Oversight / NHS	
FHWA PROJECT OF DIVISION INTEREST	■ NO □ YES
NATIONAL HIGHWAY SYSTEM?	■ NO □ YES

DEPARTMENT OF TRANSPORTATION
STATE OF COLORADO
TOWN OF SUPERIOR

HIGHWAY CONSTRUCTION BID PLANS OF PROPOSED

FEDERAL AID PROJECT NO. TAP M258-003

SUPERIOR TRAIL - BRT TO COAL CREEK

BOULDER COUNTY

CONSTRUCTION PROJECT CODE NO. 20671

Related Projects:	
US 36 PROJECT:	NH 0361-103
Project Number	
Project Code:	18907

R.O.W. Projects:
R.O.W. Project Description
XXXXXXXXXXXXXXX

TABULATION OF LENGTH & DESIGN DATA

STATION	FEET TRAIL CONNECTION-2
BEGIN OF PROJECT STA. 98+34.91 END OF PROJECT STA. 111+96.42	1361.51
TOTAL	1361.51
SUMMARY OF PROJECT LENGTH	FEET
ROADWAY (NET LENGTH) MAJOR STRUCTURE	
PROJECT GROSS LENGTH	1361.51

DESIGN DATA	TRAIL CONNECTION-2
MINIMUM RADIUS OF CURVE	41 FT.
MAXIMUM GRADE	4.53%
MINIMUM S.S.D. HORIZONTAL	305 FT.
MINIMUM DESIGN SPEED	14 MPH

PROJECT LOCATION MAP

SHEET NO.	SUBSET	INDEX OF SHEETS
1	TS-1	INDEX OF PLANS
2	SP-1	STANDARD PLAN LIST
3-4	G-1 TO G-2	GENERAL NOTES
5	TYP-1	TYPICAL SECTION
6-8	SAQ-1 TO SAQ-3	SUMMARY OF APPROXIMATE QUANTITIES
9	TAB-1	TABULATION SHEET
10	ST-1	SURVEY TABULATION
11	GEO-1	GEOMETRIC LAYOUT
12-13	PLN-1 TO PLN-2	PLAN SHEETS
14-15	PR-1 TO PR-2	PROFILE SHEETS
16	DT-1	ROADWAY DETAIL
17	DD-1	DRAINAGE DETAIL
18	DR-1	DRAINAGE PLAN
19-20	DP-1 TO DP-2	DRAINAGE PROFILES
21-24	EI-1 TO EI-4	INITIAL GRADING/EROSION CONTROL PLAN
25-28	EN-1 TO EN-4	INTERIM GRADING/EROSION CONTROL PLAN
29-32	EF-1 TO EF-4	FINAL GRADING/EROSION CONTROL PLAN
33-35	GN-1 TO GN-3	GRADING/EROSION CONTROL PLAN NOTES
36-37	UTL-1 TO UTL-2	UTILITY PLAN SHEETS
38-39	LN-1 TO LN-2	LANDSCAPE SCHEDULE AND NOTES, DETAILS
40-44	L-1 TO L-5	LANDSCAPE PLANS
45-54	IR1.1 TO IR1.10	IRRIGATION PLANS
55-62	XS-1 TO XS-8	CROSS SECTIONS
		CDOT STANDARD PLANS

ADVERTISEMENT PLANS
JUNE 15, 2016

kat
6/15/2016 9:00:07 AM
DGN MODEL:CDOT Default
I:\113166-02 - Superior Trail-BRT\15D002\

Print Date: 6/15/2016	Sheet Revisions		
File Name: 15D002DES_TitleSht.dgn	Date:	Comments	Init.
Horiz. Scale: 1:600 Vert. Scale: As Noted			
Unit Information Unit Leader Initials			

Town of Superior

CDOT CO Region 4
10601 W. 10th Street
Greeley, CO 80634

LHN

As Constructed	Contract Information	Project No./Code
No Revisions:	Contractor:	TAP M258-003
Revised:	Resident Engineer:	20671
Void:	Project Engineer:	Sheet Number 1
	PROJECT STARTED: / / ACCEPTED: / /	
	Comments:	

PLAN NUMBER	NEW OR REVISED	M STANDARD TITLE	PAGE NUMBER
M-100-1		STANDARD SYMBOLS (3 SHEETS)	1-3
M-100-2		ACRONYMS AND ABBREVIATIONS (4 SHEETS)	4-7
M-203-1	▭	APPROACH ROADS (REVISED ON JULY 08, 2013)	~~8~~
M-203-2		DITCH TYPES	9
M-203-11		SUPERELEVATION CROWNED AND DIVIDED HIGHWAYS (3 SHEETS)	10-12
M-203-12		SUPERELEVATION STREETS (2 SHEETS)	13-14
M-206-1		EXCAVATION AND BACKFILL FOR STRUCTURES (2 SHEETS)	15-16
M-206-2		EXCAVATION AND BACKFILL FOR BRIDGES (2 SHEETS)	17-18
M-208-1	■	TEMPORARY EROSION CONTROL (11 SHEETS) (REVISED ON MARCH 29, 2016)	~~19-30~~
M-210-1		MAILBOX SUPPORTS (2 SHEETS)	31-32
M-214-1		PLANTING DETAILS	33
M-216-1	▭	SOIL RETENTION COVERING (2 SHEETS) (NEW ON JULY 16, 2015)	
M-412-1	▭	CONCRETE PAVEMENT JOINTS (5 SHEETS) (REVISED ON JULY 24, 2012)	~~34-38~~
M-510-1		STRUCTURAL PLATE PIPE H-20 LOADING	39
M-601-1	▭	SINGLE CONCRETE BOX CULVERT (2 SHEETS) (REVISED ON NOVEMBER 25, 2015)	~~40-41~~
M-601-2	▭	DOUBLE CONCRETE BOX CULVERT (2 SHEETS) (REVISED ON NOVEMBER 25, 2015)	~~42-43~~
M-601-3	▭	TRIPLE CONCRETE BOX CULVERT (2 SHEETS) (REVISED ON NOVEMBER 25, 2015)	~~44-45~~
M-601-10		HEADWALL FOR PIPES	46
M-601-11		TYPE "S" SADDLE HEADWALLS FOR PIPE	47
M-601-12		HEADWALLS AND PIPE OUTLET PAVING	48
M-601-20		WINGWALLS FOR PIPE OR BOX CULVERTS	49
M-603-1	▭	METAL PIPE (4 SHEETS). (REVISED ON OCTOBER 02, 2014)	~~50-53~~
M-603-2	■	REINFORCED CONCRETE PIPE. (REVISED ON OCTOBER 02, 2014)	~~54~~
M-603-3		PRECAST CONCRETE BOX CULVERT	55
M-603-4	▭	CORRUGATED POLYETHYLENE PIPE (AASHTO M294) (REVISED ON OCT. 02, 2014).	~~56~~
M-603-5	▭	POLYVINYL CHLORIDE (PVC) PIPE (AASHTO M304). (REVISED ON OCT. 02, 2014).	~~57~~
M-603-6	▭	STEEL REINFORCED POLYETHYLENE RIBBED PIPE (AASHTO MP 20) (NEW ON APRIL 30, 2015)	
M-603-10		CONCRETE AND METAL END SECTIONS (2 SHEETS)	58-59
M-604-10		INLET, TYPE C	60
M-604-11		INLET, TYPE D	61
M-604-12		CURB INLET TYPE R (2 SHEETS)	62-63
M-604-13		CONCRETE INLET TYPE 13	64
M-604-20		MANHOLES (3 SHEETS)	65-67
M-604-25		VANE GRATE INLET (5 SHEETS)	68-72
M-605-1		SUBSURFACE DRAINS	73
M-606-1	▭	GUARDRAIL TYPE 3 W-BEAM (20 SHEETS) (REVISED ON OCTOBER 27, 2014)	~~74-92~~
M-606-1	▭	MIDWEST GUARDRAIL SYSTEM (MGS) TYPE 3 W-BEAM 31 INCHES (20 SHEETS) (REVISED ON DECEMBER 29, 2015)	
M-606-13	▭	GUARDRAIL TYPE 7 F-SHAPE BARRIER (4 SHEETS) (REVISED ON AUGUST 30, 2013)	~~93-96~~
M-606-14		PRECAST TYPE 7 CONCRETE BARRIER (3 SHEETS)	97-99

PLAN NUMBER	NEW OR REVISED	M STANDARD TITLE	PAGE NUMBER
M-607-1		WIRE FENCES AND GATES (3 SHEETS)	100-102
M-607-2		CHAIN LINK FENCE (3 SHEETS)	103-105
M-607-3		BARRIER FENCE	106
M-607-4	▭	DEER FENCE, GATES, AND GAME RAMPS (5 SHEETS) (REVISED ON APRIL 30, 2015)	~~107-109~~
M-607-10		PICKET SNOW FENCE	110
M-607-15		ROAD CLOSURE GATE (9 SHEETS)	111-119
M-608-1	▭	CURB RAMPS (7 SHEETS) (REVISED ON JUNE 16, 2014)	~~120-125~~
M-609-1	■	CURBS, GUTTERS, AND SIDEWALKS (4 SHEETS) (REVISED ON JULY 24, 2012).	~~126-129~~
M-611-1		CATTLE GUARD (2 SHEETS)	130-131
M-611-2	▭	DEER GUARD (2 SHEETS) (NEW ON APRIL 30, 2015)	
M-613-1		ROADWAY LIGHTING (4 SHEETS)	132-135
M-614-1		RUMBLE STRIPS (3 SHEETS)	136-138
M-614-2		SAND BARREL ARRAYS (2 SHEETS)	139-140
M-615-1		EMBANKMENT PROTECTOR TYPE 3	141
M-615-2		EMBANKMENT PROTECTOR TYPE 5	142
M-616-1		INVERTED SIPHON	143
M-620-1		FIELD LABORATORY CLASS 1	144
M-620-2		FIELD LABORATORY CLASS 2 (2 SHEETS)	145-146
M-620-11		FIELD OFFICE CLASS 1	147
M-620-12		FIELD OFFICE CLASS 2	148
M-629-1		SURVEY MONUMENTS (2 SHEETS)	149-150

COLORADO
DEPARTMENT OF TRANSPORTATION

M&S STANDARDS PLANS LIST

July 04, 2012

Revised on May 24, 2016

ALL OF THE M&S STANDARD PLANS, AS SUPPLEMENTED AND REVISED, APPLY TO THIS PROJECT WHEN USED BY DESIGNATED PAY ITEM OR SUBSIDIARY ITEM.

NEW OR REVISED STANDARD PLAN SHEETS APPLICABLE TO THIS PROJECT, INDICATED BY A MARKED BOX ■, WILL BE ATTACHED TO THE PLANS.

PLAN NUMBER	NEW OR REVISED	S STANDARD TITLE	PAGE NUMBER
S-612-1		DELINEATOR INSTALLATIONS (7 SHEETS)	151-157
S-614-1	▭	GROUND SIGN PLACEMENT (2 SHEETS) (REVISED ON DECEMBER 12, 2014).	~~158-159~~
S-614-2		CLASS I SIGNS	160
S-614-3		CLASS II SIGNS	161
S-614-4	▭	CLASS III SIGNS (3 SHEETS) (REVISED ON DECEMBER 17, 2014)	~~162-164~~
S-614-5		BREAK-AWAY SIGN SUPPORT DETAILS FOR GROUND SIGNS (2 SHEETS)	165-166
S-614-6	▭	CONCRETE FOOTINGS AND SIGN ISLANDS FOR CLASS III SIGNS (2 SHEETS) (REVISED ON SEPTEMBER 16, 2013)	~~167-168~~
S-614-8	▭	TUBULAR STEEL SIGN SUPPORT DETAILS (6 SHEETS) (REVISED ON OCTOBER 23, 2014)	~~169-173~~
S-614-9		PEDESTRIAN PUSH BUTTON POST ASSEMBLY	174
S-614-10		MARKER ASSEMBLY INSTALLATIONS	175
S-614-11		MILEPOST SIGN DETAIL FOR HIGH SNOW AREAS	176
S-614-12		STRUCTURE NUMBER INSTALLATION	177
S-614-14		FLASHING BEACON AND SIGN INSTALLATIONS (3 SHEETS)	178-180
S-614-20		TYPICAL POLE MOUNT SIGN INSTALLATIONS	181
S-614-21		CONCRETE BARRIER SIGN POST INSTALLATIONS (REVISED ON MAY 24, 2016)	182
S-614-22		TYPICAL MULTI-SIGN INSTALLATIONS	183
S-614-40	▭	TYPICAL TRAFFIC SIGNAL INSTALLATION DETAILS (5 SHEETS) (REVISED ON APRIL 2, 2015)	~~184-188~~
S-614-40A	▭	ALTERNATIVE TRAFFIC SIGNAL INSTALLATION DETAILS (4 SHEETS) (REVISED ON APRIL 2, 2015)	~~189-192~~
S-614-41	▭	TEMPORARY SPAN WIRE SIGNALS (REVISED ON APRIL 2, 2015)	~~193~~
S-614-42		CABINET FOUNDATION DETAIL (4 SHEETS)	194-197
S-614-43		TRAFFIC LOOP AND MISCELLANEOUS SIGNAL DETAILS (10 SHEETS)	198-207
S-614-44	▭	PEDESTAL POLE SIGNALS (2 SHEETS) (REVISED ON NOVEMBER 03, 2014)	
S-614-50	▭	STATIC SIGN MONOTUBE STRUCTURES (12 SHEETS) (REVISED ON NOVEMBER 28, 2012)	~~208-219~~
S-614-60	▭	DYNAMIC SIGN MONOTUBE STRUCTURES (14 SHEETS) (REVISED ON NOVEMBER 28, 2012)	~~220-233~~
S-627-1	▭	PAVEMENT MARKINGS (5 SHEETS) (REVISED ON JUNE 10, 2014)	~~234-238~~
S-630-1	■	TRAFFIC CONTROLS FOR HIGHWAY CONSTRUCTION (24 SHEETS) (REVISED ON DECEMBER 08, 2014)	~~239-258~~
S-630-2		BARRICADES, DRUMS, CONCRETE BARRIERS (TEMP) AND VERTICAL PANELS	259
S-630-3		FLASHING BEACON (PORTABLE) DETAILS	260
S-630-4		STEEL SIGN SUPPORT (TEMPORARY) INSTALLATION DETAILS (2 SHEETS)	261-262
S-630-5	▭	PORTABLE RUMBLE STRIPS (TEMPORARY) (2 SHEETS) (REVISED ON AUGUST 13, 2015)	~~263-264~~
S-630-6		EMERGENCY PULL-OFF AREA (TEMPORARY)	265
S-630-7		ROLLING ROADBLOCKS FOR TRAFFIC CONTROL (3 SHEETS)	266-268

Computer File Information		
Creation Date: 07/04/12	Initials: JBK	
Last Modification Date: 05/24/16	Initials: LTA	(R-X)
Full Path: www.coloradodot.info/business/designsupport		(R-X)
Drawing File Name: Standards Plans List.dgn		(R-X)
CAD Ver.: MicroStation V8 Scale: Not to Scale Units: English		(R-X)

Sheet Revisions	
Date:	Comments

Colorado Department of Transportation
4201 East Arkansas Avenue
CDOT HQ, 4th Floor
Denver, CO 80222
Phone: 303-757-9021 FAX: 303-757-9868
Division of Project Support JBK/LTA

STANDARDS PLANS LIST

Issued By: Project Development Branch July 4, 2012

STANDARD PLAN NO.

STANDARDS PLANS LIST

Sheet No. 1 of 1

GENERAL NOTES

1. ALL MATERIALS, WORKMANSHIP, AND CONSTRUCTION OF PUBLIC IMPROVEMENTS ON THIS PROJECT SHALL MEET OR EXCEED THE STANDARDS AND SPECIFICATIONS SET FORTH IN THE SUBDIVISION AND LAND DEVELOPMENT REGULATIONS PERTAINING TO THE TOWN OF SUPERIOR, AND THE COLORADO DEPARTMENT OF TRANSPORTATION (CDOT) STANDARD SPECIFICATIONS AND STANDARD PLANS. IF THE TOWN OF SUPERIOR AND CDOT STANDARDS ARE IN CONFLICT, THE MORE STRINGENT STANDARD OR DETAIL SHALL APPLY AS DETERMINED BY THE TOWN OF SUPERIOR REPRESENTATIVE.

2. ALL REFERENCES TO ANY PUBLISHED STANDARDS SHALL REFER TO THE LATEST REVISION OF SAID STANDARD, UNLESS SPECIFICALLY STATED OTHERWISE.

3. THE CONTRACTOR SHALL HAVE ONSITE AT ALL TIMES, ONE (1) COPY OF THE APPROVED PLANS, ONE (1) COPY OF THE APPROPRIATE STANDARDS AND SPECIFICATIONS, ONE (1) COPY OF THE APPROVED TRAFFIC CONTROL PLAN, AND A COPY OF ANY PERMITS AND EXTENSION AGREEMENTS NEEDED FOR THIS PROJECT.

4. THE CONTRACTOR IS RESPONSIBLE FOR PROVIDING ALL LABOR AND MATERIALS NECESSARY FOR THE COMPLETION OF THE INTENDED IMPROVEMENTS AS SHOWN ON THESE DRAWINGS, OR DESIGNATED TO BE PROVIDED, INSTALLED, OR CONSTRUCTED, UNLESS SPECIFICALLY NOTED OTHERWISE.

5. AFTER FINAL ACCEPTANCE BY THE TOWN OF SUPERIOR, ALL PUBLIC IMPROVEMENTS DEPICTED IN THESE PLANS SHALL BE GUARANTEED BY THE CONTRACTOR TO BE FREE FROM MATERIAL AND WORKMANSHIP DEFECTS FOR A PERIOD OF TWO YEARS FROM THE DATE OF ACCEPTANCE.

6. IF DURING THE CONSTRUCTION PROCESS, CONDITIONS ARE ENCOUNTERED WHICH COULD INDICATE A SITUATION THAT IS NOT IDENTIFIED IN THE PLANS OR SPECIFICATIONS, THE CONTRACTOR SHALL STOP WORK AND CONTACT THE TOWN OF SUPERIOR REPRESENTATIVE IMMEDIATELY.

7. THE CONTRACTOR SHALL BE RESPONSIBLE FOR ALL ASPECTS OF SAFETY FOR THE CONSTRUCTION PERSONNEL AND FOR THE GENERAL PUBLIC DURING THE DURATION OF THIS PROJECT, INCLUDING BUT NOT LIMITED TO: EXCAVATION, TRENCHING, SHORING, TRAFFIC CONTROL, PEDESTRIANS, AND SECURITY. THE CONTRACTOR SHALL REFER TO OSHA PUBLICATION 2226, EXCAVATION AND TRENCHING.

8. THE CONTRACTOR SHALL NOTIFY ALL AFFECTED PROPERTY OWNERS AT LEAST 48 HOURS IN ADVANCE OF ANY WORK ADJACENT TO THEIR PROPERTY. THE CONTRACTOR SHALL MAINTAIN ALL EXISTING ACCESS LOCATIONS TO ALL PROPERTIES AT ALL TIMES UNLESS THE CONTRACTOR OBTAINS PERMISSION IN WRITING FROM THE AFFECTED OWNER THAT AN ACCESS CAN BE CLOSED FOR A DESIGNATED PERIOD OF TIME.

9. THE CONTRACTOR SHALL BE RESPONSIBLE FOR RECORDING UP TO DATE AS-CONSTRUCTED INFORMATION ON A SET OF RECORD DRAWINGS THAT ARE TO BE KEPT ON THE CONSTRUCTION SITE AT ALL TIMES. THE AS-CONSTRUCTED DRAWINGS ARE TO BE MADE AVAILABLE TO THE TOWN OF SUPERIOR REPRESENTATIVE AT ANY TIME. AS-CONSTRUCTED DRAWINGS NOT TO BE PAID FOR SEPARATELY, BUT TO BE INCLUDED IN THE WORK.

10. THE CONTRACTOR IS SPECIFICALLY CAUTIONED THAT THE LOCATIONS AND / OR ELEVATIONS OF EXISTING UTILITIES AS SHOWN ON THESE PLANS ARE BASED ON RECORDS OF THE VARIOUS UTILITY COMPANIES AND WHERE POSSIBLE, MEASUREMENTS WERE TAKEN IN THE FIELD. THIS INFORMATION IS NOT TO BE RELIED UPON AS BEING EXACT OR COMPLETE. THE CONTRACTOR SHALL CONTACT THE UTILITY NOTIFICATION CENTER OF COLORADO (UNCC) AT 811, AT LEAST TWO (2) WORKING DAYS PRIOR TO BEGINNING ANY WORK, PARTICULARLY ANY EXCAVATION OR GRADING, TO HAVE ALL REGISTERED UTILITY LOCATIONS MARKED. THE UN-REGISTERED UTILITIES ARE TO BE LOCATED BY THE CONTRACTOR BY CONTACTING THE RESPECTIVE REPRESENTATIVES OF EACH UTILITY. ALL UTILITY SERVICE LATERALS ARE ALSO TO BE LOCATED BY THE CONTRACTOR PRIOR TO BEGINNING ANY EXCAVATION OR GRADING.

11. THE CONTRACTOR SHALL BE RESPONSIBLE FOR PROTECTING ALL UTILITIES DURING THE CONSTRUCTION AND FOR COORDINATING WITH THE APPROPRIATE UTILITY COMPANY REPRESENTATIVES FOR ANY UTILITY CROSSINGS REQUIRED. ALL COST TO REPAIR DAMAGED UTILITIES TO BE PAID FOR BY THE CONTRACTOR.

12. THE CONTRACTOR SHALL COORDINATE AND COOPERATE WITH ALL TOWN OF SUPERIOR PERSONNEL AND ALL UTILITY COMPANY REPRESENTATIVES INVOLVED, WITH REGARD TO RELOCATIONS, ADJUSTMENTS, EXTENSIONS, AND RE-ARRANGEMENTS OF EXISTING UTILITIES DURING CONSTRUCTION, AND TO ASSURE THAT ALL WORK IS ACCOMPLISHED IN A TIMELY FASHION AND WITH A MINIMUM DISRUPTION OF SERVICE. THE CONTRACTORS SHALL BE RESPONSIBLE FOR CONTACTING, IN ADVANCE, ALL PARTIES AFFECTED BY ANY DISRUPTIONS OF ANY UTILITY SERVICE AS WELL AS FOR THE UTILITY COMPANIES. THE CONTRACTOR IS RESPONSIBLE FOR OBTAINING AND PAYING FOR ALL REQUIRED PERMITS.

13. NO WORK MAY COMMENCE WITHIN ANY PUBLIC STORM WATER, SANITARY SEWER, OR POTABLE WATER SYSTEM UNTIL THE CONTRACTOR NOTIFIES THE RESPECTIVE UTILITY PROVIDER REPRESENTATIVE. THE NOTIFICATION SHALL BE A MINIMUM OF TWO (2) WORKING DAYS PRIOR TO THE COMMENCEMENT OF ANY WORK. AT THE DISCRETION OF THE REPRESENTATIVE OF EACH OF THE PROVIDERS, A UTILITY MEETING WILL BE HELD PRIOR TO ANY WORK AFFECTING THE UTILITIES. THE CONTRACTOR SHALL BE RESPONSIBLE FOR SCHEDULING AND PROVIDING A FACILITY FOR THESE MEETINGS, NOTIFYING THE TOWN OF SUPERIOR REPRESENTATIVE OF THE MEETINGS, AND PREPARING AND DISTRIBUTING THE MEETING MINUTES. ALL COST ASSOCIATED WITH THESE UTILITY MEETINGS WILL NOT BE PAID FOR SEPARATELY, BUT TO BE INCLUDED IN THE WORK.

14. PRIOR TO ANY CONSTRUCTION, THE CONTRACTOR SHALL CLEAR AND GRUB THE SITE. CLEARING AND GRUBBING TO BE PAID FOR AS ITEM 201 - CLEARING AND GRUBBING (LUMP SUM) AND SHALL INCLUDE REMOVAL OF ALL TRASH AND DEBRIS, VEGETATIVE AND ORGANIC MATTER, TREES OF CALIPER 4 INCHES AND LESS, BUSHES, FENCES, BARRICADES, ROCKS, AND ANY OTHER ITEMS IDENTIFIED OR NECESSARY TO BE REMOVED FOR THE CONSTRUCTION OF THE PROJECT OR AS DIRECTED BY THE TOWN OF SUPERIOR REPRESENTATIVE.

15. THE CONTRACTOR SHALL BE RESPONSIBLE FOR ENSURING THAT NO MUD OR DEBRIS LEAVES THE SITE OR IS TRACKED ONTO THE PUBLIC STREET SYSTEM. THE CONTRACTOR SHALL REMOVE ALL MUD AND DEBRIS DAILY BY AN APPROPRIATE MECHANICAL METHOD (MACHINE BROOM SWEEP, LIGHT DUTY FRONT-END LOADER, ETC.) OR AS DIRECTED AND APPROVED BY THE TOWN OF SUPERIOR REPRESENTATIVE. THE REMOVAL OF MUD AND DEBRIS WILL NOT BE PAID FOR SEPARATELY, BUT SHALL BE INCLUDED IN THE WORK.

16. UPON THE COMPLETION OF THE CONSTRUCTION, THE CONTRACTOR SHALL CLEAN AND RESTORE THE SITE TO A CONDITION EQUAL TO, OR BETTER THAN THAT WHICH EXISTED BEFORE THE CONSTRUCTION, OR TO THE GRADES AND CONDITION AS REQUIRED BY THESE PLANS.

17. ANY EXISTING FENCES, TREES, PAVEMENTS, SIDEWALKS, CURB AND GUTTERS, LANDSCAPING, STRUCTURES, SIGNS OR ANY OTHER EXISTING IMPROVEMENTS INTENDED TO REMAIN IN PLACE, THAT ARE DESTROYED, DAMAGED, OR REMOVED BY THE CONTRACTOR AS A RESULT OF THE CONSTRUCTION OF THIS PROJECT, SHALL BE REPLACED OR RESTORED BY THE CONTRACTOR IN LIKE KIND. ANY NECESSARY REPLACEMENT OR RESTORATION SHALL BE APPROVED BY THE TOWN OF SUPERIOR REPRESENTATIVE AND SHALL BE AT THE CONTRACTOR'S EXPENSE.

18. WHERE IT IS REQUIRED TO CUT EXISTING PAVEMENT, THE PAVEMENT SHALL BE SAW CUT ONLY TO THE FULL DEPTH OF THE PAVEMENT. SAW CUTTING WILL NOT BE PAID FOR SEPARATELY, BUT WILL BE CONSIDERED SUBSIDIARY TO THE REMOVAL OF THE PAVEMENT MAT.

19. THE CONTRACTOR SHALL SUBMIT A CONSTRUCTION TRAFFIC CONTROL PLAN IN ACCORDANCE WITH THE MANUAL ON UNIFORM TRAFFIC CONTROL DEVICES TO THE TOWN OF SUPERIOR FOR REVIEW AND APPROVAL PRIOR TO ANY CONSTRUCTION ACTIVITIES WITHIN OR AFFECTING TRAFFIC WITHIN ANY PUBLIC RIGHTS-OF-WAY. THE TRAFFIC CONTROL PLAN SHALL IDENTIFY THE ANTICIPATED TYPE AND LOCATION OF THE TRAFFIC CONTROL DEVICES, PROPOSED HAUL ROUTES, THE NAME OF THE TRAFFIC CONTROL SUPERVISOR, AND ANY ANTICIPATED NEEDS FOR FLAGGING. THE CONTRACTOR SHALL BE RESPONSIBLE FOR PROVIDING ALL TRAFFIC CONTROL DEVICES FOR THE DURATION OF THE PROJECT REQUIRED BY THE CONSTRUCTION ACTIVITIES OR AS DIRECTED BY THE TOWN OF SUPERIOR REPRESENTATIVE. THE CONTRACTOR SHALL MODIFY THE TRAFFIC CONTROL, INCLUDING ADDING ADDITIONAL DEVICES DURING CONSTRUCTION AS NECESSARY OR AS DIRECTED BY THE TOWN OF SUPERIOR REPRESENTATIVE. ALL TRAFFIC CONTROL DEVICES NO LONGER REQUIRED SHALL BE REMOVED FROM THE SITE.

20. THE CONTRACTOR SHALL COMPLY WITH ALL TERMS AND CONDITIONS OF THE COLORADO PERMIT FOR STORM WATER DISCHARGE (CDPS PERMIT), THE STORM WATER MANAGEMENT PLAN, TOWN OF SUPERIOR SEDIMENT AND EROSION CONTROL STANDARDS, AND THE EROSION CONTROL PLAN. THE CONTRACTOR SHALL APPLY FOR AND HOLD THE CDPS PERMIT.

21. ALL STRUCTURAL EROSION CONTROL MEASURES SHALL BE INSTALLED AT THE APPROVED LOCATIONS AND AT AREAS OF DISTURBED SOIL BOTH ON-SITE AND OFF-SITE PRIOR TO ANY OTHER GROUND DISTURBING ACTIVITY. ALL EROSION CONTROL MEASURES SHALL BE MAINTAINED IN GOOD REPAIR BY THE CONTRACTOR UNTIL SUCH TIME AS THE ENTIRE DISTURBED AREAS ARE STABILIZED WITH HARD SURFACE OR LANDSCAPING. TO MITIGATE THE EROSION, THE CONTRACTOR SHALL USE STANDARD EROSION CONTROL TECHNIQUES DESCRIBED IN THE CDOT STANDARD SPECIFICATIONS FOR ROAD AND BRIDGE CONSTRUCTION, THE CDOT M & S STANDARDS, TOWN OF SUPERIOR STANDARDS, AND THE CDOT EROSION CONTROL AND STORM QUALITY GUIDE.

22. THE CONTRACTOR SHALL BE RESPONSIBLE FOR ROUTING THE STORM AND IRRIGATION FLOWS THROUGH THE SITE AND FOR MANAGING THE STORM WATER WITHIN THE CONSTRUCTION SITE AND FOR PROTECTING ALL PUBLIC AND PRIVATE PROPERTY.

23. UNLESS OTHERWISE NOTED, ALL STATIONS, DIMENSIONS AND ELEVATIONS AT THE CURB AND GUTTER ARE TO THE PANLINE (LIP).

24. ANY LAYER OF BITUMINOUS PAVEMENT THAT IS TO HAVE A SUCCEEDING LAYER PLACED THEREON SHALL BE COMPLETED FULL WIDTH BEFORE SUCCEEDING LAYER IS PLACED.

25. CUTTING OR PATCHING OF PERMANENT PAVEMENT WILL NOT BE PERMITTED WITHOUT THE APPROVAL OF ENGINEER.

26. REMOVAL OF ASPHALT MAT, CONCRETE PAVEMENT, CURB AND GUTTER, AND/OR SIDEWALK REQUIRED ON THIS PROJECT SHALL BE SAW CUT TO A VERTICAL EDGE. THE COST OF SAWCUTTING SHALL BE INCLUDED IN THE WORK.

27. FOR PRELIMINARY PLAN QUANTITIES, THE FOLLOWING RATES OF APPLICATION WERE USED:

    DILUTED EMULSIFIED ASPHALT
    (SLOW-SETTING)AT 0.10 GAL. PER SQ. YD (DILUTED)
    BITUMINOUS PAVEMENTAT 110 LBS. PER SQ. YD. PER 1" THICKNESS
    AGGREGATE BASE COURSE (ABC) AT 133 LBS. PER SQ. FT.

    WHEN ORDERED BY THE ENGINEER, A TACK COAT OF EMULSIFIED ASPHALT (SLOW-SETTING) IS TO BE APPLIED BETWEEN PAVEMENT COURSES TO IMPROVE THE BOND. DILUTED EMULSIFIED ASPHALT FOR TACK SHALL CONSIST OF 1 PART EMULSIFIED ASPHALT AND 1 PART WATER.

    FINAL RATES OF APPLICATION SHALL BE DETERMINED BY THE ENGINEER AT THE TIME OF APPLICATION.

28. WATER SHALL BE USED AS A DUST PALLIATIVE WHERE REQUIRED. LOCATIONS SHALL BE AS ORDERED BY THE TOWN OF SUPERIOR OR THEIR REPRESENTATIVE AND WILL NOT BE PAID FOR SEPARATELY.

    DEPTH OF MOISTURE - DENSITY CONTROL FOR THIS PROJECT SHALL BE AS FOLLOWS:

    FULL DEPTH OF ALL EMBANKMENTS BASES OF CUTS AND FILLS = 12 INCHES

    EXCAVATION REQUIRED FOR COMPACTION OF BASES OF CUTS AND FILLS WILL BE CONSIDERED SUBSIDIARY TO THAT OPERATION AND WILL NOT BE PAID FOR SEPARATELY.

    THE TYPE OF COMPACTION FOR EARTHWORK ON THIS PROJECT SHALL BE AASHTO T-99.

29. EXISTING RIGHT-OF-WAY INFORMATION AS SHOWN ON THE PLAN SHEETS ARE PLOTTED FROM THE BEST INFORMATION AVAILABLE.

GENERAL NOTES (CONT.)

30. THE CONTRACTOR SHALL PERFORM CONSTRUCTION ACTIVITIES TO AVOID UNNECESSARY IMPACTS TO EXISTING VEGETATION, INCLUDING TREES AND SHRUBS. PROTECTIVE FENCING WILL BE USED TO IDENTIFY THESE AREAS, AS NOTED ON THE EROSION CONTROL SHEETS. ANY DISTURBANCE BEYOND THESE LIMITS SHALL BE RESTORED TO ORIGINAL CONDITIONS BY THE CONTRACTOR AT THEIR OWN EXPENSE. TREES NOT DESIGNATED FOR REMOVAL WILL BE PROTECTED BY CHAIN LINK FENCE. LOCATION OF TREE PROTECTION SHALL BE DIRECTED BY THE LANDSCAPE ARCHITECT AND ENGINEER. THE CONTRACTOR SHALL NOT PARK ANY VEHICLES OR EQUIPMENT OR DISTURB ANY AREA NOT APPROVED BY THE PROJECT MANAGER.

31. IN THE EVENT THAT PROJECT PERSONNEL ENCOUNTER UNKNOWN SOIL OR GROUNDWATER CONTAMINATION, CONSTRUCTION ACTIVITIES SHOULD CEASE IMMEDIATELY AND THE PROCEDURES OUTLINED IN THE CDOT STANDARD SPECIFICATIONS FOR ROAD AND BRIDGE CONSTRUCTION 250.03 SHALL BE FOLLOWED.

32. REFER TO LANDSCAPE PLANS FOR PLANTING INFORMATION.

33. IN ACCORDANCE WITH SECTION 630.10 OF THE STANDARD SPECIFICATIONS, THIS PROJECT IS CLASSIFIED AS A NON-SIGNIFICANT PROJECT.

34. THIS PROJECT REQUIRES STRICT COMPLIANCE WITH CDOT "BUY AMERICA" REQUIREMENTS. SEE STANDARD SPECIFICATION SECTION 106, BUY AMERICA REQUIREMENTS.

UTILITIES

THE FOLLOWING IS A LIST OF KNOWN UTILITIES WITH SERVICES WITHIN THE PROJECT LIMITS.

TOWN OF SUPERIOR SANITARY SEWER
ED JOHNSON - FIELD MAINTENANCE SUPERINTENDENT
124 E COAL CREEK DRIVE
SUPERIOR, CO 80027
(303) 709-6727

COMCAST
KEVIN YOUNG
6850 S TUSCAN WAY
ENGLEWOOD, CO 80110
(720) 281-8666
Kevin_Young@cable.comcast.com

CDOT ITS
MATTHEW RICKARD
425C CORPORATE CIRCLE
GOLDEN, CO 80401
(303) 512-5834
Matthew.Rickard@state.co.us

UTILITY INFORMATION SHOWN IS PLOTTED FROM THE BEST AVAILABLE DATA. THE CONTRACTOR IS RESPONSIBLE FOR MAKING THEIR OWN DETERMINATION AS TO THE TYPE AND LOCATION OF UTILITIES AS MAY BE NECESSARY TO AVOID DAMAGE THERETO. CONTACT UTILITY NOTIFICATION CENTER OF COLORADO AT 811 FOR UTILITY LOCATIONS AT LEAST 48 HOURS PRIOR TO EXCAVATING.

STANDARD ABBREVIATION/DEFINITIONS

THE FOLLOWING IS A LIST OF ABBREVIATIONS USED IN THE CONTRACT DOCUMENTS:

HCL - HORIZONTAL CONTROL LINE
PGL - PROFILE GRADE LINE
HMA - HOT MIX ASPHALT
NTS - NOT TO SCALE
ROW - RIGHT OF WAY
RCP - REINFORCED CONCRETE PIPE
POB - POINT OF BEGINNING
POE - POINT OF ENDING
PVC - POLYVINYL CHLORIDE PIPE
PI - POINT OF INTERSECTION
PC - POINT OF CURVATURE
PT - POINT OF TANGENT
PVI - VERTICAL POINT OF INTERSECTION
PVC - VERTICAL POINT OF CURVATURE
PVT - VERTICAL POINT OF TANGENT
NC - NORMAL CROWN
NIC - NOT IN CONTRACT
LOC - LIMITS OF CONSTRUCTION
POSS - POINT OF SLOPE SELECTION

TOWN OF SUPERIOR SEDIMENT AND EROSION CONTROL NOTES

THE CONTRACTOR SHALL BE RESPONSIBLE FOR SEDIMENT AND EROSION CONTROL AT THE SITE THROUGHOUT CONSTRUCTION

PERIMETER SILT FENCE SHALL BE INSTALLED PRIOR TO ANY LAND DISTURBING ACTIVITY (STOCKPILING, STRIPPING, GRADING, ETC.)

BEST MANAGEMENT PRACTICES (BMPs) SHALL BE USED AS NECESSARY TO ADDRESS SEDIMENT AND DUST FROM SITE DISTURBANCE. ADDITIONAL MEASURES BAY BE REQUIRED AT THE DIRECTION OF THE ENGINEER.

BMPs MAY INCLUDE BUT ARE NOT LIMITED TO:

MINIMAL DISTURBANCE FOR TIME PERIODS
GRAVEL CONSTRUCTION ENTRIES
SILT FENCE, STRAW BALE OR SAND BAG BARRIERS, ROCK CHECK DAMS
STORM SEWER INLET PROTECTION
SEDIMENT CAPTURE PONDS
SITE WATERING FOR DUST SUPRESSION

BMPs SHALL BE MAINTAINED AND KEPT IN GOOD REPAIR FOR THE DURATION OF THE PROJECT. THE CONTRACTOR SHALL INSPECT BMPS WEEKLY AND AFTER SIGNIFICANT (GREATER THAN 0.1" PRECIPITATION) STORM EVENTS. THE MAINTENANCE AND REPAIR SHALL BE COMPLETED IN A TIMELY MANNER. SEDIMENT AND DEBRIS SHALL BE REMOVED WHEN THEY REACH HALF THE BMP HEIGHT OR IMPACT THE FUNCTION OF THE BMP.

SOIL STOCKPILES SHALL BE PROTECTED FROM SEDIMENT TRANSPORT BY SURFACE ROUGHENING, WATERING AND PERIMETER SILT FENCING. SOILS THAT WILL BE STOCKPILED FOR MORE THAN 30 DAYS SHALL BE MULCHED AND SEEDED WITH A GRASS COVER WITHIN 14 DAYS OF STOCKPILE CONSTRUCTION.

THE CONTRACTOR SHALL INSURE THAT ALL LOADS OF CUT AND FILL SOILS IMPORTED TO OR EXPORTED FROM THE SITE ARE PROPERLY LOADED AND COVERED TO PREVENT LOSS DURING TRANSPORT.

THE CONTRACTOR SHALL REMOVE ALL SEDIMENT, MUD, AND CONSTRUCTION DEBRIS RESULTING FROM THIS PROJECT FROM FLOWLINES AND PAVEMENT OF PUBLIC STREETS IN A TIMELY MANNER.

SOILS EXPOSED DURING LAND DISTURBING ACTIVITY SHALL BE KEPT IN A ROUGHENED CONDITION BY RIPPING OR DISCING ALONG LAND CONTOURS UNTIL MULCH, VEGETATION OR OTHER PERMANENT EROSION CONTROL IS IN PLACE. NO SOILS SHALL REMAIN EXPOSED BY LAND DISTURBING ACTIVITY FOR MORE THAN THIRTY (30) DAYS BEFORE REQUIRED TEMPORARY OR PERMANENT EROSION CONTROL IS INSTALLED UNLESS OTHERWISE APPROVED.

VEHICLE TRACKING CONTROL, INLET/OUTLET, ROCK SOCK, AND SILT FENCE PROTECTION WILL BE USED TO CONTROL EROSION DURING CONSTRUCTION.

ALL TEMPORARY SEDIMENT CONTROLS WILL BE REMOVED WITHIN 30 DAYS AFTER THE FINAL STABILIZATION IS ACHIEVED OR AFTER THE TEMPORARY MEASURES ARE NO LONGER NEEDED, WHICHEVER OCCURS FIRST.

NATURAL VEGETATION SHALL BE RETAINED AND PROTECTED WHENEVER POSSIBLE. EXPOSURE OF SOIL TO EROSION BY REMOVAL OR DISTURBANCE OF VEGETATION SHALL BE LIMITED TO THE AREA REQUIRED FOR IMMEDIATE CONSTRUCTION OPERATIONS AND FOR THE SHORTEST PRACTICAL PERIOD OF TIME.

USE CURRENT CDOT/UDFCD STANDARD DETAILS.

Know what's below. Call before you dig.

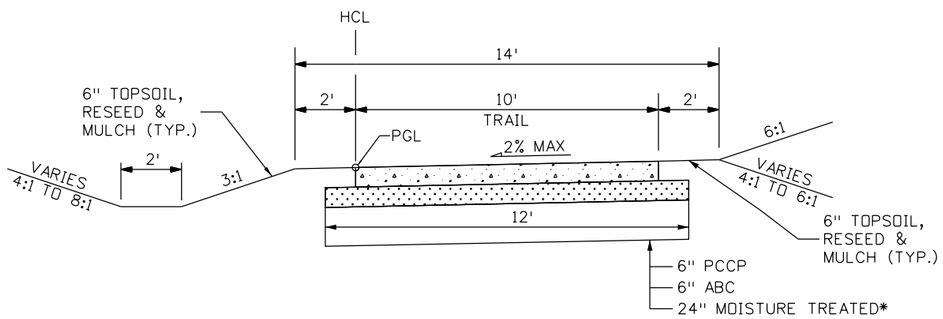

TYPICAL SECTION

STA. 98+34.91 TO STA. 102+42.34

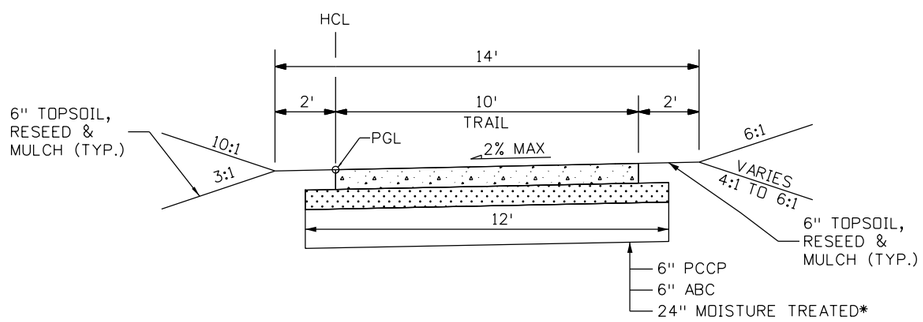

TYPICAL SECTION

STA. 102+42.34 TO STA. 111+96.42

* IN AREAS ADJACENT TO PROPOSED STORM SEWER PIPE, FOLLOW CDOT M STANDARD M-206-1. CLASS 1 FILL SHALL BE USED INSTEAD OF 24" MOISTURE TREATED BASE.

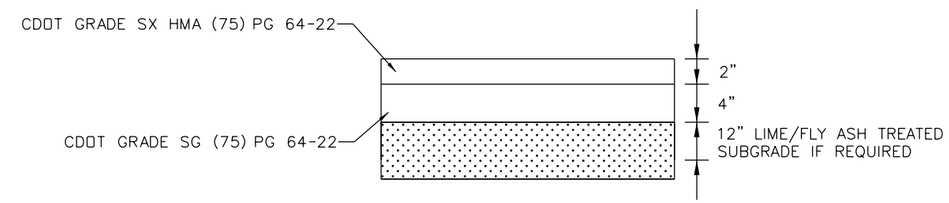

MIN. 6" PAVEMENT SECTION

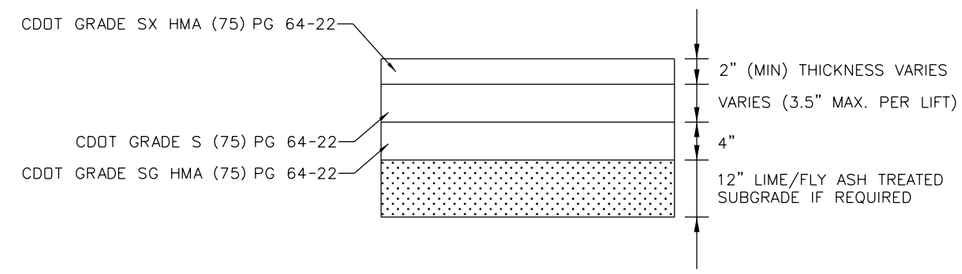

GREATER THAN 6" PAVEMENT SECTION

NOTES:

1. AVOID DRIVING OVER PIPE UNTIL FULL INSTALLATION.
2. SPECIFIC LOCATIONS OF PATCHING ARE NOT CALLED OUT IN THE PLANS; HOWEVER PATCHING MAY BE REQUIRED AS DIRECTED BY THE ENGINEER.

Ashley 8:53:44 AM 1:\113166-02 - Superior Trail-BRT\150002\Design\Drawings\15D002DES_TyplSect01.dgn

Print Date: 5/25/2016			
File Name: 15D002DES_TyplSect01.dgn			
Horiz. Scale: 1:50	Vert. Scale: As Noted		

FELSBURG HOLT & ULLEVIG
6300 South Syracuse Way
Suite 600
Centennial, CO 80111
(303) 721-1440

R-X

Sheet Revisions		
Date:	Comments	Init.

Town of Superior

CDOT Region 4
10601 W. 10th Street
Greeley, CO 80634

LHN

As Constructed			
No Revisions:			
Revised:			
Void:			

SUPERIOR TRAIL CONNECTION
TYPICAL SECTIONS

Designer:	AMO	Structure Numbers	
Detailer:	AMO		
Sheet Subset:	ROADWAY	Subset Sheets:	TYP-1 of 1

Project No./Code	
TAP M258-003	
20671	
Sheet Number	5

Know what's below. Call before you dig.

Item	Contract Item No.	Contract Item	Unit	Roadway		Drainage		Erosion Control		Landscaping		Project Totals	
				Plan	As Const.	Plan	As Const.	Plan	As Const.	Plan	As Const.	**Plan**	**As Const.**
1	201-00001	CLEARING AND GRUBBING	LS							1		1	
2	202-00015	REMOVAL OF HEADWALL	EA			2						2	
3	202-00026	REMOVAL OF SLOPE AND DITCH PAVING	SY			462						462	
4	202-04005	CLEAN VALVE BOX	EA	1								1	
5	202-04002	CLEAN CULVERT	EA					1				1	
6	203-00060	EMBANKMENT MATERIAL (CIP)	CY	1681								1681	
7	203-02330	LABORER	HR					40				40	
8	207-00205	TOPSOIL	CY							197		197	
9	208-00002	EROSION LOG (12 INCH)	LF					4080				4080	
10	208-00035	AGGREGATE BAG	LF					220				220	
11	208-00045	CONCRETE WASHOUT STRUCTURE	EA					1				1	
12	208-00051	STORM DRAIN INLET PROTECTION (TYPE 1)	LF					14				14	
13	208-00070	VEHICLE TRACKING PAD	EA					2				2	
14	208-00103	REMOVAL AND DISPOSAL OF SEDIMENT (LABOR)	HR					40				40	
15	208-00106	SWEEPING (SEDIMENT REMOVAL)	HR					16				16	
16	208-00107	REMOVAL OF TRASH	HR					8				8	
17	208-00206	EROSION CONTROL SUPERVISOR	DAY					15				15	
18	210-00001	RESET STRUCTURE	EA							1		1	
19	212-00006	SEEDING (NATIVE)	AC					0.22		0.45		0.67	
20	212-00011	SEEDING (LAWN)	AC							1.14		1.14	
21	212-00032	SOIL CONDITIONING	AC							1.81		1.81	
22	212-00048	SOIL PREPARATION (SPECIAL)	CY							74		74	
23	212-00050	SOD	SF							9520		9520	
24	212-00100	TREE RETENTION AND PROTECTION	LS							1		1	
25	213-00002	MULCHING (WEED FREE HAY)	AC							1.59		1.59	
26	213-00005	MULCHING (DECORATIVE) (1 1/2")(4" DEPTH)	CF							6413		6413	
27	213-00008	MULCHING (WOOD CHIP) (4" DEPTH) (TREE RINGS)	CF							195		195	
28	213-00061	MULCH TACKIFIER	LB							318		318	
29	213-00462	METAL LANDSCAPE BORDER (3/16 INCH X 5-1/2 INCH)	LF							810		810	
30	214-00005	LANDSCAPE MAINTENANCE (24-MONTH)	EA							1		1	
31	214-00220	DECIDUOUS TREE (2 INCH CALIPER)	EA							11		11	
32	214-00350	DECIDUOUS SHRUB (5 GALLON CONTAINER)	EA							232		232	

Know what's below. Call before you dig.

Item	Contract Item No.	Contract Item	Unit	Roadway		Drainage		Erosion Control		Landscaping		**Project Totals**	
				Plan	As Const.	Plan	As Const.	Plan	As Const.	Plan	As Const.	**Plan**	**As Const.**
33	214-00506	EVERGREEN TREE (6 FOOT) (BALL AND BURLAP)	EA							36		36	
34	214-00650	EVERGREEN SHRUB (5 GALLON CONTAINER)	EA							51		51	
35	214-00910	PERENNIALS (1 GALLON CONTAINER)	EA							1425		1425	
36	216-00101	SOIL RETENTION BLANKET (STRAW/COCONUT)	SY					157				157	
37	217-00000	HERBICIDE TREATMENT	SY							7800		7800	
38	240-00000	WILDLIFE BIOLOGIST	HR					16				16	
39	304-06000	AGGREGATE BASE COURSE (CLASS 6)	CY	266								266	
40	403-00721	HOT MIX ASPHALT (PATCHING) (ASPHALT)	SY	50								50	
41	506-00409	SOIL RIPRAP (9 INCH)	CY			1						1	
42	603-01180	18 INCH REINFORCED CONCRETE PIPE	LF			5						5	
43	603-01660	66 INCH REINFORCED CONCRETE PIPE	LF			385						385	
44	604-00305	INLET TYPE C (5 FT)	EA			1						1	
45	604-30010	MANHOLE SLAB BASE (10 FT)	EA			2						2	
46	608-00006	CONCRETE SIDEWALK (6 INCH)	SY	1543								1543	
47	619-50080	1 INCH PLASTIC PIPE	LF							3580		3580	
48	619-50100	1-1/4 INCH PLASTIC PIPE	LF							140		140	
49	619-50120	1-1/2 INCH PLASTIC PIPE	LF							40		40	
50	619-50160	2 INCH PLASTIC PIPE	LF							100		100	
51	619-50240	3 INCH PLASTIC PIPE	LF							280		280	
52	619-50320	4 INCH PLASTIC PIPE	LF							1200		1200	
53	619-50480	6 INCH PLASTIC PIPE	LF							160		160	
54	619-50480	6 INCH PLASTIC PIPE - BORED	LF							50		50	
55	623-00162	DRIP EMITTER TUBING	LF							2500		2500	
56	623-00163	MULTI-OUTLET DRIP EMITTER (TREE RING)	EA							46		46	
57	623-00168	1 INCH EMITTER VALVE ASSEMBLY	EA							6		6	
58	623-00184	1/2 INCH FLUSH UNIT	EA							11		11	
59	623-00206	6 INCH POP-UP SPRAY SPRINKLER (W/ NOZZLE)	EA							113		113	
60	623-00332	4 INCH POP-UP ROTARY SPRINKLER	EA							37		37	
61	623-03112	1-1/2 INCH AUTOMATIC CONTROL VALVE	EA							5		5	
62	623-04000	CONTROL WIRE 24 VOLT	LF							2500		2500	

Know what's below. Call before you dig.

Item	Contract Item No.	Contract Item	Unit	Roadway		Drainage		Erosion Control		Landscaping		Project Totals	
				Plan	As Const.	Plan	As Const.	Plan	As Const.	Plan	As Const.	**Plan**	**As Const.**
63	623-04008	1 INCH QUICK-COUPLER VALVE	EA							3		3	
64	623-05032	4 INCH GATE VALVE	EA							1		1	
65	625-00000	CONSTRUCTION SURVEYING	LS	1								1	
66	626-00000	MOBILIZATION	LS	1								1	
67	629-01210	ADJUST MONUMENT BOX	EA	1								1	
68	630-10005	TRAFFIC CONTROL	LS	1								1	
69	F/A 01	MINOR CONTRACT REVISIONS	EA	1								1	
70	F/A 02	PARTNERING	EA	1								1	
71	F/A 03	EROSION CONTROL	EA	1								1	
72	F/A 04	FUEL COST ADJUSTMENT	EA	1								1	

Know what's below. Call before you dig.

ROADWAY

LOCATION	EMBANKMENT MATERIAL (COMPLETE IN PLACE) (203-00060)	AGGREGATE BASE COURSE CLASS 6 (304-06000)	HOT MIX ASPHALT (PATCHING) (ASPHALT) (403-00721)	CONCRETE SIDEWALK (6 INCH) (608-00006)
	CY	CY	SY	SY
SUPERIOR TRAIL	1,681	266	50	1,543
PROJECT TOTALS:	**1,681**	**266**	**50**	**1,543**

HYDRAULICS

LOCATION	REMOVAL OF HEADWALL (202-00015)	REMOVAL OF SLOPE AND DITCH PAVING (202-00026)	SOIL RIPRAP (9 INCH) (506-00409)	18 INCH REINFORCED CONCRETE PIPE (603-01180)	66 INCH REINFORCED CONCRETE PIPE (603-01660)	INLET TYPE C (5 FT) (604-00305)
	EA	SY	CY	LF	LF	EA
SUPERIOR TRAIL	2	462	1	5	385	1
PROJECT TOTALS:	**2**	**462**	**1**	**5**	**385**	**1**

EARTHWORK

SUMMARY OF EARTHWORK QUANTITIES

EMBANKMENT MATERIAL (COMPLETE IN PLACE)(NET)		CUBIC YARDS
FOR TRAIL:	REGULAR EMBANKMENT	1,681
TOTAL		1,681
	FOR INFORMATION ONLY	
UNCLASSIFIED EXCAVATION		CUBIC YARDS
FOR TRAIL (INCLUDES MOISTURE TREATED SUBGRADE)		955
FOR CUT SLOPE TREATMENT		48
TOTAL		1,003
COMPACTION		CUBIC YARDS
TOTAL EMBANKMENT (NET)		1,681
BASES OF CUTS AND FILLS		
TOTAL		1,681
	EARTHWORK QUANTITIES BALANCE	
UNCLASSIFIED EXCAVATION		CUBIC YARDS
TOTAL UNCLASSIFIED EXCAVATION		1,003
TOTAL FROM CONTRACTOR'S SOURCE		
TOTAL		1,003
EMBANKMENT (NET)		
TOTAL		1,681
EMBANKMENT (NET) TIMES COMPACTION FACTOR	1.15	
TOTAL		1,933

Print Date: 5/25/2016
File Name: 15D002DES_Tab01.dgn
Horiz. Scale: 1:1 Vert. Scale: As Noted

FELSBURG HOLT & ULLEVIG
6300 South Syracuse Way
Suite 600
Centennial, CO 80111
(303) 721-1440

R-X

Sheet Revisions		
Date:	Comments	Init.

Town of Superior

CDOT Region 4
10601 W. 10th Street
Greeley, CO 80634

LHN

As Constructed
No Revisions:
Revised:
Void:

SUPERIOR TRAIL CONNECTION
TABULATION OF QUANTITIES

Designer: KMD
Detailer: AMO
Sheet Subset: ROADWAY
Structure Numbers
Subset Sheets: TAB-1 of 1

Project No./Code
TAP M258-003
20671
Sheet Number 9

Ashley 8:53:48 AM I:\113166-02 - Superior Trail-BRT\150002\Design\Drawings\150002DES_Tab01.dgn

TO ESTABLISH GEOMETRIC CONTROL FOR THE CONSTRUCTION OF THIS PROJECT, THE DEPARTMENT HAS PROVIDED THE FOLLOWING INFORMATION:

	Format *
■ Horizontal Control	Plan Sheet
☐ Vertical Control	
■ Roadway Alignment	
☐ Original Terrain Data	Plan Sheet
☐ Other:	

* Specify the information format, ie., plan sheet, computer disk, computer printout, or other. The information marked is either contained on the plans or is available from the Engineer.

TYPE OF PROJECT

- ■ Landscaping
- ☐ Signalization
- ☐ Safety Improvement
- ☐ Asphalt Overlay
- ☐ Concrete Overlay
- ☐ Minor Widening
- ☐ Major Reconstruction
- ☐ New Roadway Construction
- ☐ Bridge Replacement
- ☐ Bridge Widening
- ☐ New Bridge
- ■ Other: Sidewalk

SURVEY WORK TO BE PERFORMED BY OTHERS: _____

WORK PERFORMED BY THE CONTRACTOR'S SURVEYOR UNDER SECTION 625:

- ___ ☐ Establish and Maintain Project Centerline or Engineer Approved Offset Line(s)
- ___ ■ Verification and Maintenance of Horizontal and Vertical Control
- ___ ■ Verify or Determine existing grades and alignments
- ___ ■ Verify or Determine existing topography
- ___ ■ Clearing and Grubbing Limits (Section 201)
- ___ ■ Removal Limits (Section 202)
- ___ ■ Reset Items (Section 210)
- ___ ■ Excavation and Embankment (Section 203)
  - ___ ■ Excavation
    - ___ ■ Unclassified
    - ___ ☐ Stripping
    - ___ ☐ Muck
    - ___ ☐ Rock
    - ___ ☐ Borrow
    - ___ ☐ Other: _____
    - ___ ☐ Potholing
  - ___ ■ Embankment
  - ___ ■ Site Grading
  - ___ ■ Erosion Control (Perm)
  - ___ ☐ Other: _____
  - ___ ☐ As Staked Earthwork Quantities (See General Notes)

Excavation	Slope Staking (Y/N)	Grid (Y/N)	Grade Stakes	Special Interval
	-	-	-	-
	-	-	-	-
	-	-	-	-
	-	-	-	-
	-	-	-	-
	-	-	-	-

Embankment				
	-	-	-	-
	-	-	-	-
	-	-	-	-
	-	-	-	-

- ___ ■ Landscaping
  - ___ ■ Top Soil (Section 207)
  - ___ ■ Seeding (Section 212)
  - ___ ■ Mulching (Section 213)
  - ___ ■ Planting (Section 214)
  - ___ ☐ Herbicide (Section 217)
  - ___ ☐ Other: _____
- ___ ■ Erosion Control (Section 208)
  - ___ ☐ Seeding (Temp)
  - ___ ■ Silt Fence
  - ___ ☐ Erosion Bales
  - ___ ■ Erosion Logs
  - ___ ☐ Riprap (Temp)
  - ___ ☐ Other: _____
- ___ ☐ Roadway Bases
  - ___ ☐ Untreated Subgrade
  - ___ ☐ Treated Subgrade
  - ___ ☐ Aggregate Base Course (Section 304)
  - ___ ☐ Reconditioning
  - ___ ☐ PMBB - Plant Mix Bituminous Base
  - ___ ☐ Other: _____

Roadway Bases	Grid (Y/N)	Grade (Y/N)	Special Interval	Special Offset
	-	-	-	-
	-	-	-	-
	-	-	-	-
	-	-	-	-
	-	-	-	-
	-	-	-	-

- ___ ■ Pavements
  - ___ ■ HMA - Hot Mix Asphalt (Section 403)
  - ___ ☐ Concrete (Section 412)
  - ___ ☐ Heating & Scarifying Treatment
  - ___ ☐ Prime Coat, Tack Coat & Rejuvenating Agent (Section 407)
  - ___ ☐ Seal Coat or Chip Seal (Section 409)
  - ___ ☐ Other: _____

Pavements	Grid (Y/N)	Special Interval	Special Offset
	-	-	-
	-	-	-
	-	-	-
	-	-	-
	-	-	-
	-	-	-

Curb & Gutter	Tangent Interval	Curve Interval	Special Offset
	-	-	-

- ___ ■ Roadway Elements
  - ___ ■ Curb and Gutter (Section 609)
  - ___ ☐ Drop inlets - alignment and grades (Section 604)
  - ___ ☐ Retaining Walls
  - ___ ☐ Guard Rail (Section 606)
  - ___ ■ Sidewalk (Section 608)
  - ___ ☐ Overlay Stationing
  - ___ ☐ Other: _____

Stationing	Left Interval	Center Interval	Right Interval
	-	-	-

- ___ ☐ Riprap (Perm) (Section 506)
- ___ ☐ Slope and Ditch Paving (Section 507)
- ___ ■ Minor Structures
  - ___ ☐ Structure Excavation limits (Section 206)
  - ___ ☐ Culverts (Section 603)
  - ___ ☐ Culverts w/ Headwalls and Wingwalls (Section 601)
  - ___ ☐ Concrete Box Culverts w/ Headwalls and Wingwalls
  - ___ ■ Pipes (Section 603)
    - ___ ☐ Sanitary Sewer
    - ___ ■ Storm Sewer
    - ___ ☐ Water
    - ___ ☐ Irrigation
    - ___ ☐ Miscellaneous
  - ___ ■ Manholes (Section 604)
  - ___ ■ Inlets (Section 604)
  - ___ ☐ Other: _____
- ___ ☐ Major Structures - Overhead Signs (Section 614), Concrete Box Culverts, Bridges - and all other structures assigned a structure number
  - ___ ☐ Structure Excavation limits (Section 206)
  - ___ ☐ Concrete Box Culverts (Section 603) w/ Headwalls and Wingwalls (Section 601)
  - ___ ☐ Piling locations and cut off elevations (Section 502)
  - ___ ☐ Caisson locations and elevations (Section 503)
  - ___ ☐ Footing locations, alignment, and elevations
  - ___ ☐ Abutment/Pier locations, alignment, and elevations
  - ___ ☐ Wingwall skew angles/offsets
  - ___ ☐ Structural concrete form locations
  - ___ ☐ Substructure As-constructed survey required for Bridges (Subsection 601 .12) and Overhead signs (S-614-50)
  - ___ ☐ Bridge expansion joint(s) alignment and grade (longitudinal and transverse)
  - ___ ☐ Deck grades at Girder 10th or "n" th point locations and elevations
  - ___ ☐ Slope and Ditch Paving (Section 507)
  - ___ ☐ Other: _____
- ___ ☐ Fencing (Section 607)
  - ___ ☐ Temporary
  - ___ ☐ Permanent
  - ___ ☐ Sound Barrier
  - ___ ☐ Other: _____
- ___ ☐ Delineators (Section 612)
  - ___ ☐ Temporary
  - ___ ☐ Permanent
- ___ ■ Lighting (Section 613) and Traffic Control Devices (Permanent) (Section 614)
  - ___ ☐ Signal pole locations and elevations
  - ___ ■ Light pole locations and elevations
  - ___ ☐ Sign locations
  - ___ ☐ Field verify sign post locations, elevations, and lengths before fabrication.
  - ___ ☐ Other: _____
- ___ ☐ Pavement Marking (Section 627)
  - ___ ☐ Striping (Temp)
  - ___ ☐ Striping (Perm)
  - ___ ☐ Symbols
  - ___ ☐ Other: _____
- ___ ☐ Temporary Lighting and Construction Traffic Control Devices (Section 630)
  - ___ ☐ Signal pole locations and elevations (Temp)
  - ___ ☐ Light pole locations and elevations (Temp)
  - ___ ☐ Sign Locations (Temp)
  - ___ ☐ Other: _____
- ___ ■ Easements (Temp Staking by P.L.S. Only)
- ___ ■ Right of Way (Temp Staking by P.L.S. Only)

WORK PERFORMED BY THE CONTRACTOR'S SURVEYOR UNDER SECTION 629:

- ___ ☐ Monumentation (Section 629)
  - ___ ☐ Control
  - ___ ☐ Right of Way
  - ___ ☐ Land corners, Aliquot corners
  - ___ ☐ Easements
  - ___ ☐ Reference the specified existing monuments:** _____
  - ___ ☐ Replace the specified existing monuments: ** _____
  - ___ ☐ Locate monuments. It is estimated ___ hours are required.

NOTE: All 629 items shall include adequate research, calculations, and evaluations of evidence for monuments to be set.

** A Tabulation of Survey Monuments may be provided on the plans.

GENERAL NOTES:

1. Unless indicated otherwise on this Survey Tabulation Sheet, all survey work and staking intervals shall be done in accordance with the latest edition of the CDOT Survey Manual.
2. Adequate information for establishing lines, grades, and locations for all work items have been specified on the plans. Any additional information required to stake the item or element shall be generated by the Contractor's surveyor.
3. The Contractor's surveyor shall provide an estimate of the man-hours necessary to complete the work items indicated on this sheet. A copy of this sheet, with the estimated man-hours written on the blank line to the left of the specified items, shall be submitted with the Survey Schedule to the Engineer 2 days prior to the Presurvey Conference - Construction Survey.
4. Stakes and Monuments which are damaged or destroyed by the progress of construction shall be replaced by the Contractor at no additional cost to the Department.
5. The Contractor shall furnish an As Staked earthwork quantity to the Engineer prior to completion of twenty percent (20%) of the planned earthwork in any phase as per the CDOT Survey Manual. A printed copy of the As Staked earthwork data and a computer disk in the specified format shall be submitted to the Engineer. The Contractor shall field verify original ground cross sections at a maximum 500 feet intervals.
6. Prior to beginning work on any subsequent operation, such as placing base course or paving, the Contractor shall certify in writing to the Engineer that the final grade is within specified tolerance.
7. The Contractor's surveyor shall perform all field surveying and calculations necessary to tie plan grades into field grades.
8. The Contractor shall coordinate construction staking on the project with any utility work.
9. Fieldbooks shall contain daily records of points set and or measurements observed. The information recorded shall contain: date, crew members' names, point no., description, staking information, and sketches. If the survey information is collected electronically, information recorded shall be provided to the Project Engineer in a hard copy format that is intuitive, clear and related to the supplemental information recorded in the field books. All linear surveys, such as slope stakes and blue tops, shall have the station and offset information related to the measured information. Non-linear surveys such as structures staking shall have sketches relating electronic information, such as point numbers, to the sketch.
10. The Contractor's surveyor shall submit the following fieldbooks to the Engineer:
    - ■ Horizontal Control (Primary & Secondary)
    - ■ Vertical Control (i.e. Benchmarks)
    - ■ Property Pin Ties
    - ■ Horizontal Alignment
    - ■ Grading
    - ■ Slope Staking
    - ■ Minor Structures
    - ☐ Major Structures
    - ☐ One fieldbook for each work category shown on this sheet
    - ☐ Other Fieldbook(s): _____

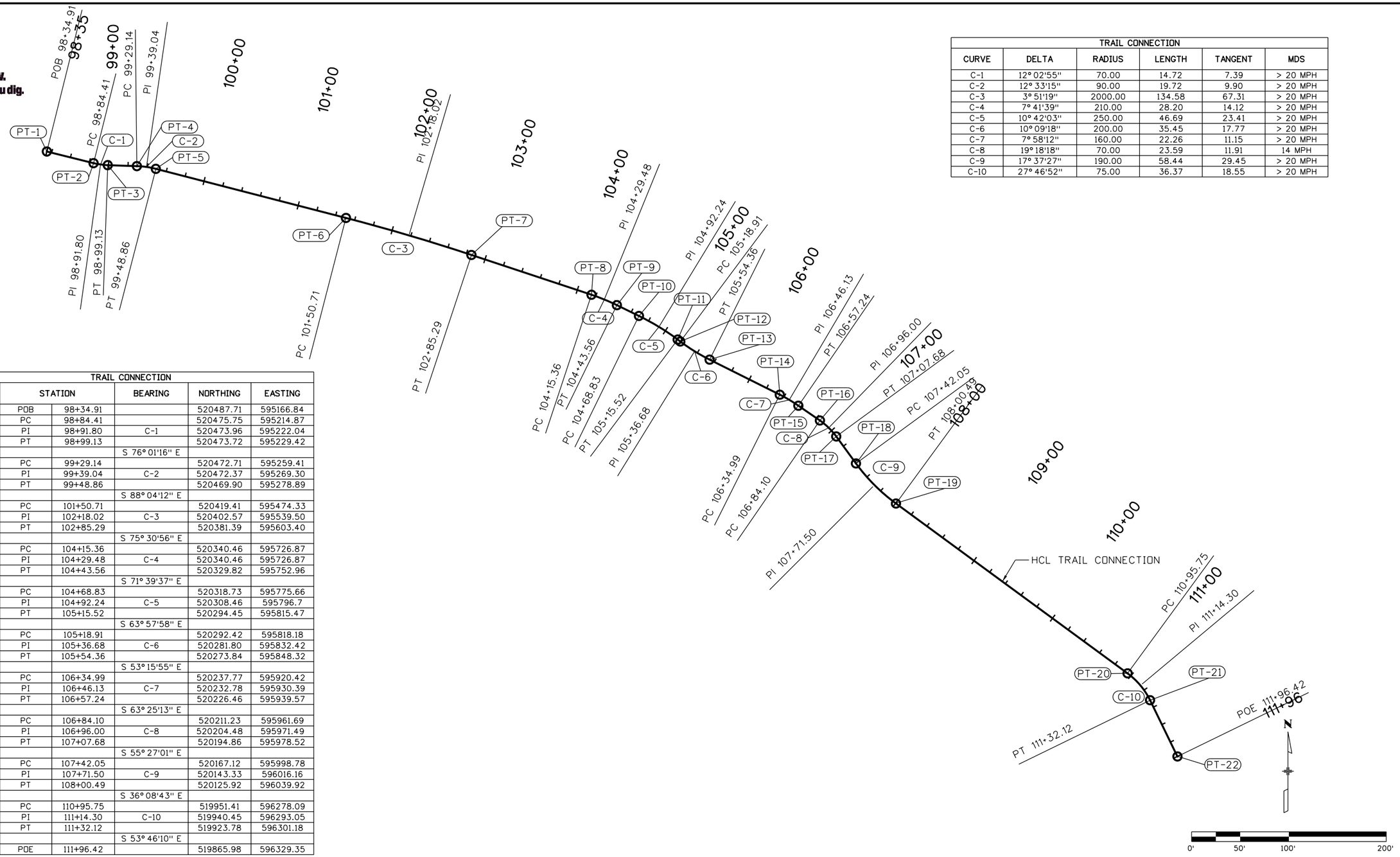

TRAIL CONNECTION					
CURVE	DELTA	RADIUS	LENGTH	TANGENT	MDS
C-1	12° 02'55"	70.00	14.72	7.39	> 20 MPH
C-2	12° 33'15"	90.00	19.72	9.90	> 20 MPH
C-3	3° 51'19"	2000.00	134.58	67.31	> 20 MPH
C-4	7° 41'39"	210.00	28.20	14.12	> 20 MPH
C-5	10° 42'03"	250.00	46.69	23.41	> 20 MPH
C-6	10° 09'18"	200.00	35.45	17.77	> 20 MPH
C-7	7° 58'12"	160.00	22.26	11.15	> 20 MPH
C-8	19° 18'18"	70.00	23.59	11.91	14 MPH
C-9	17° 37'27"	190.00	58.44	29.45	> 20 MPH
C-10	27° 46'52"	75.00	36.37	18.55	> 20 MPH

TRAIL CONNECTION					
POINT	STATION		BEARING	NORTHING	EASTING
PT-1	POB	98+34.91		520487.71	595166.84
PT-2	PC	98+84.41		520475.75	595214.87
	PI	98+91.80	C-1	520473.96	595222.04
PT-3	PT	98+99.13		520473.72	595229.42
			S 76° 01'16" E		
PT-4	PC	99+29.14		520472.71	595259.41
	PI	99+39.04	C-2	520472.37	595269.30
PT-5	PT	99+48.86		520469.90	595278.89
			S 88° 04'12" E		
PT-6	PC	101+50.71		520419.41	595474.33
	PI	102+18.02	C-3	520402.57	595539.50
PT-7	PT	102+85.29		520381.39	595603.40
			S 75° 30'56" E		
PT-8	PC	104+15.36		520340.46	595726.87
	PI	104+29.48	C-4	520340.46	595726.87
PT-9	PT	104+43.56		520329.82	595752.96
			S 71° 39'37" E		
PT-10	PC	104+68.83		520318.73	595775.66
	PI	104+92.24	C-5	520308.46	595796.7
PT-11	PT	105+15.52		520294.45	595815.47
			S 63° 57'58" E		
PT-12	PC	105+18.91		520292.42	595818.18
	PI	105+36.68	C-6	520281.80	595832.42
PT-13	PT	105+54.36		520273.84	595848.32
			S 53° 15'55" E		
PT-14	PC	106+34.99		520237.77	595920.42
	PI	106+46.13	C-7	520232.78	595930.39
PT-15	PT	106+57.24		520226.46	595939.57
			S 63° 25'13" E		
PT-16	PC	106+84.10		520211.23	595961.69
	PI	106+96.00	C-8	520204.48	595971.49
PT-17	PT	107+07.68		520194.86	595978.52
			S 55° 27'01" E		
PT-18	PC	107+42.05		520167.12	595998.78
	PI	107+71.50	C-9	520143.33	596016.16
PT-19	PT	108+00.49		520125.92	596039.92
			S 36° 08'43" E		
PT-20	PC	110+95.75		519951.41	596278.09
	PI	111+14.30	C-10	519940.45	596293.05
PT-21	PT	111+32.12		519923.78	596301.18
			S 53° 46'10" E		
PT-22	POE	111+96.42		519865.98	596329.35

Print Date: 5/25/2016
File Name: 15D002DES_Geo01.dgn
Horiz. Scale: 1:100 Vert. Scale: As Noted

FELSBURG HOLT & ULLEVIG
6300 South Syracuse Way
Suite 600
Centennial, CO 80111
(303) 721-1440

R-X

Sheet Revisions		
Date:	Comments	Init.

Town of Superior

CDOT Region 4
10601 W. 10th Street
Greeley, CO 80634

LHN

As Constructed
No Revisions:
Revised:
Void:

SUPERIOR TRAIL CONNECTION
GEOMETRIC LAYOUT

Designer: AMO
Detailer: AMO
Structure Numbers
Sheet Subset: ROADWAY
Subset Sheets: GEO-1 of 1

Project No./Code
TAP M258-003
20671
Sheet Number

Ashley 8:53:50 AM I:\113166-02 - Superior Trail-BRT\15D002\Design\Drawings\15D002DES_Geo01.dgn

Know what's below. Call before you dig.

US 36

US 36 DESIGN BUILD PROJECT

EB ON RAMP AT MCCASLIN

00+00

98+35

BEGIN PROJECT
STA 98+34.91

10' TRAIL

HCL TRAIL CONNECTION

EX. CDOT ROW

TOE OF FILL (TYP.)

TOP OF CUT (TYP.)

MATCHLINE HCL TRAIL
STA. 105+00.00

PARCEL II

SUPERIOR PLAZA SUBDIVISION
P-38 F-3 #26

0' 25' 50' 100'

Print Date: 5/25/2016
File Name: 15D002DES_Plan01.dgn
Horiz. Scale: 1:50 Vert. Scale: As Noted

FELSBURG HOLT & ULLEVIG
6300 South Syracuse Way
Suite 600
Centennial, CO 80111
(303) 721-1440

R-X

Sheet Revisions		
Date:	Comments	Init.

Town of Superior

CDOT Region 4
10601 W. 10th Street
Greeley, CO 80634

LHN

As Constructed
No Revisions:
Revised:
Void:

SUPERIOR TRAIL CONNECTION
PLAN SHEET
STA. 98+34.91 TO 105+00.00

Designer: AMO
Detailer: AMO
Sheet Subset: ROADWAY
Structure Numbers
Subset Sheets: PLN-1 of 2

Project No./Code
TAP M258-003
20671
Sheet Number 12

Ashley 8:53:58 AM 1:\113166-02 - Superior Trail-BRT\15D002\Design\Drawings\15D002DES_Plan01.dgn

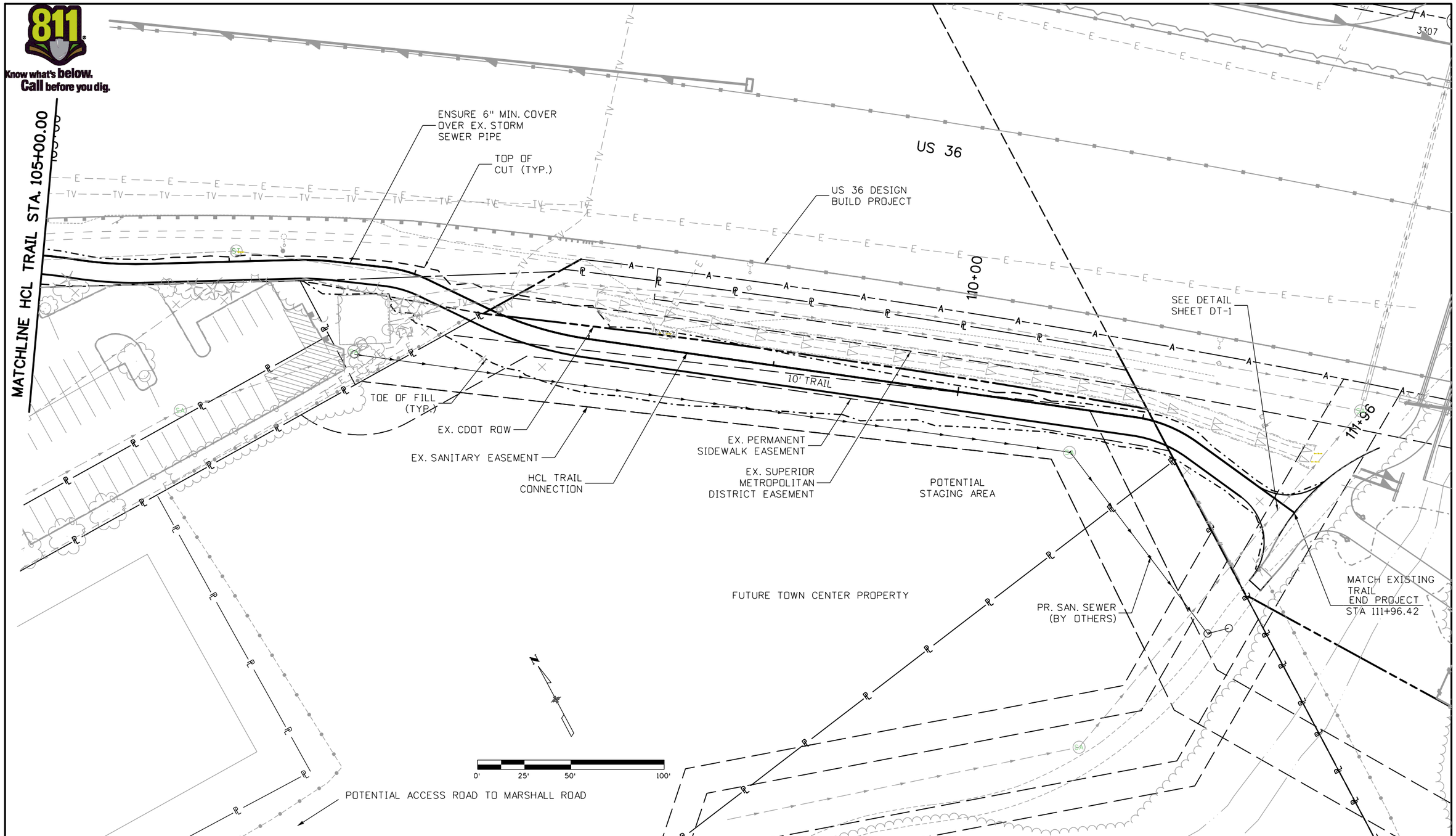

Ashley 8:53:59 AM I:\1J3166-02 - Superior Trail-BRT\150002\Design\Drawings\15D002DES_Plan02.dgn

Print Date: 5/25/2016
File Name: 15D002DES_Plan02.dgn
Horiz. Scale: 1:50 Vert. Scale: As Noted

FELSBURG HOLT & ULLEVIG
6300 South Syracuse Way
Suite 600
Centennial, CO 80111
(303) 721-1440

R-X

Sheet Revisions		
Date:	Comments	Init.

Town of Superior

CDOT Region 4
10601 W. 10th Street
Greeley, CO 80634

LHN

As Constructed
No Revisions:
Revised:
Void:

SUPERIOR TRAIL CONNECTION
PLAN SHEET
STA. 105+00.00 TO 111+96.42

Designer: AMO
Detailer: AMO
Sheet Subset: ROADWAY
Structure Numbers
Subset Sheets: PLN-2 of 2

Project No./Code
TAP M258-003
20671
Sheet Number 13

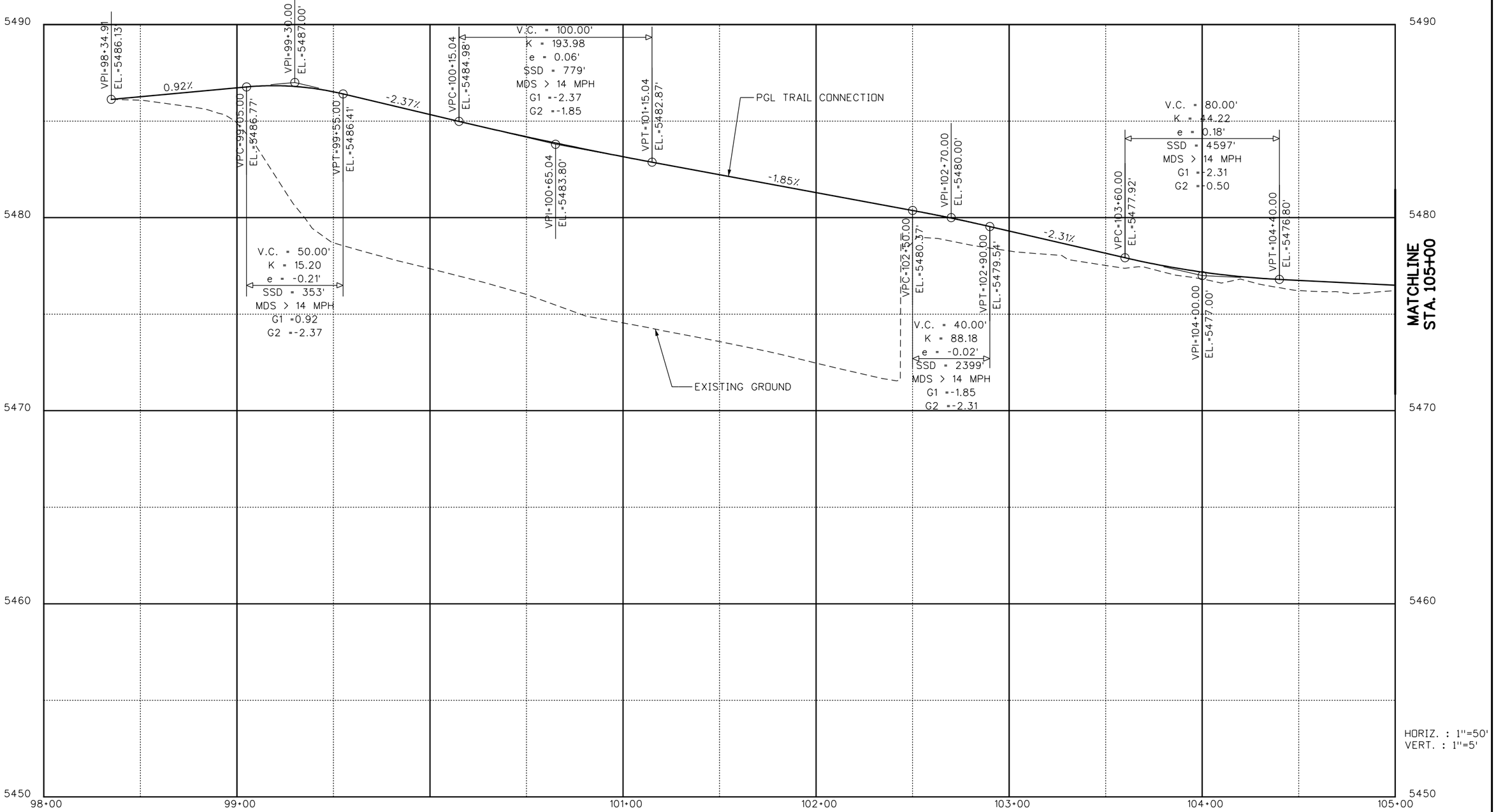

Ashley 8:54:02 AM I:\113166-02 - Superior Trail-BRT\150002\Design\Drawings\150002DES_Prof01.dgn

Print Date: 5/25/2016
File Name: 150002DES_Prof01.dgn
Horiz. Scale: 1:50 Vert. Scale: As Noted

FELSBURG HOLT & ULLEVIG
6300 South Syracuse Way
Suite 600
Centennial, CO 80111
(303) 721-1440

R-X

Sheet Revisions		
Date:	Comments	Init.

Town of Superior

CDOT
Region 4
10601 W. 10th Street
Greeley, CO 80634

LHN

As Constructed
No Revisions:
Revised:
Void:

SUPERIOR TRAIL CONNECTION
PROFILE SHEET
STA. 98+34.91 TO STA. 105+00.00

Designer: AMO
Detailer: AMO
Sheet Subset: ROADWAY
Structure Numbers
Subset Sheets: PR-1 of 2

Project No./Code
TAP M258-003
20671
Sheet Number 14

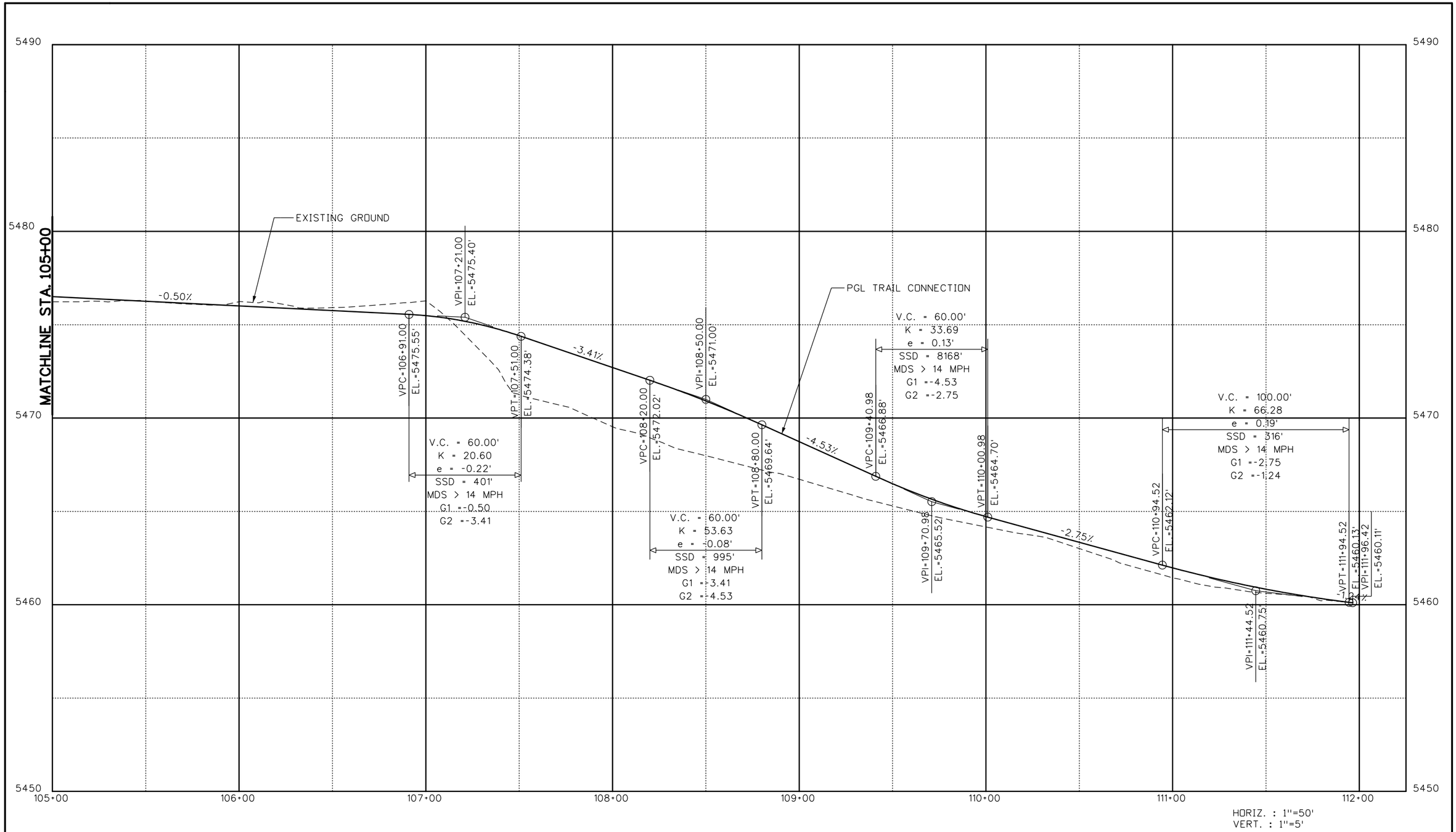

Ashley 8:54:02 AM I:\113166-02 - Superior Trail-BRT\15D002\Design\Drawings\15D002DES_Prof02.dgn

Print Date: 5/25/2016	Sheet Revisions		
File Name: 15D002DES_Prof02.dgn	Date:	Comments	Init.
Horiz. Scale: 1:50 Vert. Scale: As Noted			
FELSBURG HOLT & ULLEVIG 6300 South Syracuse Way Suite 600 Centennial, CO 80111 (303) 721-1440			

R-X

Town of Superior

CDOT CO Region 4
10601 W. 10th Street
Greeley, CO 80634

LHN

As Constructed	SUPERIOR TRAIL CONNECTION PROFILE SHEET STA. 105+00.00 TO STA. 111+96.42		Project No./Code
No Revisions:			TAP M258-003
Revised:	Designer: AMO	Structure Numbers	20671
Void:	Detailer: AMO		
	Sheet Subset: ROADWAY	Subset Sheets: PR-2 of 2	Sheet Number 15

Know what's below.
Call before you dig.

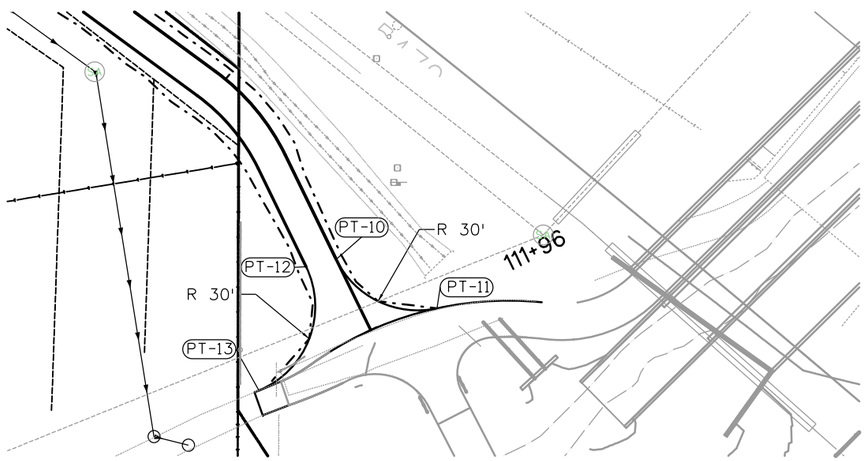

TRAIL CONNECTION				
POINT ID	NORTHING	EASTING	ELEVATION	DESCRIPTION
PT-1-9	Intentionally Omitted			
PT-10	519889.34	596317.96	5460.47	Start of Curb Return
PT-11	519873.16	596351.29	5459.44	Match Existing
PT-12	519886.92	596308.02	5460.71	Start of Curb Return
PT-13	519846.05	596292.49	5460.64	Match Existing

Ashley 8:54:04 AM 1:\113166-02 - Superior Trail-BRT\150002\Design\Drawings\150002DES_Detail01.dgn

Print Date: 5/25/2016
File Name: 15D002DES_Detail01.dgn
Horiz. Scale: 1:50 Vert. Scale: As Noted

FELSBURG HOLT & ULLEVIG
6300 South Syracuse Way
Suite 600
Centennial, CO 80111
(303) 721-1440

R-X

Sheet Revisions

Date:	Comments	Init.

Town of Superior

CDOT
Region 4
10601 W. 10th Street
Greeley, CO 80634

LHN

As Constructed
No Revisions:
Revised:
Void:

SUPERIOR TRAIL CONNECTION
ROADWAY DETAILS

Designer: AMO
Detailer: AMO
Sheet Subset: DETAILS
Structure Numbers
Subset Sheets: DT-1 of 1

Project No./Code
TAP M258-003
20671
Sheet Number 16

Know what's below. Call before you dig.

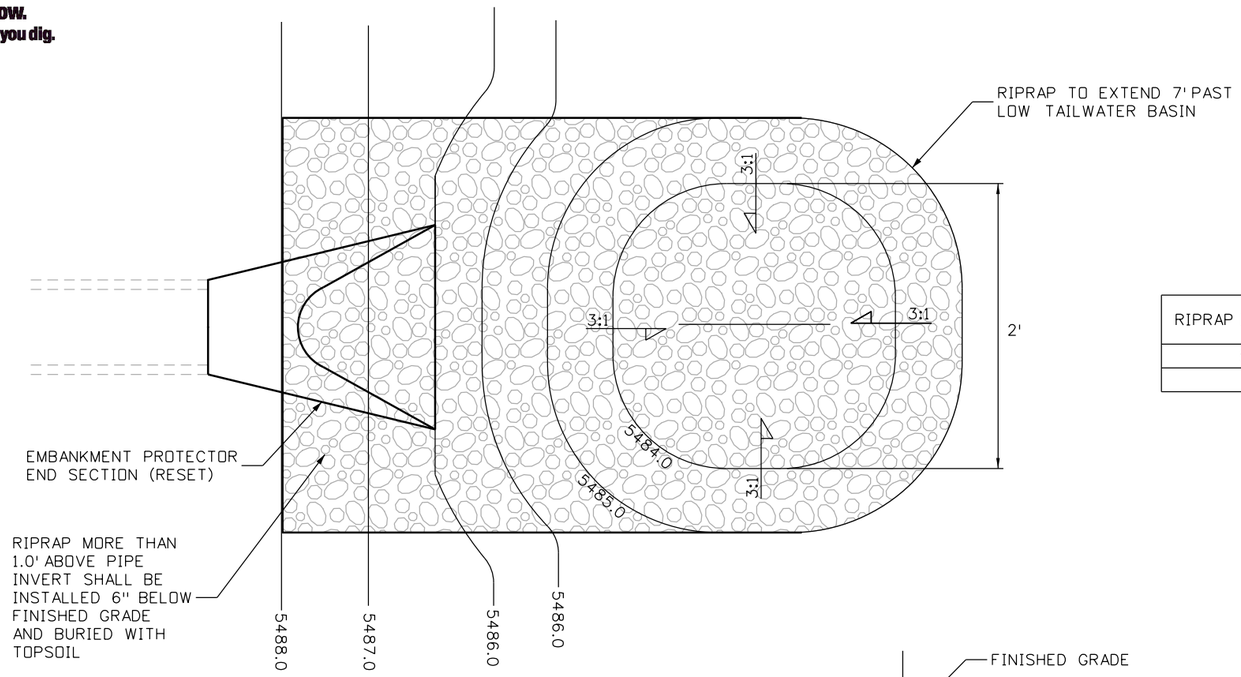

LOW TAILWATER RIPRAP BASIN PLAN

N.T.S.

RIPRAP D50 (IN.)	THICKNESS (FT.)	LENGTH (FT.)	WIDTH (FT.)	SOIL RIPRAP QUANTITY (C.Y.)
9	1.5	20	8	9

LOW TAILWATER RIPRAP BASIN SUMMARY

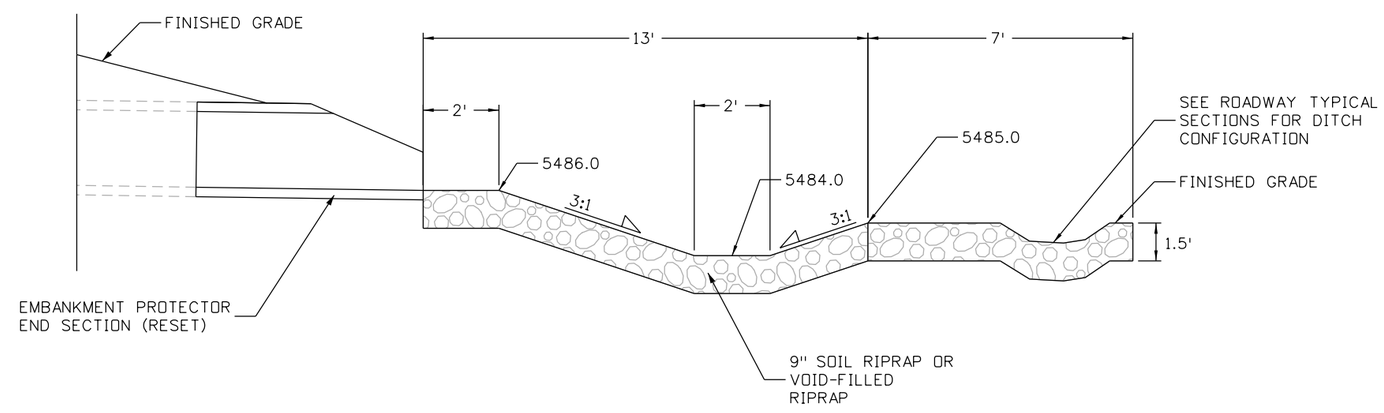

LOW TAILWATER RIPRAP BASIN PROFILE

N.T.S.

Ashley 8:54:05 AM I:\11316-02 - Superior Trail-BRT\15D002\Hydraulics\Drawings\15D002HYDR_Det01.dgn

Print Date: 5/25/2016	R-X 0000	Sheet Revisions	
File Name: 15D002HYDR_Det01.dgn		Date:	Comments	Init.
Horiz. Scale: 1:4 Vert. Scale: As Noted				

FELSBURG HOLT & ULLEVIG
6300 South Syracuse Way
Suite 600
Centennial, CO 80111
(303) 721-1440

Town of Superior

CDOT Region 4
10601 W. 10th Street
Greeley, CO 80634

LHN

As Constructed
No Revisions:
Revised:
Void:

SUPERIOR TRAIL CONNECTION
LOW TAILWATER RIPRAP BASIN

Designer: MPA
Detailer: MPA
Sheet Subset: DRAINAGE
Structure Numbers
Subset Sheets: DD-01 of 1

Project No./Code
TAP M258-003
20671
Sheet Number 17

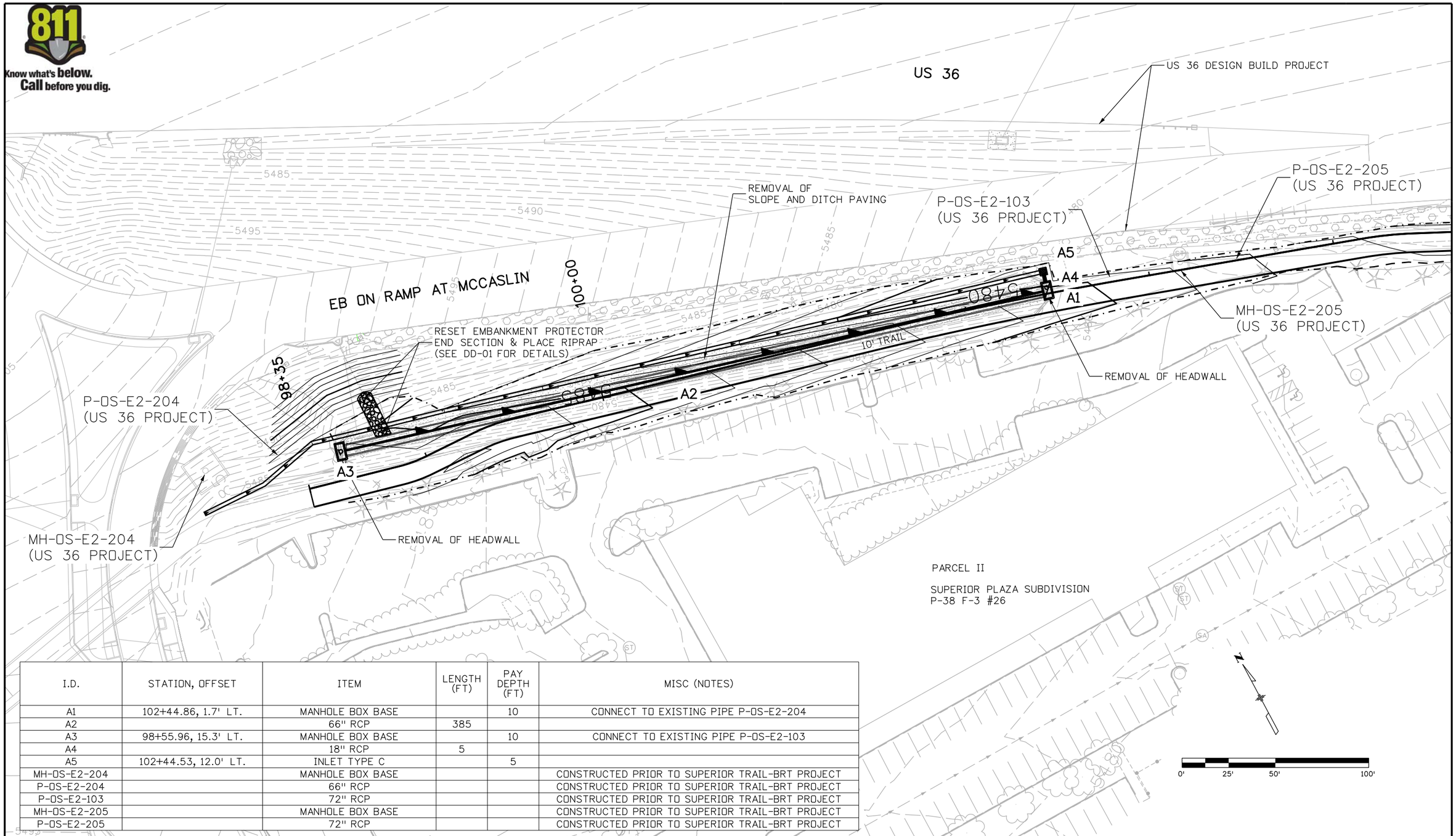

I.D.	STATION, OFFSET	ITEM	LENGTH (FT)	PAY DEPTH (FT)	MISC (NOTES)
A1	102+44.86, 1.7' LT.	MANHOLE BOX BASE		10	CONNECT TO EXISTING PIPE P-OS-E2-204
A2		66" RCP	385		
A3	98+55.96, 15.3' LT.	MANHOLE BOX BASE		10	CONNECT TO EXISTING PIPE P-OS-E2-103
A4		18" RCP	5		
A5	102+44.53, 12.0' LT.	INLET TYPE C		5	
MH-OS-E2-204		MANHOLE BOX BASE			CONSTRUCTED PRIOR TO SUPERIOR TRAIL-BRT PROJECT
P-OS-E2-204		66" RCP			CONSTRUCTED PRIOR TO SUPERIOR TRAIL-BRT PROJECT
P-OS-E2-103		72" RCP			CONSTRUCTED PRIOR TO SUPERIOR TRAIL-BRT PROJECT
MH-OS-E2-205		MANHOLE BOX BASE			CONSTRUCTED PRIOR TO SUPERIOR TRAIL-BRT PROJECT
P-OS-E2-205		72" RCP			CONSTRUCTED PRIOR TO SUPERIOR TRAIL-BRT PROJECT

Print Date: 5/25/2016
File Name: 15D002HYDR_Plan01.dgn
Horiz. Scale: 1:50 Vert. Scale: As Noted

FELSBURG HOLT & ULLEVIG
6300 South Syracuse Way
Suite 600
Centennial, CO 80111
(303) 721-1440

R-X

Sheet Revisions

Date:	Comments	Init.

Town of Superior

CDOT
Region 4
10601 W. 10th Street
Greeley, CO 80634

LHN

As Constructed
No Revisions:
Revised:
Void:

SUPERIOR TRAIL CONNECTION
PLAN SHEET
STA. 98+94.00 to 105+02.61

Designer: MPA
Detailer: MPA
Structure Numbers
Sheet Subset: DRAINAGE
Subset Sheets: DR-01 of 1

Project No./Code
TAP M258-003
20671
Sheet Number 18

adams 9:03:51 AM I:\13166-02 - Superior Trail-BRT\15D002\Hydraulics\Drawings\15D002HYDR_Plan01.dgn

Know what's below. Call before you dig.

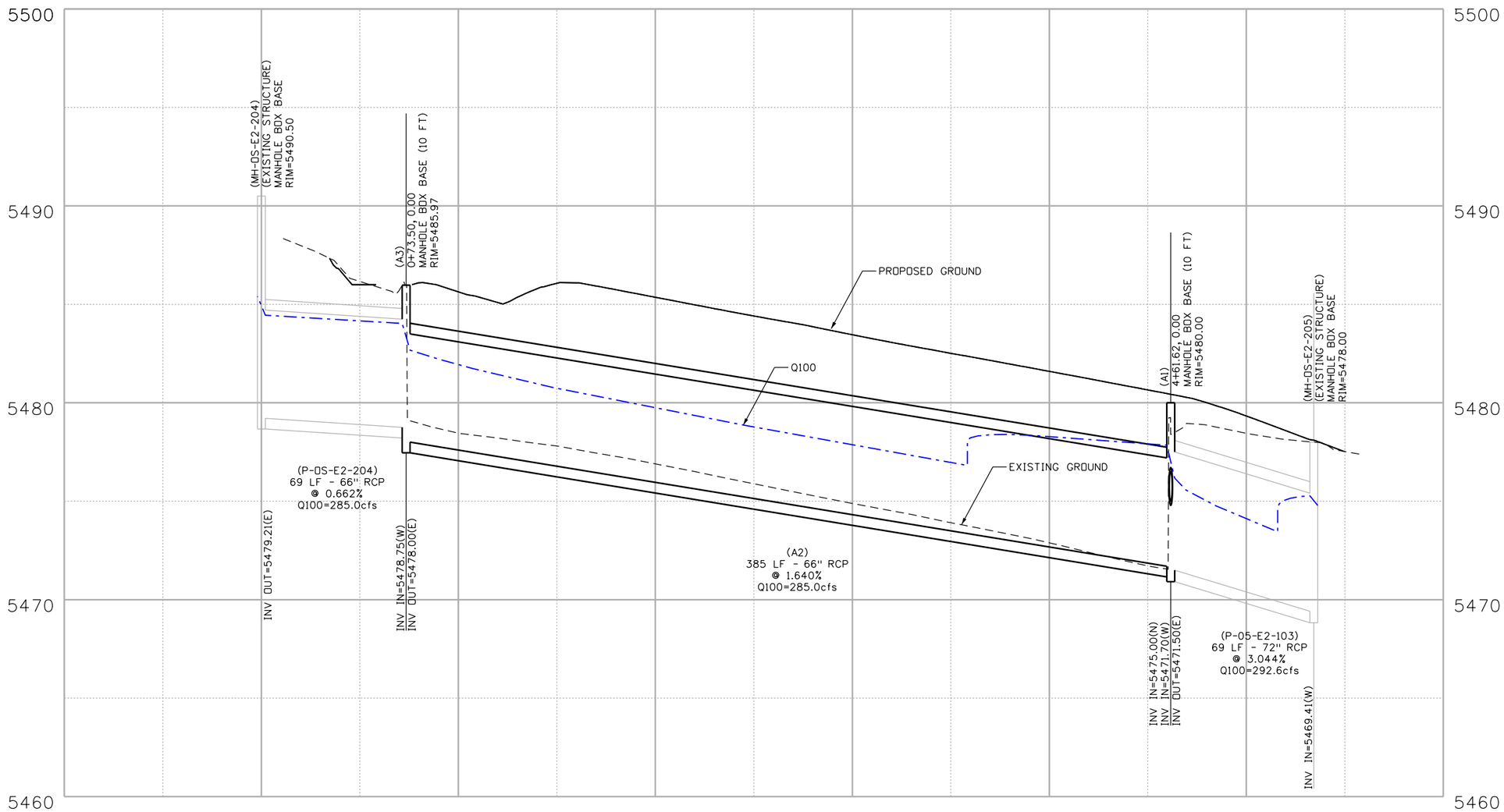

LINE "A"

Ashley 8:54:13 AM I:\113166-02 - Superior Trail-BRT\150002\Hydraulics\Drawings\150002HYDR_Pof01.dgn

Print Date: 5/25/2016	Sheet Revisions		
File Name: 150002HYDR_Pof01.dgn	Date:	Comments	Init.
Horiz. Scale: 1:60 Vert. Scale: As Noted			

R-X

FELSBURG HOLT & ULLEVIG
6300 South Syracuse Way
Suite 600
Centennial, CO 80111
(303) 721-1440

Town of Superior

CDOT CO Region 4
10601 W. 10th Street
Greeley, CO 80634

LHN

As Constructed
No Revisions:
Revised:
Void:

SUPERIOR TRAIL CONNECTION
PROFILE SHEET
LINE "A"

Designer: MPA
Detailer: MPA
Structure Numbers
Sheet Subset: DRAINAGE
Subset Sheets: DP-01 of 2

Project No./Code
TAP M258-003
20671
Sheet Number 19

Know what's below. Call before you dig.

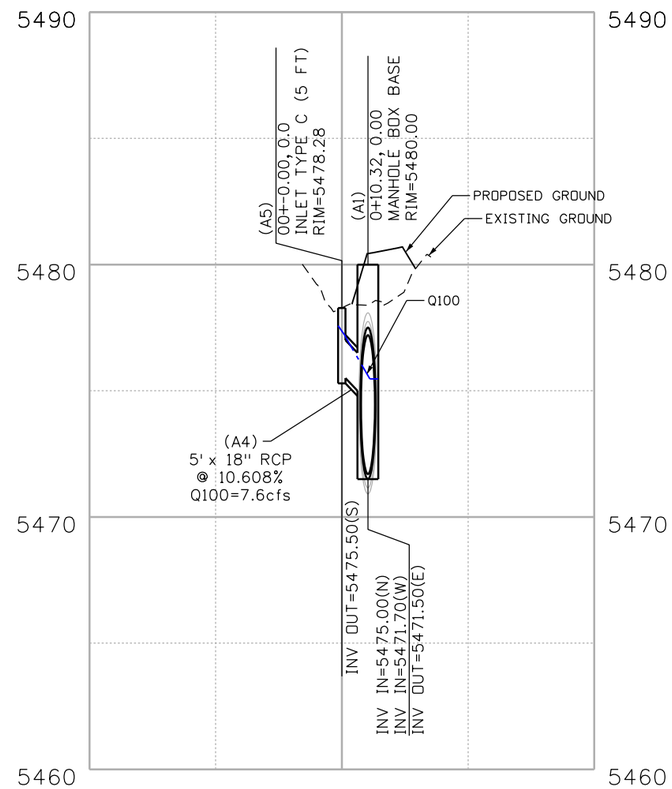

LINE "A"

Ashley 8:54:14 AM I:\13166-02 - Superior Trail-BRT\15D002\Hydraulics\Drawings\15D002HYDR_Pof02.dgn

Print Date: 5/25/2016			
File Name: 15D002HYDR_Pof02.dgn			
Horiz. Scale: 1:60	Vert. Scale: As Noted		

FELSBURG HOLT & ULLEVIG
6300 South Syracuse Way
Suite 600
Centennial, CO 80111
(303) 721-1440

R-X

Sheet Revisions		
Date:	Comments	Init.

Town of Superior

CDOT
Region 4
10601 W. 10th Street
Greeley, CO 80634

LHN

As Constructed			
No Revisions:			
Revised:			
Void:			

SUPERIOR TRAIL CONNECTION
PROFILE SHEET
LINE "A"

Designer:	MPA	Structure Numbers	
Detailer:	MPA		
Sheet Subset:	DRAINAGE	Subset Sheets:	DP-02 of 2

Project No./Code
TAP M258-003
20671
Sheet Number 20

Know what's below. Call before you dig.

AGGREGATE BAG (20 LF)

EX. PERMANENT EASEMENT

MCCASLIN BLVD

AGGREGATE BAG (20 LF)

STORM DRAIN INLET PROTECTION (TYPE 1) (14 LF)

AGGREGATE BAG (6 LF)

VEHICLE TRACKING PAD (1 EA)

EX. ROW

TERRAIN IS PERIMETER CONTROL

EX. PERMANENT EASEMENT

KEY MAP

LEGEND

EROSION LOG

TOE OF FILL

TOP OF CUT

LIMITS OF DISTURBANCE —LDA—

FLOW DIRECTION

AGGREGATE (GRAVEL) BAG

0' 25' 50' 100'

Print Date: 6/6/2016

File Name: 15D002LAND_ENVI_INI_Plan01.dgn

Horiz. Scale: 1:50 Vert. Scale: As Noted

FELSBURG HOLT & ULLEVIG
6300 South Syracuse Way
Suite 600
Centennial, CO 80111
(303) 721-1440

R-X

Sheet Revisions		
Date:	Comments	Init.

Town of Superior

CDOT

Region 4
10601 W. 10th Street
Greeley, CO 80634

LHN

As Constructed

No Revisions:

Revised:

Void:

SUPERIOR TRAIL CONNECTION
INITIAL GRADING/EROSION CONTROL PLAN
SOUTHWEST QUADRANT LANDSCAPING

Designer: KMD
Detailer: KLT
Sheet Subset: EROSION
Structure Numbers
Subset Sheets: EI-1 of 4

Project No./Code

TAP M258-003

20671

Sheet Number 21

kat 1:16:37 PM I:\113166-02 - Superior Trail-BRT\15D002\Landscape_Environmental\Drawings\15D002LAND_ENVI_INI_Plan01.dgn

Know what's below.
Call before you dig.

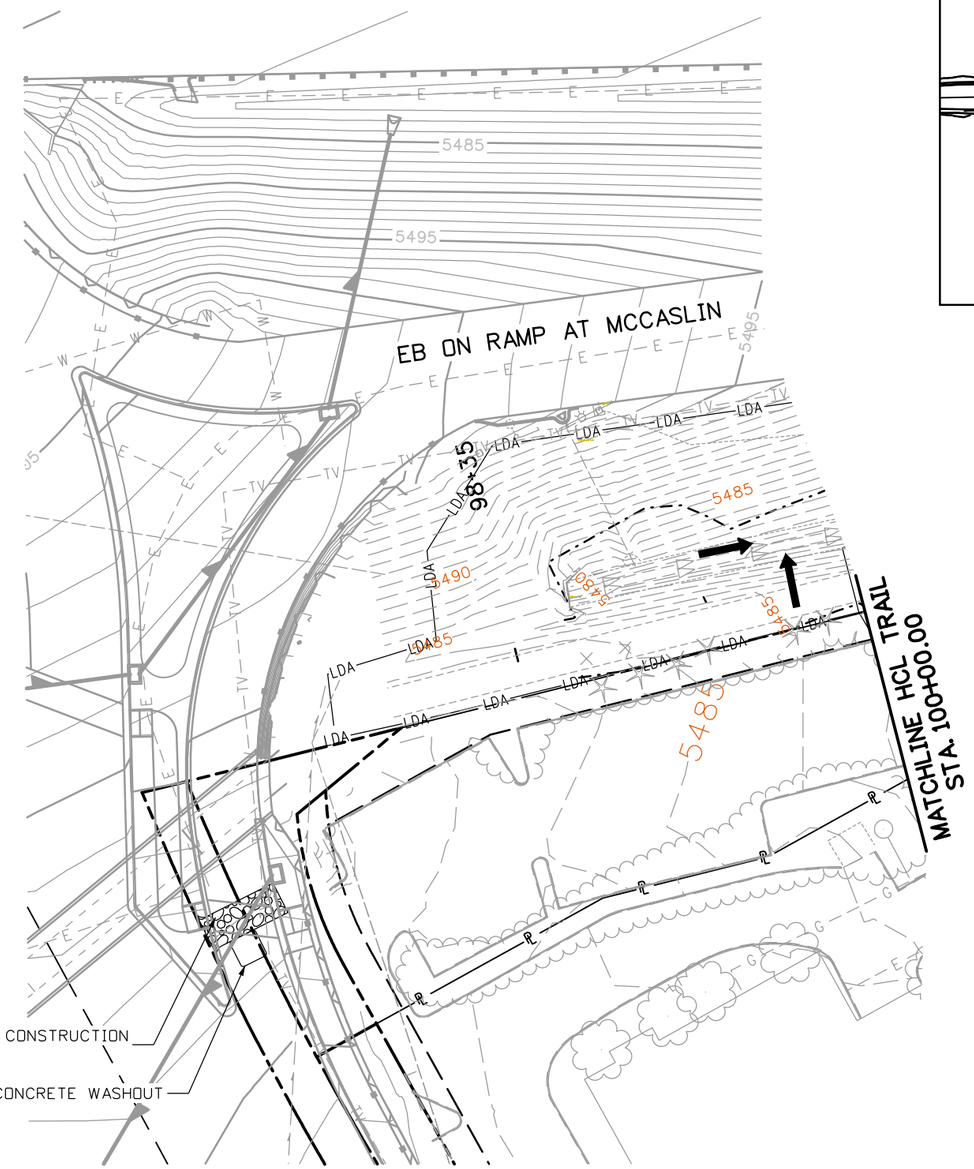

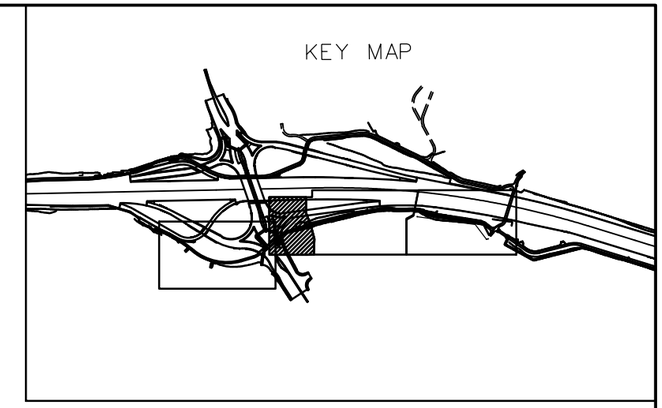

LEGEND

- EROSION LOG
- TOE OF FILL
- TOP OF CUT
- LIMITS OF DISTURBANCE — LDA —
- FLOW DIRECTION
- AGGREGATE (GRAVEL) BAG

N

0' 25' 50' 100'

Print Date: 5/25/2016	Sheet Revisions		
File Name: 15D002LAND_ENVI_INI_Plan02.dgn	Date:	Comments	Init.
Horiz. Scale: 1:50 Vert. Scale: As Noted			

R-X

FELSBURG HOLT & ULLEVIG
6300 South Syracuse Way
Suite 600
Centennial, CO 80111
(303) 721-1440

Town of Superior

CDOT Region 4
10601 W. 10th Street
Greeley, CO 80634

LHN

As Constructed
No Revisions:
Revised:
Void:

SUPERIOR TRAIL CONNECTION
INITIAL GRADING/EROSION CONTROL PLAN
STA. 100+00.00 TO 107+00.00

Designer: KMD
Detailer: LMG
Structure Numbers
Sheet Subset: EROSION
Subset Sheets: EI-2 of 4

Project No./Code
TAP M258-003
20671
Sheet Number 22

Ashley 8:54:24 AM I:\113166-02 - Superior Trail-BRT\15D002\Landscape_Environmental\Drawings\15D002LAND_ENVI_INI_Plan02.dgn

Know what's below. Call before you dig.

EB ON RAMP AT MCCASLIN

US 36

105+00

00+00

EROSION LOG (12 INCH)
(40 LF)

MATCHLINE HCL TRAIL
STA. 107+00.00

MATCHLINE HCL TRAIL
STA. 100+00.00

EX. ROW

PARCEL II

SUPERIOR PLAZA SUBDIVISION
P-38 F-3 #26

KEY MAP

0' 25' 50' 100'

LEGEND

EROSION LOG
TOE OF FILL
TOP OF CUT
LIMITS OF DISTURBANCE — LDA —
FLOW DIRECTION
AGGREGATE (GRAVEL) BAG

Print Date: 5/25/2016
File Name: 15D002LAND_ENVI_INI_Plan03.dgn
Horiz. Scale: 1:50 Vert. Scale: As Noted

FELSBURG HOLT & ULLEVIG
6300 South Syracuse Way
Suite 600
Centennial, CO 80111
(303) 721-1440

R-X

Sheet Revisions		
Date:	Comments	Init.

Town of Superior

CDOT

Region 4
10601 W. 10th Street
Greeley, CO 80634

LHN

As Constructed
No Revisions:
Revised:
Void:

SUPERIOR TRAIL CONNECTION
INITIAL GRADING/EROSION CONTROL PLAN
STA. 100+00.00 TO 107+00.00

Designer: KMD
Detailer: KLT
Structure Numbers
Sheet Subset: EROSION
Subset Sheets: EI-3 of 4

Project No./Code
TAP M258-003
20671
Sheet Number 23

Ashley 8:54:25 AM I:\13166-02 - Superior Trail-BRT\15D002\Landscape_Environmental\Drawings\15D002LAND_ENVI_INI_Plan03.dgn

Know what's below. Call before you dig.

MATCHLINE HCL TRAIL STA. 107+00.00

US 36

EROSION LOG (12 INCH) (30 LF)

110+00

111+96

EX. CDOT ROW

EX. SANITARY EASEMENT

EX. PERMANENT SIDEWALK EASEMENT

EX. SUPERIOR METROPOLITAN DISTRICT EASEMENT

FUTURE TOWN CENTER PROPERTY

END PROJECT STA 112+44.54

KEY MAP

LEGEND

EROSION LOG

TOE OF FILL

TOP OF CUT

LIMITS OF DISTURBANCE — LDA —

FLOW DIRECTION

AGGREGATE (GRAVEL) BAG

0' 25' 50' 100'

Print Date: 5/25/2016	Sheet Revisions		
File Name: 15D002LAND_ENVI_INI_Plan04.dgn	Date:	Comments	Init.
Horiz. Scale: 1:50 Vert. Scale: As Noted			
FELSBURG HOLT & ULLEVIG, 6300 South Syracuse Way, Suite 600, Centennial, CO 80111, (303) 721-1440			

R-X

Town of Superior

CO CDOT Region 4, 10601 W. 10th Street, Greeley, CO 80634

LHN

As Constructed

No Revisions:

Revised:

Void:

SUPERIOR TRAIL CONNECTION
INITIAL GRADING/EROSION CONTROL PLAN
STA. 107+00.00 TO 112+44.54

Designer:	KMD	Structure Numbers	
Detailer:	KLT		
Sheet Subset:	EROSION	Subset Sheets:	EI-4 of 4

Project No./Code

TAP M258-003

20671

Sheet Number 24

Ashley 8:54:27 AM I:\13166-02 - Superior Trail-BRT\15D002\Landscape_Environmental\Drawings\15D002LAND_ENVI_INI_Plan04.dgn

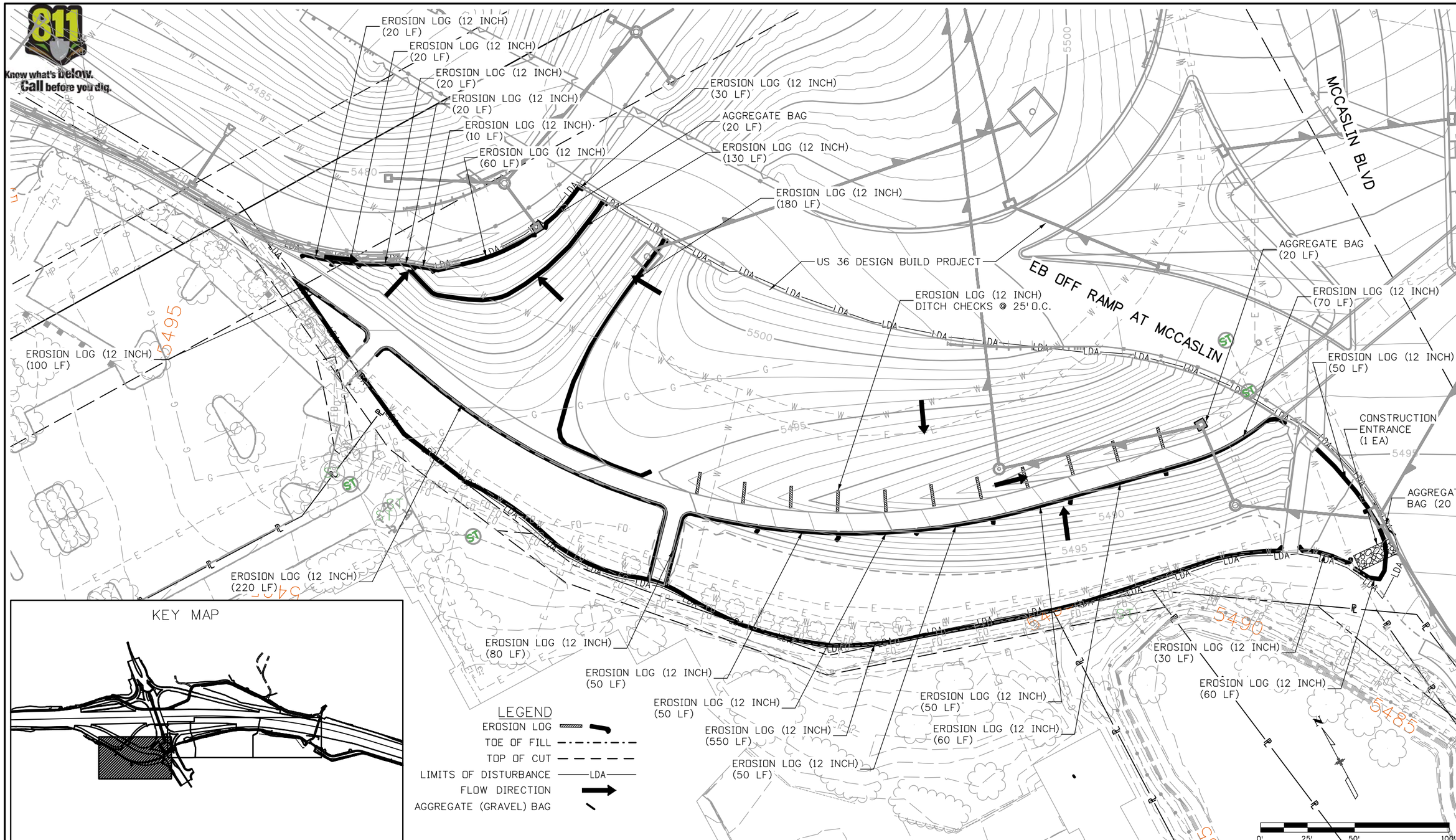

Print Date: 6/6/2016
File Name: 15D002LAND_ENVI_INT_Plan01.dgn
Horiz. Scale: 1:50 Vert. Scale: As Noted

FELSBURG HOLT & ULLEVIG
6300 South Syracuse Way
Suite 600
Centennial, CO 80111
(303) 721-1440

R-X

Sheet Revisions		
Date:	Comments	Init.

Town of Superior

CDOT
Region 4
10601 W. 10th Street
Greeley, CO 80634

LHN

As Constructed
No Revisions:
Revised:
Void:

SUPERIOR TRAIL CONNECTION
INTERIM GRADING/EROSION CONTROL PLAN
SOUTHWEST QUADRANT LANDSCAPING

Designer: KMD
Detailer: KLT
Sheet Subset: EROSION
Structure Numbers
Subset Sheets: EN-1 of 4

Project No./Code
TAP M258-003
20671
Sheet Number 25

kat 1:17:07 PM I:\113166-02 - Superior Trail-BRT\15D002\Landscape_Environmental\Drawings\15D002LAND_ENVI_INT_Plan01.dgn

Know what's below. Call before you dig.

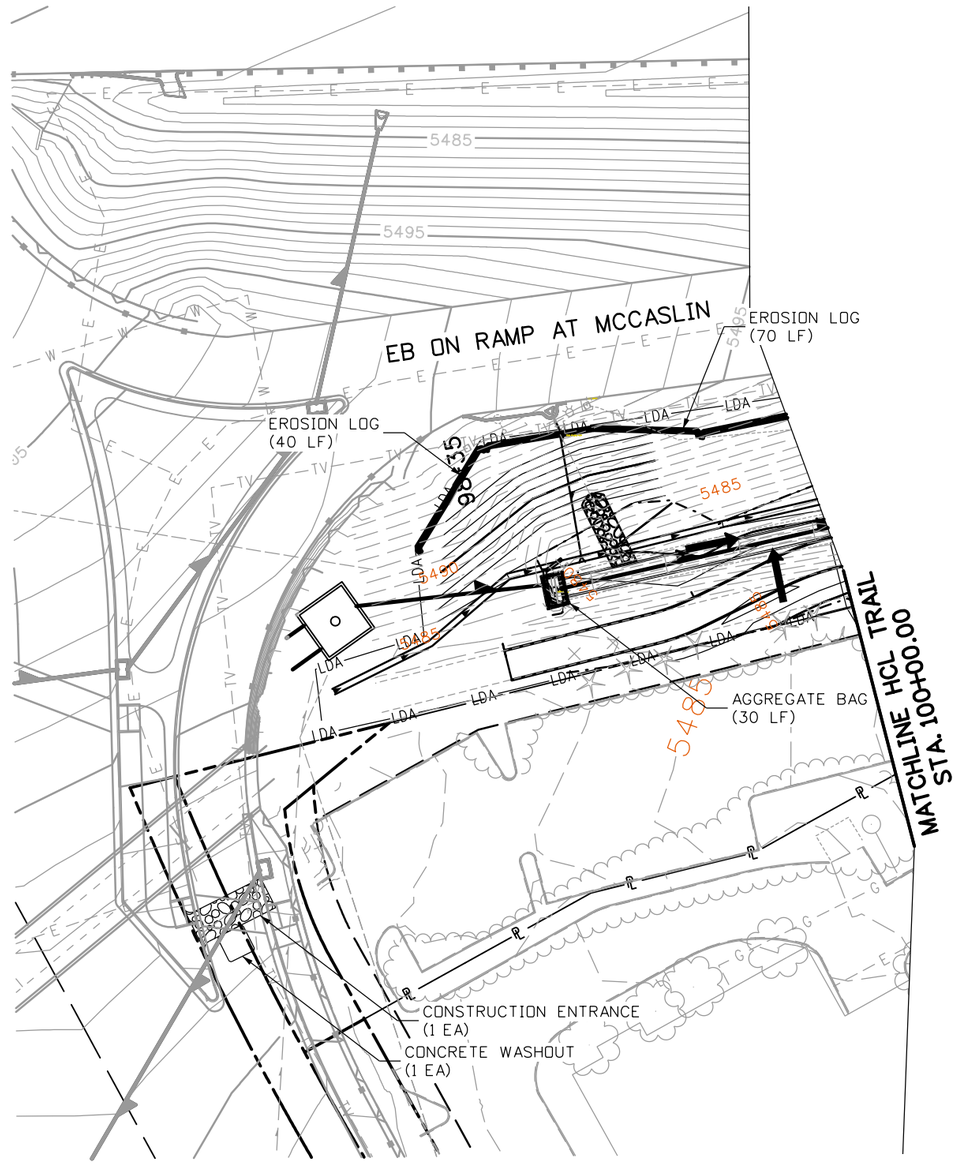

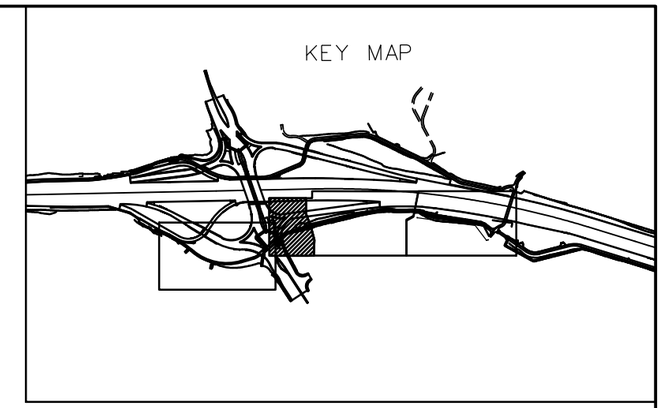

LEGEND

- EROSION LOG
- TOE OF FILL
- TOP OF CUT
- LIMITS OF DISTURBANCE — LDA
- FLOW DIRECTION
- AGGREGATE (GRAVEL) BAG

N

0' 25' 50' 100'

Print Date: 5/25/2016	R-X	Sheet Revisions			As Constructed
File Name: 15D002LAND_ENVI_INT_Plan02.dgn		Date:	Comments	Init.	No Revisions:
Horiz. Scale: 1:50 Vert. Scale: As Noted					Revised:
FELSBURG HOLT & ULLEVIG 6300 South Syracuse Way Suite 600 Centennial, CO 80111 (303) 721-1440					Void:

Town of Superior

CDOT Region 4
10601 W. 10th Street
Greeley, CO 80634

LHN

SUPERIOR TRAIL CONNECTION
INTERIM GRADING/EROSION CONTROL PLAN
STA. 100+00.00 TO 107+00.00

Designer:	KMD	Structure Numbers	
Detailer:	LMG		
Sheet Subset:	EROSION	Subset Sheets:	EN-2 of 4

Project No./Code
TAP M258-003
20671
Sheet Number 26

Ashley 8:54:31 AM I:\13166-02 - Superior Trail-BRT\15D002\Landscape_Environmental\Drawings\15D002LAND_ENVI_INT_Plan02.dgn

Know what's below. Call before you dig.

EROSION LOG (12 INCH) (350 LF)

EROSION LOG (12 INCH) (80 LF)

EROSION LOG (12 INCH) (120 LF)

EROSION LOG (12 INCH) (60 LF)

EROSION LOG (12 INCH) (120 LF)

EROSION LOG (12 INCH) (20 LF)

US 36

EB ON RAMP AT MCCASLIN

00+00

105+00

MATCHLINE HCL TRAIL STA. 107+00.00

MATCHLINE HCL TRAIL STA. 100+00.00

GRAVEL BAG (20 LF)

GRAVEL BAG (30 LF)

EX. CDOT ROW

EX. ROW

PARCEL II

SUPERIOR PLAZA SUBDIVISION
P-38 F-3 #26

KEY MAP

0' 25' 50' 100'

LEGEND

EROSION LOG

TOE OF FILL

TOP OF CUT

LIMITS OF DISTURBANCE — LDA —

FLOW DIRECTION

AGGREGATE (GRAVEL) BAG

Print Date: 5/25/2016

File Name: 15D002LAND_ENVI_INT_Plan03.dgn

Horiz. Scale: 1:50 Vert. Scale: As Noted

FELSBURG HOLT & ULLEVIG
6300 South Syracuse Way
Suite 600
Centennial, CO 80111
(303) 721-1440

R-X

Sheet Revisions		
Date:	Comments	Init.

Town of Superior

CDOT Region 4
10601 W. 10th Street
Greeley, CO 80634

LHN

As Constructed

No Revisions:

Revised:

Void:

SUPERIOR TRAIL CONNECTION
INTERIM GRADING/EROSION CONTROL PLAN
STA. 100+00.00 TO 107+00.00

Designer: KMD

Detailer: KLT

Sheet Subset: EROSION

Structure Numbers

Subset Sheets: EN-3 of 4

Project No./Code

TAP M258-003

20671

Sheet Number 27

Ashley 8:54:32 AM I:\113166-02 - Superior Trail-BRT\15D002\Landscape_Environmental\Drawings\15D002LAND_ENVI_INT_Plan03.dgn

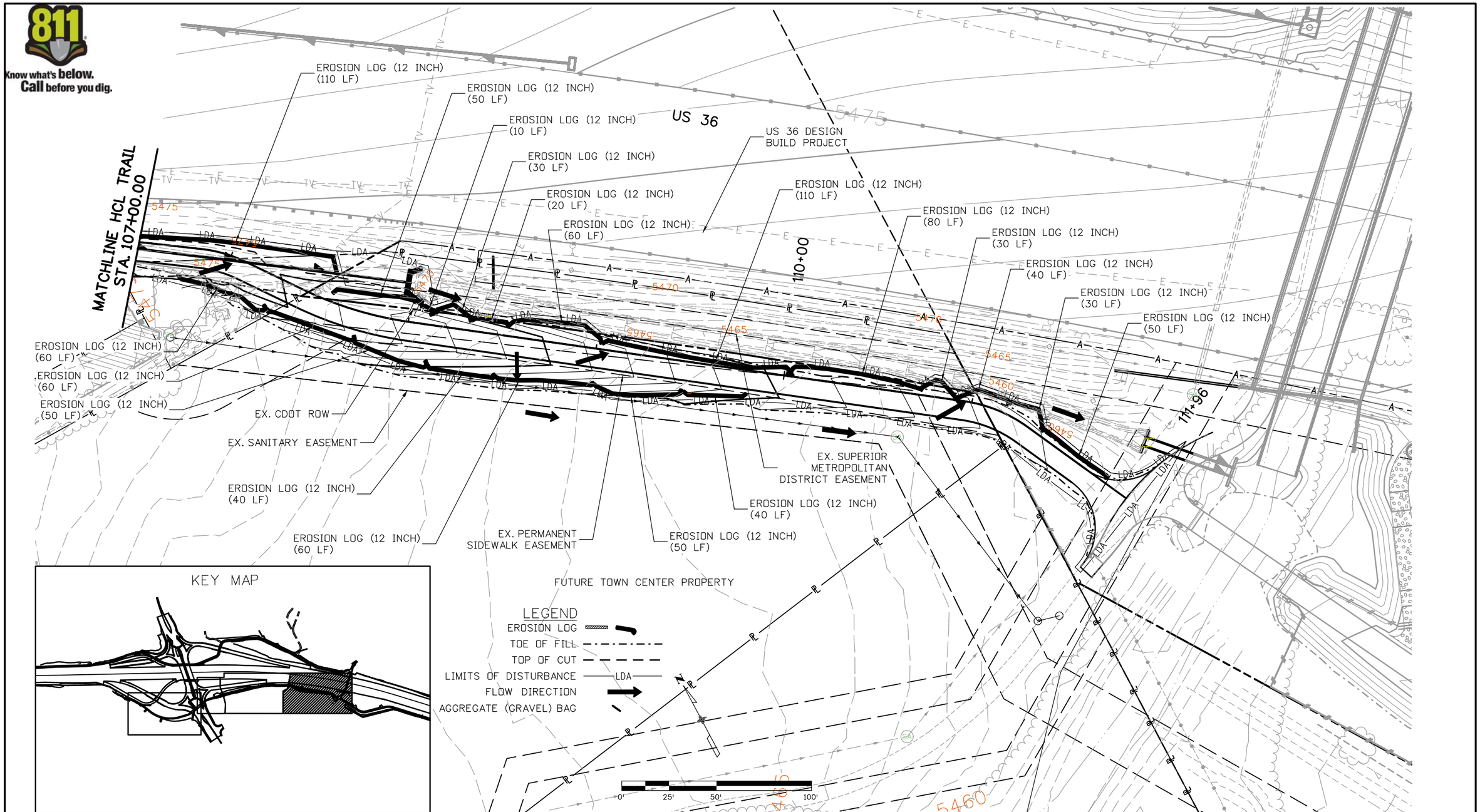

Print Date: 6/6/2016	R-X	Sheet Revisions	
File Name: 15D002LAND_ENVI_INT_Plan04.dgn		Date:	Comments	Init.
Horiz. Scale: 1:50 Vert. Scale: As Noted				

FELSBURG HOLT & ULLEVIG
6300 South Syracuse Way
Suite 600
Centennial, CO 80111
(303) 721-1440

Town of Superior

CDOT
Region 4
10601 W. 10th Street
Greeley, CO 80634

LHN

As Constructed
No Revisions:
Revised:
Void:

SUPERIOR TRAIL CONNECTION
INTERIM GRADING/EROSION CONTROL PLAN
STA. 107+00.00 TO 112+44.54

Designer:	KMD	Structure Numbers	
Detailer:	KLT		
Sheet Subset:	EROSION	Subset Sheets:	EN-4 of 4

Project No./Code
TAP M258-003
20671
Sheet Number 28

kat 3:10:51 PM I:\11\3166-02 - Superior Trail-BRT\15D002\Landscape_Environmental\Drawings\15D002LAND_ENVI_INT_Plan04.dgn

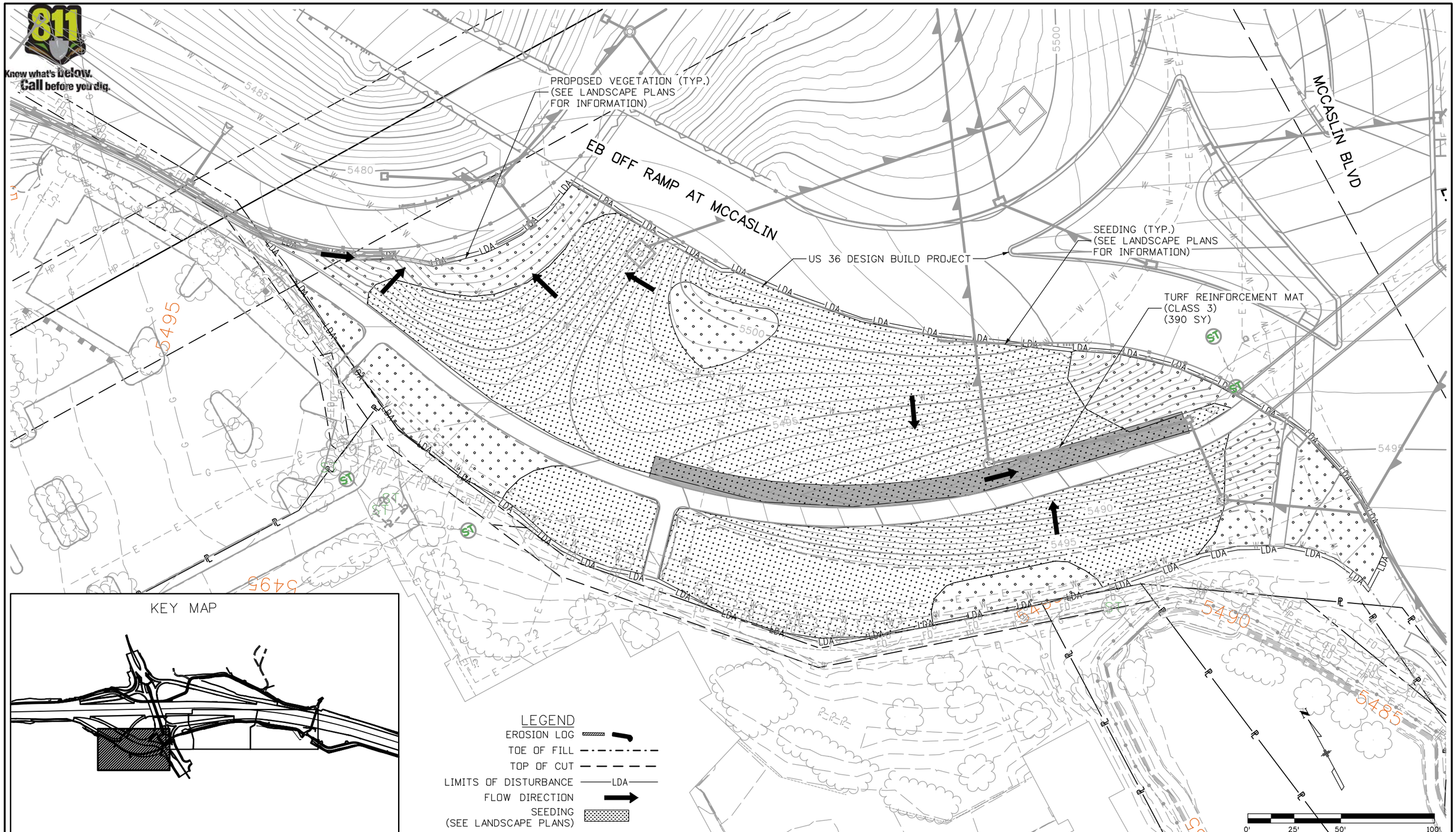

kat 1:16:02 PM I:\113166-02 - Superior Trail-BRT\15D002\Landscape_Environmental\Drawings\15D002LAND_ENVI_FIN_Plan01.dgn

Print Date: 6/6/2016		Sheet Revisions	
File Name: 15D002LAND_ENVI_FIN_Plan01.dgn	R-X	Date: / Comments / Init.	
Horiz. Scale: 1:50 Vert. Scale: As Noted			

FELSBURG HOLT & ULLEVIG
6300 South Syracuse Way
Suite 600
Centennial, CO 80111
(303) 721-1440

Town of Superior

CDOT
Region 4
10601 W. 10th Street
Greeley, CO 80634

LHN

As Constructed	SUPERIOR TRAIL CONNECTION FINAL GRADING/EROSION CONTROL PLAN SOUTHWEST QUADRANT LANDSCAPING		Project No./Code
No Revisions:	Designer: KMD	Structure Numbers	TAP M258-003
Revised:	Detailer: KLT		20671
Void:	Sheet Subset: EROSION	Subset Sheets: EF-1 of 4	Sheet Number 29

Know what's below. Call before you dig.

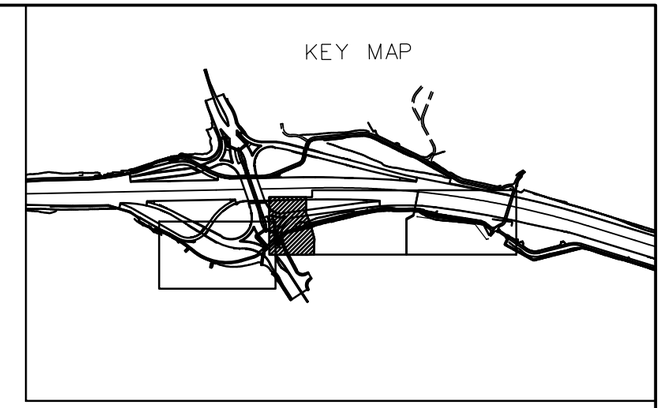

LEGEND

- EROSION LOG
- TOE OF FILL
- TOP OF CUT
- LIMITS OF DISTURBANCE —LDA—
- FLOW DIRECTION
- SEEDING (SEE LANDSCAPE PLANS)

N

0' 25' 50' 100'

Print Date: 5/25/2016
File Name: 15D002LAND_ENVI_FIN_Plan02.dgn
Horiz. Scale: 1:50 Vert. Scale: As Noted

FELSBURG HOLT & ULLEVIG
6300 South Syracuse Way
Suite 600
Centennial, CO 80111
(303) 721-1440

R-X

Sheet Revisions		
Date:	Comments	Init.

Town of Superior

CDOT Region 4
10601 W. 10th Street
Greeley, CO 80634

LHN

As Constructed
No Revisions:
Revised:
Void:

SUPERIOR TRAIL CONNECTION
FINAL GRADING/EROSION CONTROL PLAN

Designer: KMD
Detailer: LMG
Sheet Subset: EROSION
Structure Numbers
Subset Sheets: EF-2 of 4

Project No./Code
TAP M258-003
20671
Sheet Number 30

Ashley 8:54:38 AM I:\13166-02 - Superior Trail-BRT\15D002\Landscape_Environmental\Drawings\15D002LAND_ENVI_FIN_Plan02.dgn

Know what's below. Call before you dig.

US 36 DESIGN BUILD PROJECT

US 36

EB ON RAMP AT MCCASLIN

00+00

SEEDING (NATIVE) (0.14 AC)

SEEDING (NATIVE) (0.05 AC)

SEEDING (NATIVE) (0.06 AC)

SEEDING (NATIVE) (0.02 AC)

EX. ROW

EX. CDOT ROW

MATCHLINE HCL TRAIL STA. 107+00.00

MATCHLINE HCL TRAIL STA. 100+00.00

PARCEL II

SUPERIOR PLAZA SUBDIVISION
P-38 F-3 #26

5490 5485 5480 5475 5470

KEY MAP

LEGEND

EROSION LOG

TOE OF FILL

TOP OF CUT

LIMITS OF DISTURBANCE — LDA —

FLOW DIRECTION

SEEDING (SEE LANDSCAPE PLANS)

0' 25' 50' 100'

Print Date: 5/25/2016

File Name: 15D002LAND_ENVI_FIN_Plan03.dgn

Horiz. Scale: 1:50 Vert. Scale: As Noted

FELSBURG HOLT & ULLEVIG
6300 South Syracuse Way
Suite 600
Centennial, CO 80111
(303) 721-1440

R-X

Sheet Revisions		
Date:	Comments	Init.

Town of Superior

CDOT

Region 4
10601 W. 10th Street
Greeley, CO 80634

LHN

As Constructed

No Revisions:

Revised:

Void:

SUPERIOR TRAIL CONNECTION
FINAL GRADING/EROSION CONTROL PLAN
STA. 100+00.00 TO 107+00.00

Designer: KMD

Detailer: KLT

Sheet Subset: EROSION

Structure Numbers

Subset Sheets: EF-3 of 4

Project No./Code

TAP M258-003

20671

Sheet Number 31

Ashley 8:54:40 AM I:\113166-02 - Superior Trail-BRT\15D002\Landscape_Environmental\Drawings\15D002LAND_ENVI_FIN_Plan03.dgn

Know what's below. Call before you dig.

MATCHLINE HCL TRAIL STA. 107+00.00

US 36

SOIL RETENTION BLANKET (STRAW/COCONUT) (117 SY)

US 36 DESIGN BUILD PROJECT

SEEDING (NATIVE) (0.09 AC)

SOIL RETENTION BLANKET (STRAW/COCONUT) (40 SY)

110+00

111+96

EX. CDOT ROW

EX. SANITARY EASEMENT

EX. PERMANENT SIDEWALK EASEMENT

EX. SUPERIOR METROPOLITAN DISTRICT EASEMENT

SEEDING (NATIVE) (0.10 AC)

FUTURE TOWN CENTER PROPERTY

KEY MAP

LEGEND

EROSION LOG

TOE OF FILL

TOP OF CUT

LIMITS OF DISTURBANCE — LDA —

FLOW DIRECTION

SEEDING (SEE LANDSCAPE PLANS)

0' 25' 50' 100'

Ashley 8:54:41 AM I:\113166-02 - Superior Trail-BRT\15D002\Landscape_Environmental\Drawings\15D002LAND_ENVI_FIN_Plan04.dgn

Print Date: 5/25/2016	Sheet Revisions		
File Name: 15D002LAND_ENVI_FIN_Plan04.dgn	Date:	Comments	Init.
Horiz. Scale: 1:50 Vert. Scale: As Noted			

R-X

FELSBURG HOLT & ULLEVIG
6300 South Syracuse Way
Suite 600
Centennial, CO 80111
(303) 721-1440

Town of Superior

CDOT Region 4
10601 W. 10th Street
Greeley, CO 80634

LHN

As Constructed
No Revisions:
Revised:
Void:

SUPERIOR TRAIL CONNECTION
FINAL GRADING/EROSION CONTROL PLAN
STA. 107+00.00 TO 112+44.54

Designer: KMD
Detailer: KLT
Structure Numbers
Sheet Subset: EROSION
Subset Sheets: EF-4 of 4

Project No./Code
TAP M258-003
20671
Sheet Number 32

Know what's below.
Call before you dig.

1. SITE DESCRIPTION

To fulfill the CDPS-SCP (Colorado Discharge Permit System - Stormwater Construction Permit). The ECS shall update to reflect current project site conditions.

A. PROJECT SITE DESCRIPTION

The project includes the following elements:

- 47/64 Construction of 3,000 feet of new sidewalk,
- 47/64 Landscaping areas adjacent to the trail or where spacing allows,
- 47/64 Connecting to existing sidewalks and regional trails, and
- 47/64 Retaining walls to minimize impacts to US 36 drainage swale.

The Proposed Trail is partially located within CDOT's ROW, but will be maintained by the Town of Superior.

B. PROPOSED SEQUENCING FOR MAJOR CONSTRUCTION ACTIVITIES: clearing and grubbing, grading, drainage, excavation, trail construction

C. ACRES OF DISTURBANCE
1. Total area of construction site: 3.2 acres
2. Total area of disturbance: 3.2 acres
3. Acreage of seeding: 1.8 acres

D. EXISTING SOIL DATA: Nederland very cobbly sandy loam, 1 to 12 percent slopes

E. EXISTING VEGETATION, INCLUDING PERCENT COVER

Date of survey: 10/13/2015 %Density: _____
Description of existing vegetation:

The project area has been cleared and grubbed as part of the construction of the US 36 corridor. Activities observed during the field survey included work on the US 36 trapezoidal drainage ditch and nearby paving activities. No natural vegetation was observed within the project area. A narrow section of landscaping exists where the Proposed Trail would be constructed. The landscaped vegetation included such species as: Ponderosa pine (Pinus ponderosa), common juniper (Juniperus communis), Russian olive (Elaeagnus angustifolia), crabapple (Malus spp.), green ash (Fraxinus pennsylvanica), and various ornamental grasses.

Map or table showing transect locations in tab 19:

F. POTENTIAL POLLUTANTS SOURCES: See First Construction Activities under Potential Pollutant Sources. The ECS shall prepare a list of all potential pollutants and their locations in accordance with subsection 107.25.

G. RECEIVING WATER
1. Outfall locations: Storm drains are as shown on plans. ditch/culvert located on north side of project flows to coal creek on east side of project
2. Names of receiving water(s) on site and the ultimate receiving water: Coal Creek
3. Distance ultimate receiving water is from project: adjacent to site

H. ALLOWABLE NON-STORMWATER DISCHARGES
1. Groundwater and stormwater dewatering: Discharges to the ground of water from construction dewatering activities may be authorized provided that:
   a. the source is groundwater and/or groundwater combined with stormwater that does not contain pollutants
   b. the source and BMPs are identified in the SWMP
   c. discharges do not leave the site as surface runoff or to surface waters
   d. The contractor shall protect all work areas and facilities from water at all times. Areas and facilities subject to flooding, regardless of the source of water, shall be promptly dewatered and restored at no cost to the owner. This shall include removal of any debris caused by flooding. Any dewatering shall be done in accordance with Subsection 107.25
2. If discharges do not meet the above criteria a separate CDPS permit shall be obtained by the Contractor from the CDPHE. See standard special provision 250 Hazardous Waste and Contaminated Water.

I. ENVIRONMENTAL IMPACTS;
1. Wetland Impacts: YES NO
2. Stream Impacts: YES NO
3. Threatened and Endangered Species: No species are anticipated to be impacted by the project.

2. SITE MAP COMPONENTS

Pre-construction

A. PROJECT CONSTRUCTION POTENTIAL SITE BOUNDARIES See SWMP Site Maps

B. ALL AREAS OF GROUND SURFACE DISTURBANCE See SWMP Site Maps

C. AREAS OF CUT AND FILL See SWMP Site Maps

D. LOCATION OF ALL STRUCTURAL BMPs IDENTIFIED IN THE SWMP See SWMP Site Maps

E. LOCATION OF NON-STRUCTURAL BMPs AS APPLICABLE IN THE SWMP See SWMP Site Maps

F. SPRINGS, STREAMS, WETLANDS AND OTHER SURFACE WATER See SWMP Site Maps

G. PROTECTION OF TREES, SHRUBS, CULTURAL RESOURCES AND MATURE VEGETATION See SWMP Site Maps

H. AREAS USED FOR STORING AND STOCKPILING OF MATERIALS, STAGING AREAS (field trailer, fueling, etc.) and BATCH PLANTS

3. SWMP ADMINISTRATORS:

A. SWMP ADMINISTRATOR FOR DESIGN:
Name/Title: Kate Oberleas, PE Contact information: Felsburg, Holt and Ullevig (303) 721-1440

4. STORMWATER MANAGEMENT CONTROLS FIRST CONSTRUCTION ACTIVITIES

THE CONTRACTOR SHALL PERFORM THE FOLLOWING:

A. POTENTIAL POLLUTANT SOURCES

Evaluate, identify and describe all potential sources of pollutants at the site in accordance with subsection 107.25 and place in the SWMP notebook. All BMPs related to potential pollutants shall be shown on the SWMP site map by the contractor's ECS.

B. BEST MANAGEMENT PRACTICES (BMPs) FOR STORMWATER POLLUTION PREVENTION

PHASED BMP IMPLEMENTATION

During Design: "BMP as Designed" boxes are marked when used in the SWMP. During construction: the ECS shall update the "In use on site" boxes to match which BMPs are currently in use on site. Clearly describe the relationship between the phases of construction and the implementation of BMP controls.

STRUCTURAL BMPs that may be potentially used on the project for erosion and sediment control; practices may include, but are not limited to:

APPLICATION, BMP	NARRATIVE	BMP AS DESIGNED	IN USE ON SITE	BMP PHASING		
				FIRST/INITIAL CONSTRUCTION ACTIVITIES	INTERIM CONSTRUCTION ACTIVITIES	FINAL STABILIZATION
PROTECTION OF EXISTING WETLANDS Fence (plastic) and erosion logs	Fence (plastic) shall be placed in combination with erosion logs to prevent encroachment of construction traffic and sediment into state waters prior to start of construction disturbances. Fence (plastic) shall be placed adjacent to the wetlands; erosion logs shall be placed between the plastic fence and disturbance area. Logs shall be placed to direct flows away from or filter water running into wetlands from disturbance areas.			X	X	
PROTECTION OF EXISTING TREES/LANDSCAPING Fence (plastic)	Fence (plastic) shall be used in areas indicated in the plans to protect mature trees and/or existing landscaping prior to start of construction disturbances.			X	X	
CHECK DAM/DITCH CHECK Erosion log, silt berm, silt dike, rock check dam	Placed in ditches immediately upon completion of ditch grading to reduce velocity of runoff in ditch. For existing ditches, place prior to start of construction disturbances.			X	X	X
TYPE R AND TYPE 16 INLET PROTECTION Storm drain inlet protection (type 1,2 and 3)	Placed prior to construction disturbances to protect existing inlets or immediately upon completion of new inlets to prevent sediment from entering the inlet throughout construction.			X	X	X
CULVERT INLET/OUTLET PROTECTION Erosion logs, aggregate bags	Placed at mouth of culvert inlets and over top of culvert at inlet and outlet where disturbance may be occurring adjacent to pipe to prevent sediment laden water from entering pipe or drainage. Place prior to start of construction disturbances.			X	X	X
TYPE C, TYPE D AND TYPE 13 PROTECTION Erosion logs, aggregate bags, erosion bales	Placed around inlet grate or slope and ditch paving to prevent sediment from entering inlet. Place prior to start of construction disturbances.			X	X	X
STOCKPILE PROTECTION Temporary berm, erosion logs, aggregate bags*	Placed within specified distance from toe to contain sediment around stockpile. *Aggregate bags are easily moved and replaced for access during the work day. Place prior to start of stock pile, increase control as stock pile increases size.				X	
TOE OF FILL PROTECTION Erosion logs, temporary berm, silt fence, topsoil windrow*	Place prior to slope/embankment work to capture sediment and protect and delineate undisturbed areas. *Can be used to stockpile topsoil for salvage.			X	X	

Know what's below.
Call before you dig.

APPLICATION, BMP	NARRATIVE	BMP AS DESIGNED	IN USE ON SITE	BMP PHASING		
				FIRST/INITIAL CONSTRUCTION ACTIVITIES	INTERIM CONSTRUCTION ACTIVITIES	FINAL STABILIZATION
PERIMETER CONTROL Erosion logs, silt fence, temporary berm, topsoil windrow*	Placed prior to construction commencing to address potential run-on water from off site, and to divert around disturbed area			X	X	
SEDIMENT CONTROL/ SLOPE CONTROL Silt fence, erosion logs	Placed on the contour on a slope to contain and slow down construction runoff. Place prior to start of construction disturbances.			X	X	
TEMPORARY SEDIMENT TRAP (ECS shall add locations to SWMP site maps)	Used to capture sediment laden runoff from disturbed areas < 5 acres during construction. Place prior to start of construction disturbances.			X	X	
PERMANENT SEDIMENT BASIN Extended detention basin	Constructed early in project, prior to storm sewer/ditches to capture storm flow as a temporary sediment trap. Outlet structure shall be modified for construction runoff.			X	X	
EMBANKMENT PROTECTION OR TEMPORARY SLOPE DRAIN	Placed as a conduit or chute to drain runoff down slope and to prevent erosion of slope.				X	X
OUTLET PROTECTION Riprap, or approved other	Material placed as energy dissipater to prevent erosion at outlet structure.				X	X
CONCRETE WASHOUT In-ground or fabricated	Construction control, used for waste management of concrete and concrete equipment cleaning. Place prior to start of concrete activities.			X	X	
VEHICLE TRACKING PAD	Source control, placed to prevent tracking of sediment from disturbed area to offsite surface. Place prior to start of construction disturbances.			X	X	
SWEEPING	Source control, used to remove sediment tracked onto paved surfaces and to prevent from entering drainage system. Sweep daily and at the end of the construction shift as needed. Kick brooms shall not be allowed.			X	X	
DEWATERING (Contractor is responsible for obtaining a permit from Colorado Department of Health and Environment.)	Shall be done in such a manner to prevent potential pollutants from entering state waters.			X	X	
TEMPORARY STREAM CROSSING	Constructed over stream or drainage to prevent discharge of pollutants from construction equipment into water			X	X	
CLEAN WATER DIVERSION	Placed to divert clean surface or ground water around disturbance area to prevent it from mixing with construction runoff			X	X	
OTHER						

NON-STRUCTURAL BMPs that may be potentially used on the project for erosion and sediment control; practices may include, but are not limited to:

APPLICATION, BMP	NARRATIVE	BMP AS DESIGNED	IN USE ON SITE	BMP PHASING		
				FIRST/INITIAL CONSTRUCTION ACTIVITIES	INTERIM CONSTRUCTION ACTIVITIES	FINAL STABILIZATION
VEGETATIVE BUFFER STRIP Fence (plastic)	Filter sediment laden runoff from disturbance area. Area to be identified for preservation prior to construction starting.			X	X	X
LANDFORM (ECS shall add locations to SWMP site maps)	Existing landforms may be used as a BMP if they prevent sediment from entering or leaving the disturbance area. If a landform directs flow of water to a concentrated outfall point, the outfall point shall be protected to prevent erosion.			X	X	
TOPSOIL MANAGEMENT STOCKPILE/SALVAGE Windrow or stockpile	Prior to embankment work commencing, existing topsoil shall be scraped to a depth of 4 inches, and placed in stockpiles or windrows. Upon completion of slope work/final grading (less 4 inches), topsoil shall be evenly distributed over embankment to a depth of 4 inches.			X	X	
SURFACE ROUGHENING / GRADING TECHNIQUES Blading, Backhoe, Dozing, Combination Loader	Temporary stabilization of disturbance and to minimize wind and erosion.				X	
SEEDING TEMPORARY	Temporary stabilization used for over wintering of disturbance or used to control erosion for areas scheduled for future construction.				X	
BONDED FIBER MATRIX/HYDRAULIC MULCH (Not to be used in areas of concentrated flows, i.e. ditch lines.)	To be used in combination with surface roughening for temporary stabilization of disturbed soils, when work is temporarily halted and as approved by the Engineer. May be used as surface cover for temporary topsoil stockpiles				X	
MULCH/MULCH TACKIFIER	Temporary or Final Stabilization placed as a surface cover for erosion control and or seeding establishment. To be installed as temporary surface cover when work is temporarily halted and as approved by the Engineer				X	X
SPRAY-ON MULCH BLANKET (Not to be used in areas of concentrated flows, i.e. ditch lines.)	Temporary or Final Stabilization placed as a surface cover for erosion control and or seeding establishment. To be installed as temporary surface cover when work is temporarily halted and as approved by the Engineer				X	X
SEEDING PERMANENT	Final Stabilization of disturbance and to reduce runoff and control erosion on disturbed areas.					X
SOIL RETENTION BLANKET (SRB)	Final Stabilization of disturbance and to reduce runoff and control erosion on disturbed areas.				X	X
TURF REINFORCEMENT MAT (TRM)	Final Stabilization of disturbance and to reduce runoff and control erosion on disturbed areas. Placed in channels or on slopes for erosion control, channel liner and seeding establishment.				X	X
OTHER						

Erosion control devices are used to limit the amount of soil loss on site
Sediment control devices are designed to capture sediment on the project site.
Construction controls are BMPs related to construction access and staging.
BMP locations are indicated on the SWMP site map.

NARRATIVES
BMP details and narratives not covered by the SWMP or Standard Plan M-208-1 shall be added to the SWMP notebook by the ECS.
D. OFFSITE DRAINAGE (RUN ON WATER)

Print Date: 5/25/2016
File Name: 15D002LAND_ENVI_NOTES_Plan01.dgn
Horiz. Scale: 1:1 Vert. Scale: As Noted

FELSBURG HOLT & ULLEVIG
6300 South Syracuse Way
Suite 600
Centennial, CO 80111
(303) 721-1440

R-X

Sheet Revisions

Date:	Comments	Init.

Town of Superior

CDOT
Region 4
10601 W. 10th Street
Greeley, CO 80634

LHN

As Constructed
No Revisions:
Revised:
Void:

SUPERIOR TRAIL CONNECTION GRADING/EROSION CONTROL PLAN NOTES

Designer: KMD
Detailer: LMG
Sheet Subset: EROSION
Structure Numbers
Subset Sheets: GN-2 of 3

Project No./Code
TAP M258-003
20671
Sheet Number 34

Ashley 8:54:43 AM I:\13166-02 - Superior Trail-BRT\15D002\Landscape_Environmental\Drawings\15D002LAND_ENVI_NOTES_Plan01.dgn

Know what's below.
Call before you dig.

1. Describe and record BMPs on the SWMP site map that has been implemented to address off site run-on water in accordance with subsection 208.03.

E. VEHICLE TRACKING PAD/VEHICLE TRACKING CONTROL
1. BMPs shall be implemented in accordance with subsection 208.04.

F. PERIMETER CONTROL
1. Perimeter control shall be established as the first item on the SWMP to prevent the potential for pollutants leaving the construction site boundaries, entering the stormwater drainage system, or discharging to state waters.
2. Perimeter control may consist of vegetation buffers, berms, silt fence, erosion logs, existing landforms, or other BMPs as approved.
3. Perimeter control shall be in accordance with subsection 208.04.

5. DURING CONSTRUCTION
RESPONSIBILITIES OF THE SWMP ADMINISTRATOR/TRANSPORTATION EROSION CONTROL SUPERVISOR DURING CONSTRUCTION
The SWMP should be considered a 8living documentH that is continuously reviewed and modified. During construction, the following items shall be added, updated, or amended as needed by the SWMP Administrator/Erosion Control Supervisor (ECS) in accordance with Section 208.
During construction, indicate how items that have not been addressed during design are being handled in construction. If items are covered in the template or other sections of the SWMP notebook indicate below what section the discussion takes place.

A. STOCKPILE MANAGEMENT - shall be done in accordance with subsection 107.25 and 208.07

B. CONCRETE WASHOUT - Concrete wash out water or waste from field laboratories and paving equipment shall be contained in accordance with subsection 208.05.

C. SAW CUTTING- shall be done in accordance with subsection 107.25, 208.04, 208.05

D. STREET CLEANING - shall be done in accordance with subsection 208.04

6. INSPECTIONS

A. Inspections shall be in accordance with subsection 208.03 (c).

7. BMP MAINTENANCE

A. Maintenance shall be in accordance with subsection 208.04 (f).

8. RECORD KEEPING

A. Records shall be kept in accordance with subsection 208.03 (c).

9. INTERIM AND FINAL STABILIZATON

A. SEEDING PLAN

Soil preparation, soil conditioning or topsoil, seeding (native), mulching (weed free) and mulch tackifier will be required for an estimated 1.7 acres of disturbed area within the right-of-way limits which are not surfaced. The following types and rates shall be used:

COMMON NAME	BOTANICAL NAME	LBS. PLS PER ACRE
Side Oats Gramma	Bouteloua curtipendula	2.74
Blue Gramma	Bouteloua gracilis	0.84
Buffalo Grass	Buchloe dactyloides	9.33
Western Wheatgrass	Pascopyrum smithii (Arriba Variety)	3.96
Western Wheatgrass	Pascopyrum smithii (Natural Variety)	3.96
Little Bluestem	Schizachyrium scoparium	1.74
Green Needlegrass	Stipa viridula	2.31
TOTAL		24.88

B. SEEDING APPLICATION Drill seed 0.25 inch to 0.5 inch into the soil. In small areas not accessible to a drill, hand broadcast or hydroseed at double the rate and rake 0.25 inch to 0.5 inch into the soil.

C. MULCHING APPLICATION: Apply a minimum of 2 tons of certified weed free straw or 2 tons of certified weed free straw per acre and in accordance with Section 213, and mechanically crimp it into the soil in combination with an organic mulch tackifier.
a. Prior to winter shutdown or the summer seeding window: Uncompleted slopes shall be mulched with 2 tons of mulching (weed free) per acre, mechanically crimped into the topsoil in combination with an organic mulch tackifier per section 213.

D. SPECIAL REQUIREMENTS:
1. Due to high failure rates, hydroseeding will not be allowed.

E. SOIL CONDITIONING AND FERTILIZER REQUIREMENTS[Minimum requirements for all disturbances to receive seeding (native). Compost is optional within areas above 8000 ft in elevation] Soil conditioner paid for as Item 212-Soil Conditioning (Acre).

Biological nutrient organic based fertilizer (lbs/acre)*	Humate (lbs/acre)	Compost (cy/acre) (1/2 inch depth)
600	200	65

*Biological nutrient shall not exceed 8-8-8 (N-P-K). Humate based material and compost shall be in accordance to Section 212.

F. SOIL RETENTION COVERING: On slopes and ditches requiring a blanket or turf reinforcement mat (trm), the blanket/trm shall be placed in lieu of mulch and mulch tackifier. See SWMP for blanket locations.

G. RESEEDING OPERATIONS/CORRECTIVE STABILIZATION
Prior to final acceptance.
1. Seeded areas shall be reviewed during the 14 day inspections by the Erosion Control Supervisor for bare soils caused by surface or wind erosion. Bare areas caused by surface or gully erosion, blown away mulch, etc. shall be re-graded, seeded, and have the designated mulching applied as necessary, at no additional cost to the project.
2. The Contractor shall maintain seeding/mulch/tackifier, mow to control weeds or apply herbicide to control weeds in the seeded areas until Final Acceptance.

10. PRIOR TO FINAL ACCEPTANCE
A. Final Acceptance shall be in accordance with subsection 208.10 At the Partial Acceptance of the project, it shall be determined by the ECS and the Engineer which temporary BMP's shall remain until 70% reestablishment or which shall be removed.
B. At the end of the project, all ditch checks shall either consist of temporary erosion logs or permanent rip-rap.
C. All storm drains shall be cleaned prior to the end of the project. Work shall be included in 203 Clean Culvert.

11. TABULATION OF STORMWATER QUANTITIES

Pay Item	Description	Pay Unit	*Quantity
202-04002	Clean Culvert	Each	1
203-02330	Laborer	Hour	40
208-00002	Erosion Log (12 Inch)	LF	4,080
208-00035	Aggregate Bag	LF	220
208-00045	Concrete Washout Structure	Each	1
208-00051	Storm Drain Inlet Protection (Type1)	LF	14
208-00070	Vehicle Tracking Pad	Each	2
208-00103	Removal and Disposal of Sediment (Labor)	Hour	40
208-00106	Sweeping (Sediment Removal)	Hour	16
208-00107	Removal of Trash	Hour	8
208-00206	Erosion Control Supervisor	Day	15
212-00006	Seeding (Native)	Acre	0.22
216-00101	Soil Retention Blanket (Straw/Coconut) (Photodegradable Class 1)	SY	157
700-70380	Erosion Control	FA	1

*It is anticipated that additional BMPs and BMP quantities not shown on the SWMP Site Maps shall be required on the project for unforeseen conditions and replacement of items that are beyond their useful service life, see subsection 208.03 and 208.04 (e). Quantities for all BMPs shown above are estimated, and have been increased for unforeseen Project conditions. Quantities shall be adjusted according to the conditions encountered in the field as directed and approved by the Engineer. Payment shall be for the actual work completed and material used.

A. BMP sediment removal and disposal shall be paid for as: 208 Removal and Disposal of Sediment (Equipment) or 208 Removal and Disposal of Sediment (Labor). All other BMP maintenance shall be included in the cost of the BMP Device.

B. It is estimated that 40 hours of labor, blading, dozing, combination loader and/or backhoe may be required for miscellaneous erosion control work as directed by the Engineer. Work shall be paid for as 203 Labor, 203 Blading, 203 Dozing, 203 Combination Loader or 203 Backhoe.

C. Maintenance of seeded areas shall be paid for as: FA Erosion Control

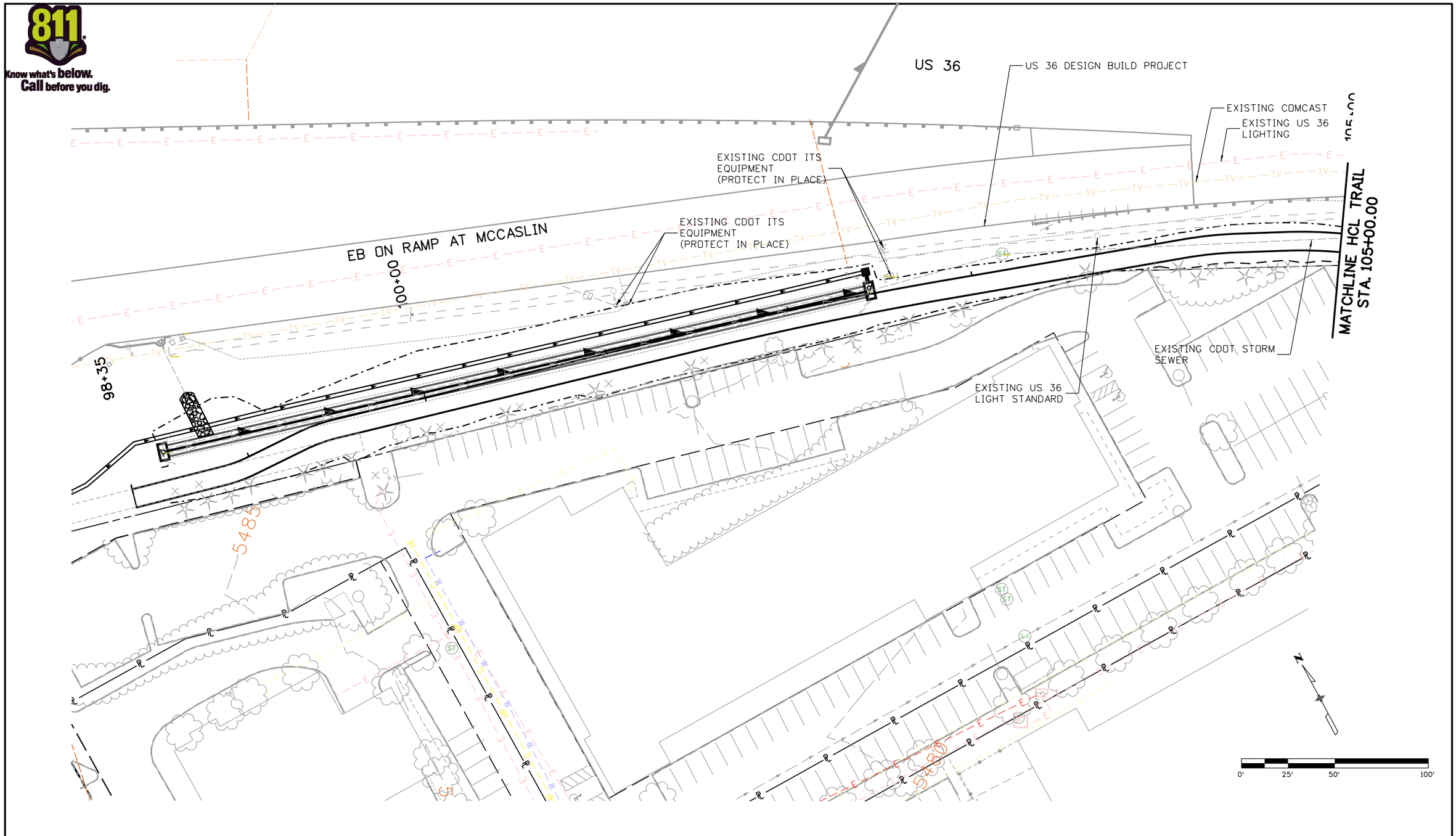

Print Date: 5/25/2016
File Name: 15D002UTL_Plan01.dgn
Horiz. Scale: 1:50 Vert. Scale: As Noted

FELSBURG HOLT & ULLEVIG
6300 South Syracuse Way
Suite 600
Centennial, CO 80111
(303) 721-1440

R-X

Sheet Revisions		
Date:	Comments	Init.

Town of Superior

CDOT Region 4
10601 W. 10th Street
Greeley, CO 80634

LHN

As Constructed
No Revisions:
Revised:
Void:

SUPERIOR TRAIL CONNECTION
UTILITY PLAN
STA. 98+34.91 TO 105+00.00

Designer: KMD
Detailer: AMD
Sheet Subset: ROADWAY
Structure Numbers
Subset Sheets: UTL-1 of 2

Project No./Code
TAP M258-003
20671
Sheet Number 36

Ashley 8:54:46 AM I:\113166-02 - Superior Trail-BRT\15D002\Utilities\Drawings\15D002UTL_Plan01.dgn

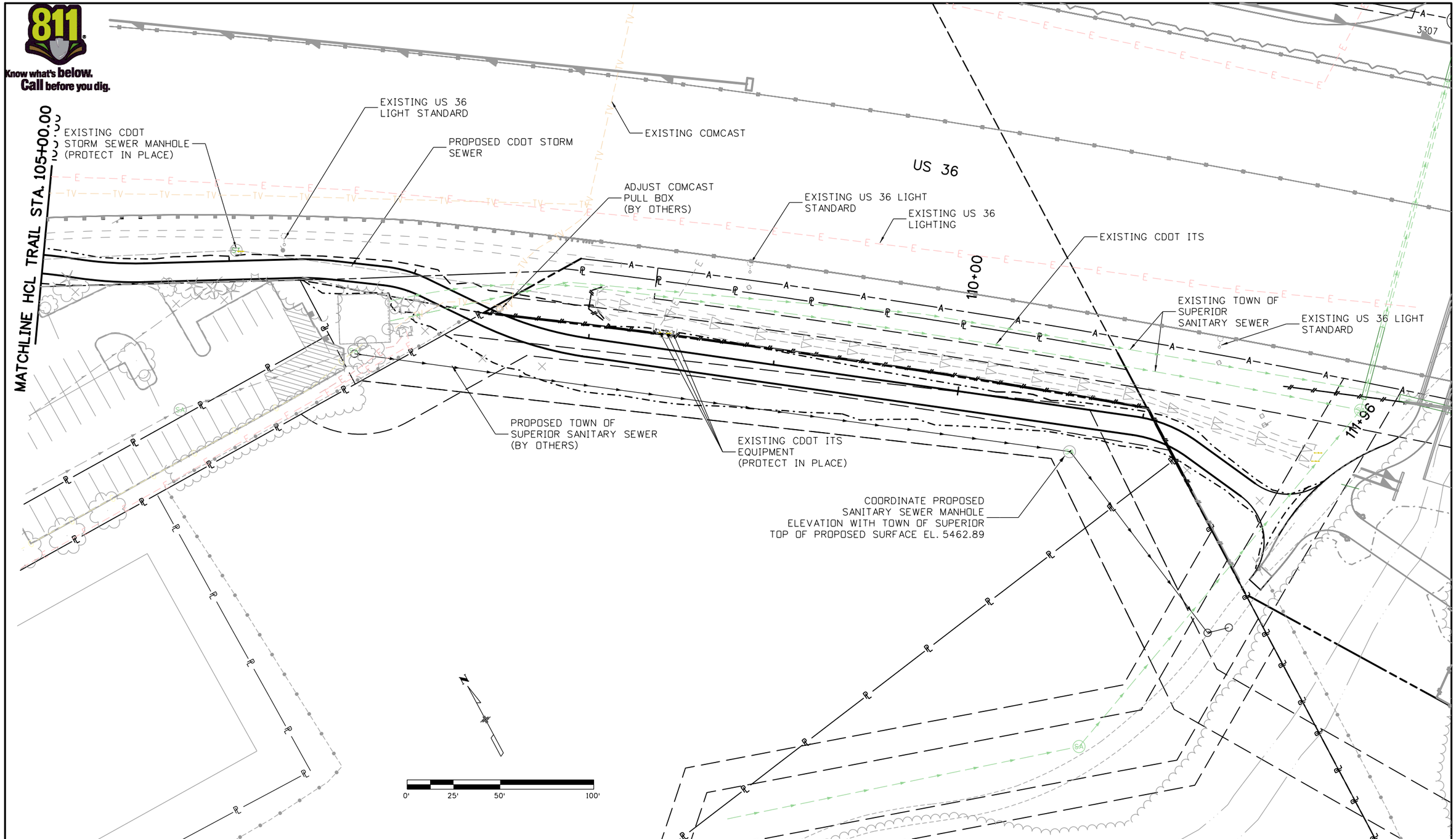

Ashley 8:54:47 AM I:\113166-02 - Superior Trail-BRT\15D002\Utilities\Drawings\15D002UTL_Plan02.dgn

Print Date: 5/25/2016
File Name: 15D002UTL_Plan02.dgn
Horiz. Scale: 1:50 Vert. Scale: As Noted

FELSBURG HOLT & ULLEVIG
6300 South Syracuse Way
Suite 600
Centennial, CO 80111
(303) 721-1440

R-X

Sheet Revisions		
Date:	Comments	Init.

Town of Superior

CDOT Region 4
10601 W. 10th Street
Greeley, CO 80634

LHN

As Constructed
No Revisions:
Revised:
Void:

SUPERIOR TRAIL CONNECTION
UTILITY PLAN
STA. 105+00.00 TO 111+96.42

Designer: KMD
Detailer: AMO
Sheet Subset: UTILITY
Structure Numbers
Subset Sheets: UTL-2 of 2

Project No./Code
TAP M258-003
20671
Sheet Number 37

Know what's **below.**
Call before you dig.

NOTES:

1. ALL PLANT BED AREAS SHALL RECEIVE A 4" DEPTH AMENDED TOPSOIL.
2. STAKE ALL PLANT LOCATIONS FOR APPROVAL BY PROJECT LANDSCAPE ARCHITECT PRIOR TO INSTALLATION.
3. CONTRACTOR SHALL BE RESPONSIBLE FOR BECOMING AWARE OF ALL RELATED EXISTING CONDITIONS, UTILITIES, PIPES AND STRUCTURES, ETC. PRIOR TO BIDDING AND CONSTRUCTION. THE CONTRACTOR SHALL BE HELD RESPONSIBLE FOR CONTACTING ALL UTILITY COMPANIES FOR FIELD LOCATION OF ALL UNDERGROUND UTILITY LINES, INCLUDING DEPTHS, PRIOR TO ANY EXCAVATION. CONTRACTOR SHALL TAKE SOLE RESPONSIBILITY FOR ANY AND ALL COST OR OTHER LIABILITIES INCURRED DUE TO DAMAGE OF SAID UTILITIES/STRUCTURES/ETC.
4. THE CONTRACTOR SHALL NOT WILLFULLY PROCEED WITH CONSTRUCTION AS DESIGNED WHEN IT IS APPARENT THAT UNKNOWN OBSTRUCTIONS AND/OR GRADE DIFFERENCES EXIST THAT MAY NOT HAVE BEEN KNOWN DURING DESIGN. SUCH CONDITIONS SHALL BE IMMEDIATELY BROUGHT TO THE ATTENTION OF THE OWNERS REPRESENTATIVE FOR CLARIFICATION. THE CONTRACTOR SHALL ASSUME FULL RESPONSIBILITY FOR ALL LIABILITIES, INCLUDING NECESSARY REVISIONS DUE TO FAILURE TO GIVE SUCH NOTIFICATION.
5. CONTRACTOR SHALL BE RESPONSIBLE FOR ANY COORDINATION WITH SUBCONTRACTORS AS REQUIRED TO ACCOMPLISH ALL PLANTING AND RELATED OPERATIONS.
6. SEE SPECIFICATIONS AND DETAILS FOR PLANTING METHODS, REQUIREMENTS, SOIL TESTING, MATERIALS EXECUTION AND PLANT PROTECTION.
7. IF CONFLICTS ARISE BETWEEN SIZE OF AREAS AND PLANS, CONTRACTOR IS REQUIRED TO CONTACT OWNERS REPRESENTATIVE FOR RESOLUTION. FAILURE TO MAKE CONFLICTS KNOWN TO THE OWNERS REPRESENTATIVE WILL RESULT IN CONTRACTORS LIABILITY TO RELOCATE THE MATERIALS.
8. IT IS THE CONTRACTOR'S RESPONSIBILITY TO FURNISH ALL PLANT MATERIALS FREE FROM PEST OR PLANT DISEASE. PRE-SELECTED OR TAGGED MATERIAL MUST BE INSPECTED BY THE OWNERS REPRESENTATIVE AND/OR LANDSCAPE ARCHITECT AND CERTIFIED PEST AND DISEASE FREE. IT IS THE CONTRACTORS OBLIGATION TO MAINTAIN AND WARRANTY ALL PLANT MATERIALS PER THE SPECIFICATIONS. ALL TREES SHALL BE APPROVED BY OWNERS REPRESENTATIVE AND OR LANDSCAPE ARCHITECT PRIOR TO PLANTING.
9. THE CONTRACTOR SHALL FINE GRADE, RAKE AND BE RESPONSIBLE FOR POSITIVE DRAINAGE AWAY FROM ALL STRUCTURES AND THROUGHOUT, WITH ACCURATELY SET FLOW LINES. NO LOW SPOTS OR PONDING OF SURFACE WATER WILL BE ACCEPTED IN THE FINAL WORK . NO ROCKS OR DEBRIS WILL BE ACCEPTED. FINAL GRADE TOLERANCES ARE +/-.1 FOOT MINIMUM.
10. ALL PLANTING BEDS TO BE SEPARATED FROM ADJACENT TURF AREAS WITH STEEL EDGER PER SPECIFICATIONS. STAKE PER PLANS FOR REVIEW/ACCEPTANCE BY OWNERS REPRESENTATIVE, PRIOR TO INSTALLATION. INSTALL PER DETAILS ON PLANTING DETAIL SHEET.
11. WHERE PROVIDED, AREA TAKE-OFFS AND PLANT QUANTITY ESTIMATES IN PLANT LIST ARE FOR INFORMATION ONLY. CONTRACTOR IS RESPONSIBLE TO DO THEIR OWN QUANTITY TAKE-OFFS FOR ALL PLOT MATERIALS AND SIZES SHOWN ON PLANS. IN CASE OF DISCREPANCIES, PLAN TAKES PRECEDENCE OVER ALL CALL-OUTS AND/OR PLANT LIST.
12. WOOD CHIP MULCH INSTALLED IN TREE SAUCERS LOCATED WITHIN GRASS AREAS ONLY. DECORATIVE MULCH INSTALLED IN ALL PLANT BEDS.
13. NATIVE SEEDING, LAWN SEEDING, AND SOD AREAS SHALL RECEIVE SOIL CONDITIONING.

LANDSCAPE PLANS - PAY ITEMS

ITEM #	DESCRIPTION	UNIT	PROJECT QUANTITY
201-00000	CLEARING AND GRUBBING	LS	1
207-00205	TOPSOIL	CY	197
210-00001	RESET STRUCTURE	EA	1
212-00006	SEEDING (NATIVE)	AC	0.46
212-00011	SEEDING (LAWN)	AC	1.14
212-00032	SOIL CONDITIONING	AC	1.81
212-00048	SOIL PREPARATION (SPECIAL)	CY	64
212-00050	SOD	SF	8,700
212-00100	TREE RETENTION AND PROTECTION	LS	1
213-00002	MULCHING (WEED FREE HAY)	AC	1.59
213-00005	MULCHING (DECORATIVE) (1 ½")(4" DEPTH)	CF	5,333
213-00008	MULCHING (WOOD CHIP)(4" DEPTH)(TREE RINGS)	CF	195
213-00061	MULCH TACKIFIER	LB	318
213-00462	METAL LANDSCAPE BORDER (3/16 x 5-1/2")	LF	970
214-00005	LANDSCAPE MAINTENANCE (24-MONTH)	EA	1
214-00220	DECIDUOUS TREE (2" CAL)	EA	11
214-00350	DECIDUOUS SHRUB (5 GAL)	EA	232
214-00506	EVERGREEN TREE (6') (BALL AND BURLAP)	EA	36
214-00650	EVERGREEN SHRUB (5 GAL)	EA	51
214-00910	PERENNIALS (1 GAL)	EA	1,425
217-00000	HERBICIDE TREATMENT	SY	7,800

LANDSCAPE PLANS - PLANT MATERIAL LEGEND

DECIDUOUS TREES

QUANTITY	SYMBOL	COMMON NAME	BOTANICAL NAME	SIZE	WATER USE	SPACING	HEIGHT
10	SH	HONEYLOCUST SHADEMASTER	GLEDITSIA TRIACANTHOS INERMIS SHADEMASTER	2"	LOW	PER PLAN	40'-50'
1	HWM	HOT WINGS MAPLE	ACER TATARTICUM HOT WINGS	2"	LOW	PER PLAN	15'-20'
11							

EVERGREEN TREES

QUANTITY	SYMBOL	COMMON NAME	BOTANICAL NAME	SIZE	WATER USE	SPACING	HEIGHT
6	AP	AUSTRIAN PINE	PINUS NIGRA	6'	LOW	PER PLAN	40'-60'
1	CBS	COLORADO BLUE SPRUCE	PICEA PUNGENS	6'	MEDIUM	PER PLAN	40'-60'
12	BBS	BABY BLUE EYES SPRUCE	PICEA PUNGENS 'BABY BLUE EYES'	6'	MEDIUM	PER PLAN	20'-30'
13	BP	BOSNIAN PINE	PINUS HELDREICHI	6'	LOW	PER PLAN	10'12'
4	PP	PINON PINE	PINUS EDULIS	6'	LOW	PER PLAN	10'-20'
36							

DECIDUOUS SHRUBS

QUANTITY	SYMBOL	COMMON NAME	BOTANICAL NAME	SIZE	WATER USE	SPACING	HEIGHT
36	TLS	THREE LEAF SUMAC	RHUS TRILOBATA	5 GAL	LOW	6'	3'-6'
155	RS	RUSSIAN SAGE	PEROVSIA ATRIPLICFOLIA	5 GAL	LOW	4'	3'-4'
41	NC	NATIVE CHOKECHERRY	PRUNUS VIRGINIANA MELANOCARPA	5 GAL	LOW	10'	8'
232							

EVERGREEN SHRUBS

QUANTITY	SYMBOL	COMMON NAME	BOTANICAL NAME	SIZE	WATER USE	SPACING	HEIGHT
51	AJ	ARCADIA JUNIPER	JUNIPERUS HORIZONTALIS 'ARCADIA'	5 GAL	LOW	6'	1'
51							

PERENNIALS / GRASSES

QUANTITY	SYMBOL	COMMON NAME	BOTANICAL NAME	SIZE	WATER USE	SPACING	HEIGHT
112	FRG	FEATHER REED GRASS	CALAMAGROSTIS ACUTIFLORA 'KARL FOERSTER'	1 GAL	LOW	3'	3'-4'
87	BA	BLONDE AMBITION GRASS	BOUTELOUA GRACILIS 'BLONDE AMBITION'	1 GAL	VERY LOW	3'	2'-3'
6	MG	MAIDEN GRASS	MISCANTHUS SINENSIS 'GRACILLIMUS'	1 GAL	MEDIUM	AS SHOWN	4'-5'
222	BFG	BOULDER BLUE FESCUE	FESTUCA GLAUCA 'BOULDER BLUE'	1 GAL	LOW	1'	1'
330	CON	PURPLE CONEFLOWER	ECHINACEA PURPEA	1 GAL	LOW	1.5'	2'
107	DAY	DWARF GOLD DAYLILY	HEMEROCALLIS 'STELLA DE ORO'	1 GAL	LOW	1.5'	1.5'
160	DIA	FIRST LOVE PINK	DIANTHUS 'FIRST LOVE'	1 GAL	LOW	1.5'	1'
401	BES	BLACK-EYED SUSAN	RUDBECKIA FULGIDA 'GOLDSTURM'	1 GAL	LOW	1.5'	1.5'
1425							

LAWN SEEDING
SUPERIOR BLUEGRASS SEED MIX

PROPORTION BY WEIGHT	COMMON NAME	BOTANICAL NAME	MIN. % GERM.	MIN. % PURE SEED	MIN. % WEED SEED	PLS PER ACRE
50%	KENTUCKY BLUEGRASS	POA PRATENSIS	80	85	.50	22.5
30%	CHEWING RED FESCUE	FESTUCA RUBRA VAR.	85	98	.50	13.5
10%	PERENNIAL RYEGRASS	LOLIUM PERENNE	90	98	.50	4.5
10%	REDTOP	ARGOSTIS ALBA	85	92	1.00	4.5
					TOTAL:	45

NOTE: SOD BLEND SHALL MATCH LAWN SEEDING MIX

NATIVE SEEDING
NON-IRRIGATED NATIVE GRASS MIX

PROPORTION BY WEIGHT	COMMON NAME	BOTANICAL NAME	PLS PER ACRE
28%	WESTERN WHEATGRASS	ARGOPYRON SMITHII VAR. ARRIBA	6.2 LBS
28%	BIG BLUSTEM	ANDROPOGON GERARDII VAR. PAWNEE	6.2 LBS
10%	SIDE-OATS GRAMA	BOUTELOUA CURTIPENDULA VAR. EL RENO	2.2 LBS
6%	BLUE GRAMA	BOUTELOUA GRACILIS VAR. LOVINGTON	1.2 LBS
10%	SWITCHGRASS	PANICUM VIRGATUM VAR. PATHFINDER	2.2 LBS
10%	INDIANGRASS	SORGHASTRUM NUTANS VAR. CHEYENNE	2.2 LBS
8%	LITTLE BLUESTEM	SCHIZACHYRIUM SCOPARIUS VAR. CIMARON	1.8 LBS
		TOTAL:	22 LBS

Know what's below. Call before you dig.

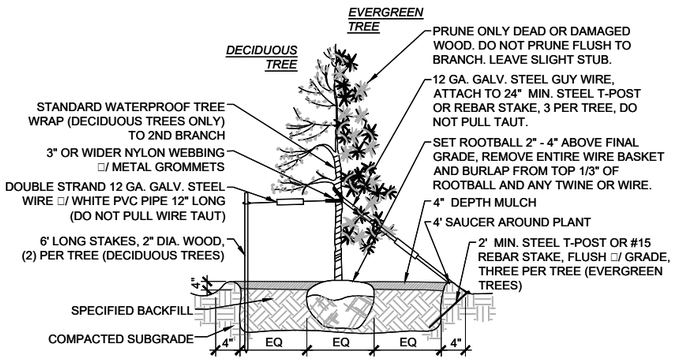

1 TREE PLANTING DETAIL

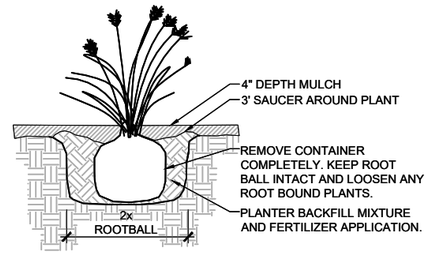

2 PERENNIAL PLANTING DETAIL

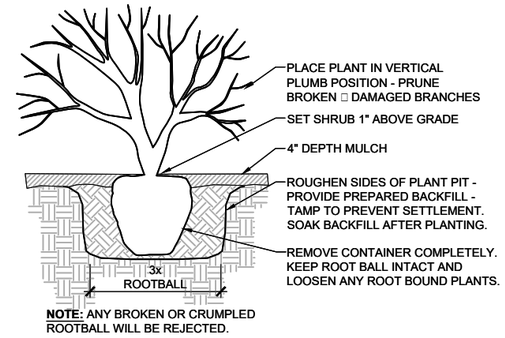

3 SHRUB PLANTING DETAIL

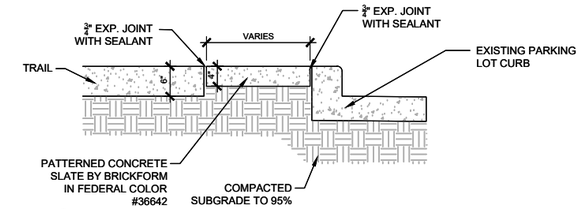

4 PATTERNED CONCRETE DETAIL

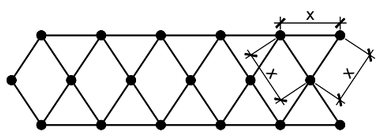

NOTES:
1. FOR DIMENSIONS OF 'X', SEE PLANT SCHEDULE.

2. ALL SHRUB AND PERENNIAL PLANTINGS SHALL BE SPACED TRIANGULARLY AT THE DIMENSIONS INDICATED ON THE PLANT SCHEDULE.

3. SPACE TREES PER PLAN.

5 PLANT SPACING DETAIL

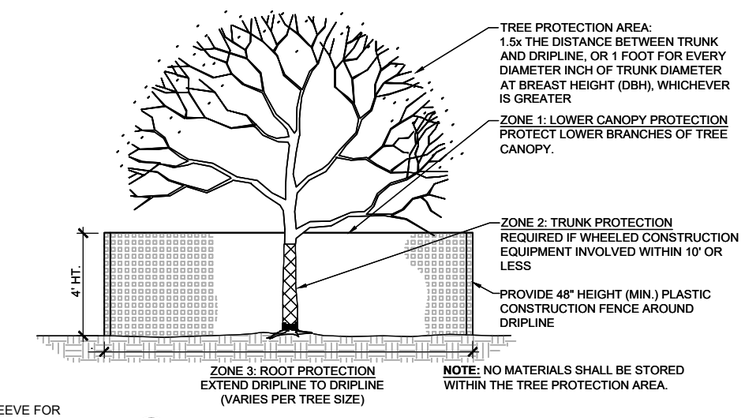

6 TREE PROTECTION DETAIL

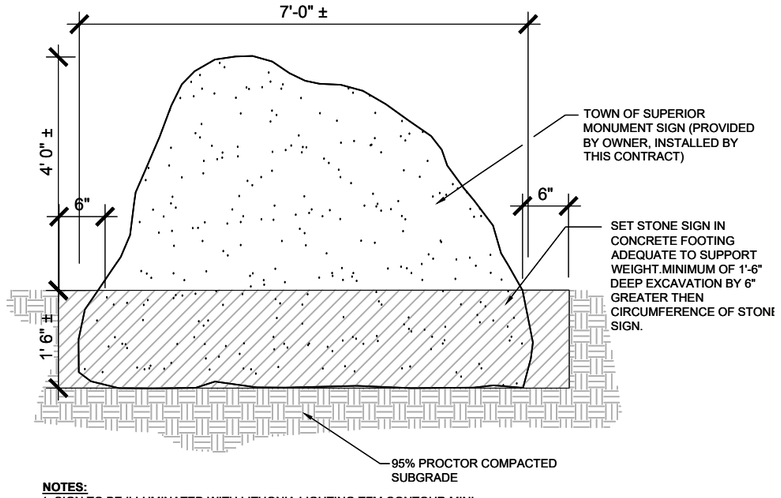

NOTES:
1. SIGN TO BE ILLUMINATED WITH LITHONIA LIGHTING TFM CONTOUR MINI UPLIGHTS OR APPROVED EQUAL. POWER SOURCE AT PANEL SHOWN ON PLAN.

2. INSURE SIGN IS SET PLUMB.

7 MONUMENT SIGN DETAIL

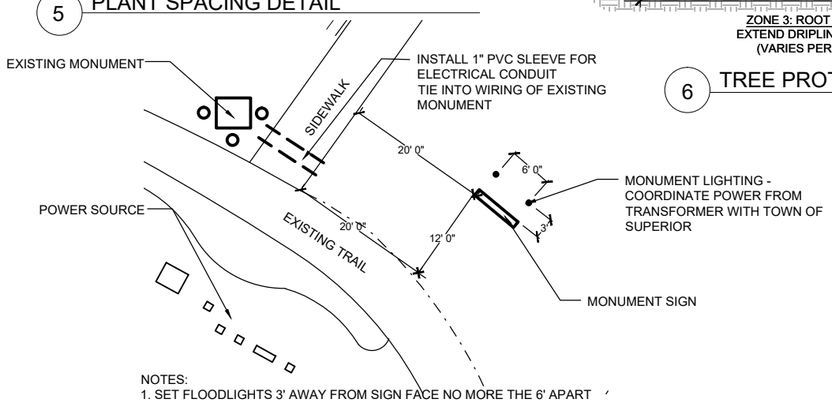

NOTES:
1. SET FLOODLIGHTS 3' AWAY FROM SIGN FACE NO MORE THE 6' APART

2. AIM LIGHTS 2/3 UP THE SIGN FACE

8 MONUMENT AND LIGHTING PLACEMENT DETAIL

Print Date: June 3, 2016	Sheet Revisions		
File Name: PKM_LANDSCAPE_MCCASLIN05.12.16.DWG	Date:	Comments	Init.
Horiz. Scale: Vert. Scale: As Noted	R-X		

FELSBURG HOLT & ULLEVIG
6300 South Syracuse Way
Suite 600
Centennial, CO 80111
(303) 721-1440

Town of Superior — Gateway to Boulder Valley
CDOT Region 4
10601 W. 10th Street
Greeley, CO 80634

LHN

As Constructed	SUPERIOR TRAIL CONNECTION LANDSCAPE DETAILS		Project No./Code
No Revisions:			TAP M258-003
Revised:	Designer: PRH	Structure Numbers	20671
Void:	Detailer: PRH		Sheet Number 39
	Sheet Subset: LANDSCAPE	Subset Sheets: LN2 of 2	

$PLOT_INFO$

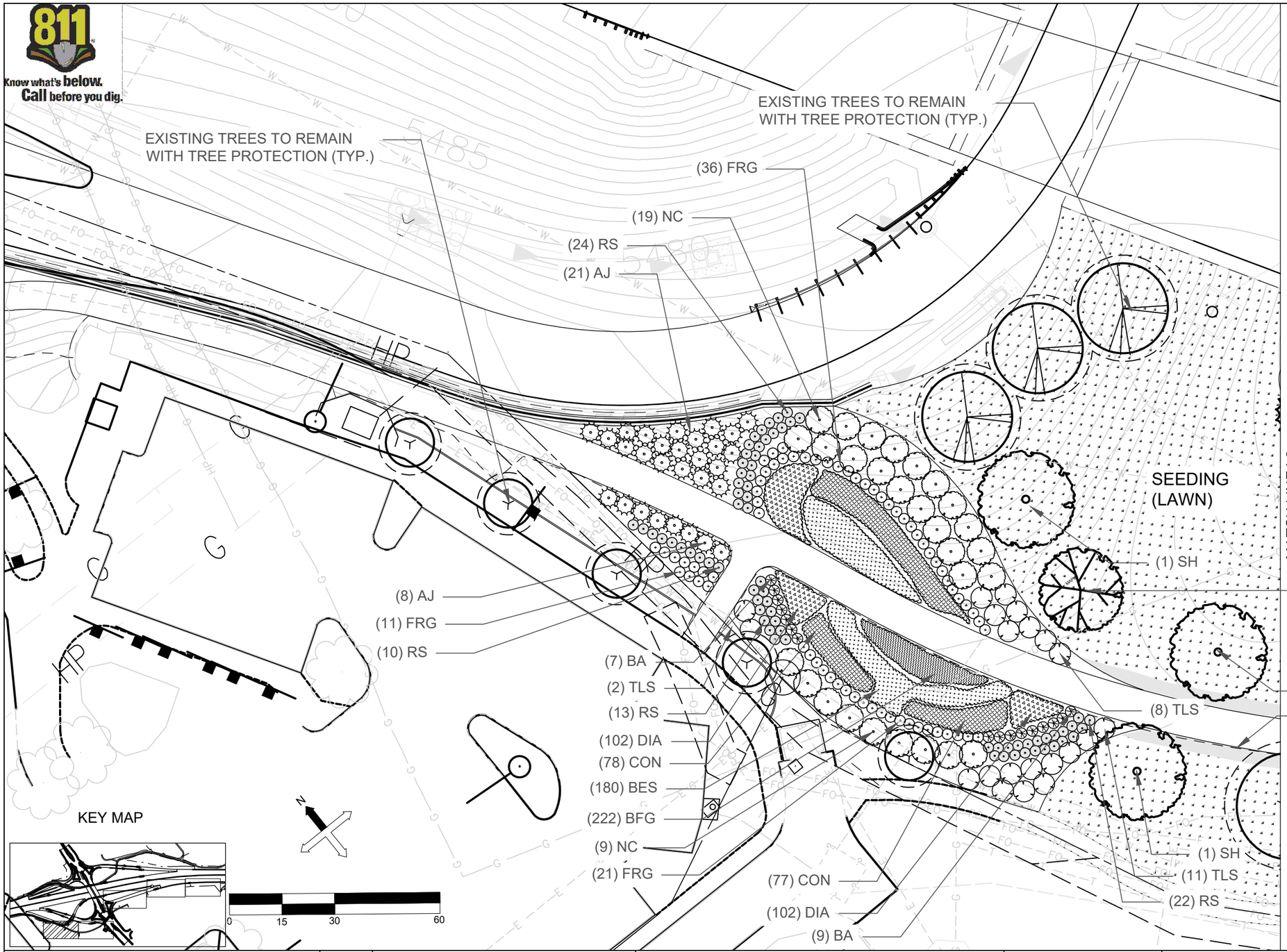

Print Date: June 3, 2016	Sheet Revisions			As Constructed	SUPERIOR TRAIL CONNECTION	Project No./Code
File Name: PKM_LANDSCAPE_MCCASLIN05.12.16.DWG	Date:	Comments	Init.	No Revisions:	LANDSCAPE PLANS	TAP M258–003
Horiz. Scale: Vert. Scale: As Noted				Revised:	Designer: PRH / Structure Numbers	20671
FELSBURG HOLT & ULLEVIG 6300 South Syracuse Way Suite 600 Centennial, CO 80111 (303) 721-1440				Void:	Detailer: PRH	
					Sheet Subset: LANDSCAPE / Subset Sheets: L1 of 5	Sheet Number 40

Town of Superior — Gateway to Boulder Valley®

CDOT Region 4
10601 W. 10th Street
Greeley, CO 80634

LHN

$PLOT_INFO$

Know what's below. Call before you dig.

KEY MAP

EXISTING TREES TO REMAIN WITH TREE PROTECTION (TYP.)

(3) TLS

(11) AJ

(1) SH

(71) BA

(64) RS

EXISTING BED TO REMAIN

(107) DAY

(101) BES

(3) FRG

(11) AJ

(22) RS

(4) BBS

(9) TLS

(31) FRG

(2) AP

(1) CBS

(4) SH

SEEDING (LAWN)

4' SOD STRIP ALONG TRAIL

MATCH LINE L1

EXISTING SIGN TO BE RELOCATED

(10) FRG

(3) TLS

EXISTING MONUMENT TO REMAIN

SEEDING (LAWN)

4' SOD STRIP ALONG TRAIL

EXISTING TREES TO REMAIN WITH TREE PROTECTION (TYP.)

N

0 15 30 60

Print Date: June 3, 2016	Sheet Revisions	As Constructed	SUPERIOR TRAIL CONNECTION LANDSCAPE PLANS
File Name: PKM_LANDSCAPE_MCCASLIN05.12.16.DWG	Date: / Comments / Init.	No Revisions:	Project No./Code: TAP M258-003
Horiz. Scale: / Vert. Scale: As Noted	R-X	Revised:	Designer: PRH / Structure Numbers: 20671
FELSBURG HOLT & ULLEVIG, 6300 South Syracuse Way, Suite 600, Centennial, CO 80111, (303) 721-1440		Void:	Detailer: PRH / Sheet Number: 41
	Town of Superior, Gateway to Boulder Valley; CDOT Region 4, 10601 W. 10th Street, Greeley, CO 80634		Sheet Subset: LANDSCAPE / Subset Sheets: L2 of 5

LHN

$PLOT_INFO$

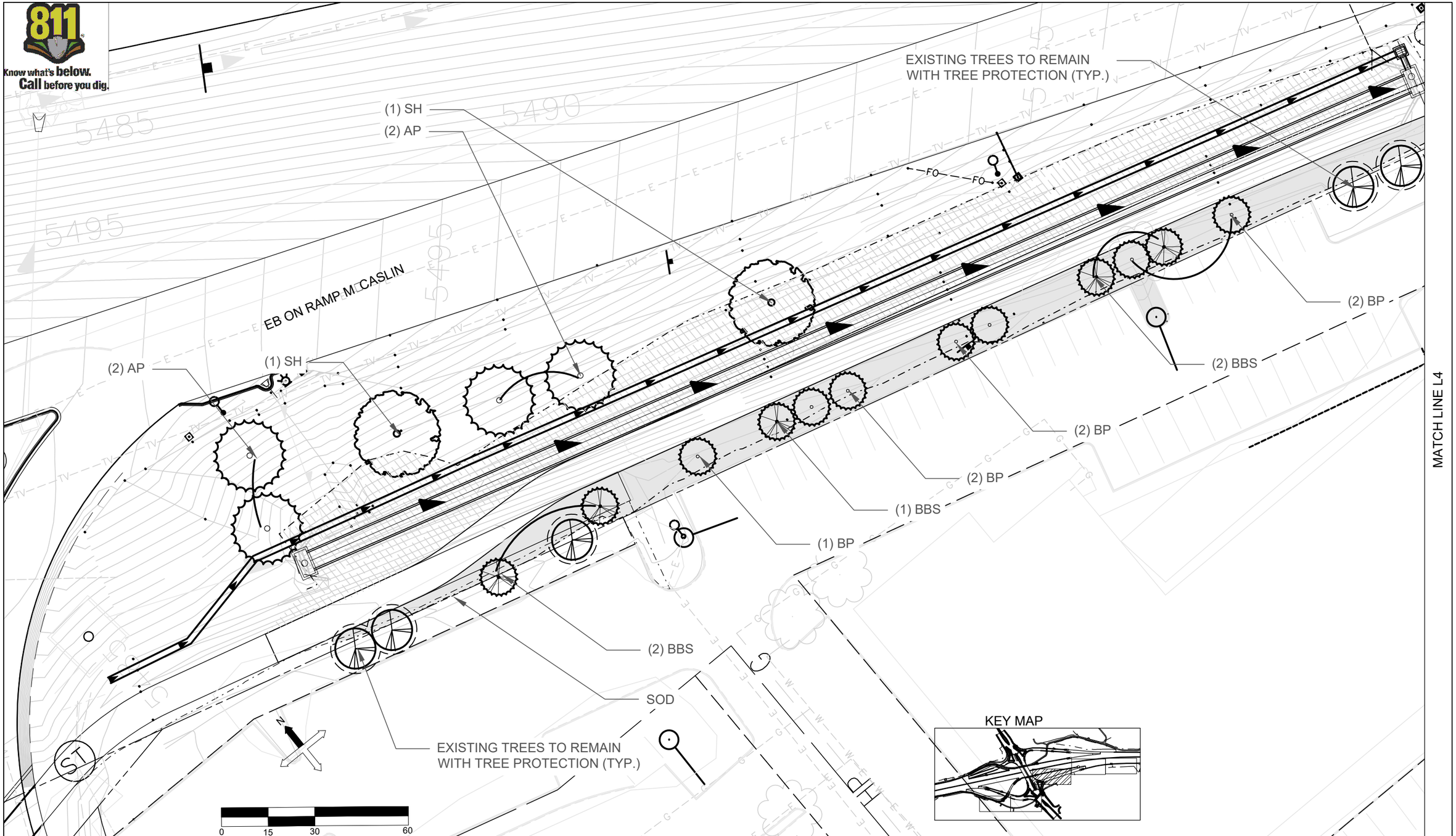

Print Date: June 3, 2016	Sheet Revisions		
File Name: PKM_LANDSCAPE_MCCASLIN05.12.16.DWG	Date:	Comments	Init.
Horiz. Scale: Vert. Scale: As Noted			
FELSBURG HOLT & ULLEVIG 6300 South Syracuse Way Suite 600 Centennial, CO 80111 (303) 721-1440			

R-X

Town of Superior — Gateway to Boulder Valley®

Region 4
10601 W. 10th Street
Greeley, CO 80634

LHN

As Constructed
No Revisions:
Revised:
Void:

SUPERIOR TRAIL CONNECTION
LANDSCAPE PLANS

Designer: PRH
Detailer: PRH
Structure Numbers
Sheet Subset: LANDSCAPE
Subset Sheets: L3 of 5

Project No./Code
TAP M258-003
20671
Sheet Number 42

$PLOT_INFO$

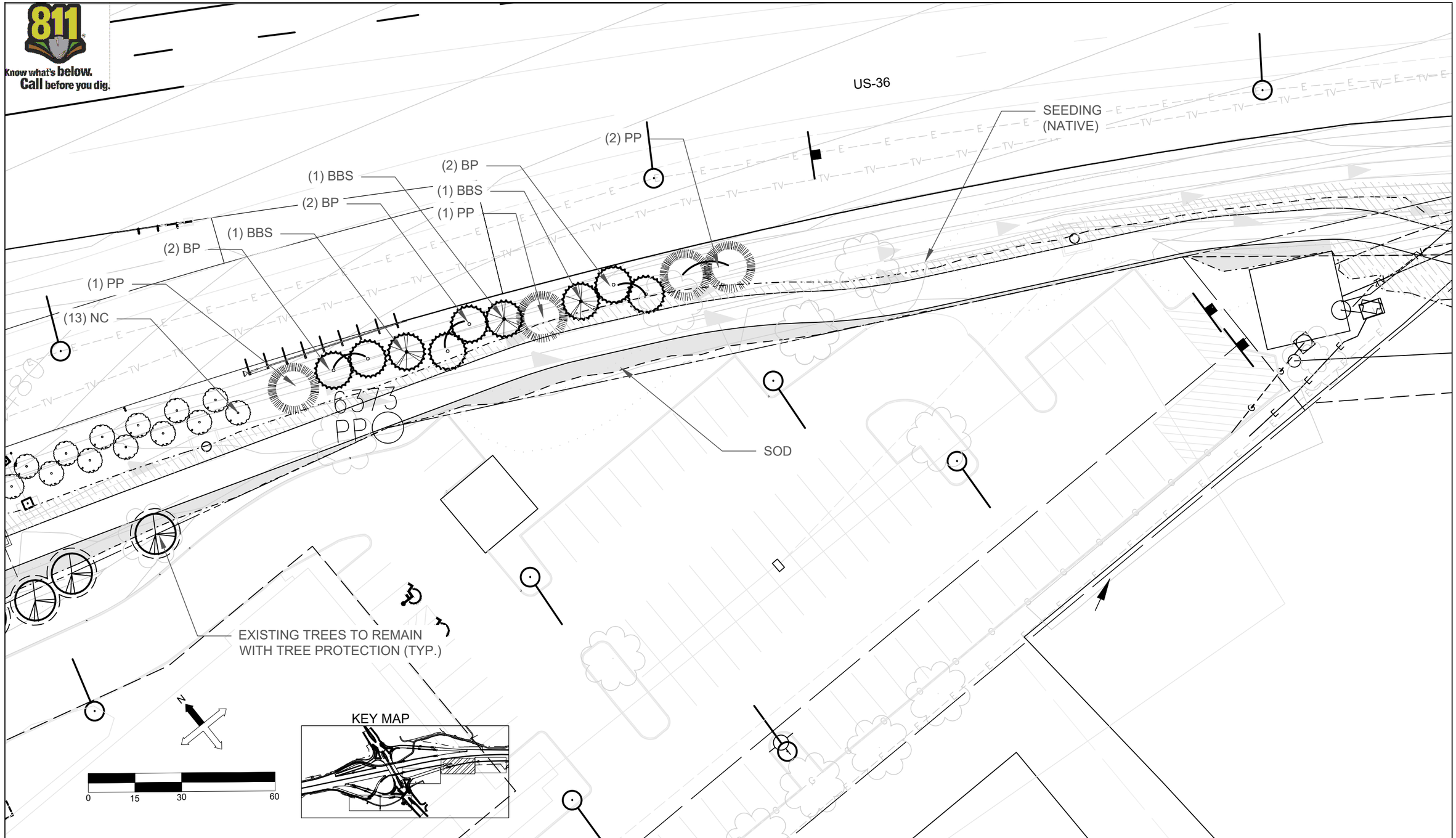

Print Date: June 3, 2016	Sheet Revisions		
File Name: PKM_LANDSCAPE_MCCASLIN05.12.16.DWG	Date:	Comments	Init.
Horiz. Scale: Vert. Scale: As Noted			
FELSBURG HOLT & ULLEVIG 6300 South Syracuse Way Suite 600 Centennial, CO 80111 (303) 721-1440			

R-X

Town of Superior — Gateway to Boulder Valley

CDOT Region 4
10601 W. 10th Street
Greeley, CO 80634

LHN

As Constructed	SUPERIOR TRAIL CONNECTION LANDSCAPE PLANS		Project No./Code
No Revisions:			TAP M258-003
Revised:	Designer: PRH	Structure Numbers	20671
Void:	Detailer: PRH		
	Sheet Subset: LANDSCAPE	Subset Sheets: L4 of 5	Sheet Number 43

$PLOT_INFO$

MATCH LINE L4

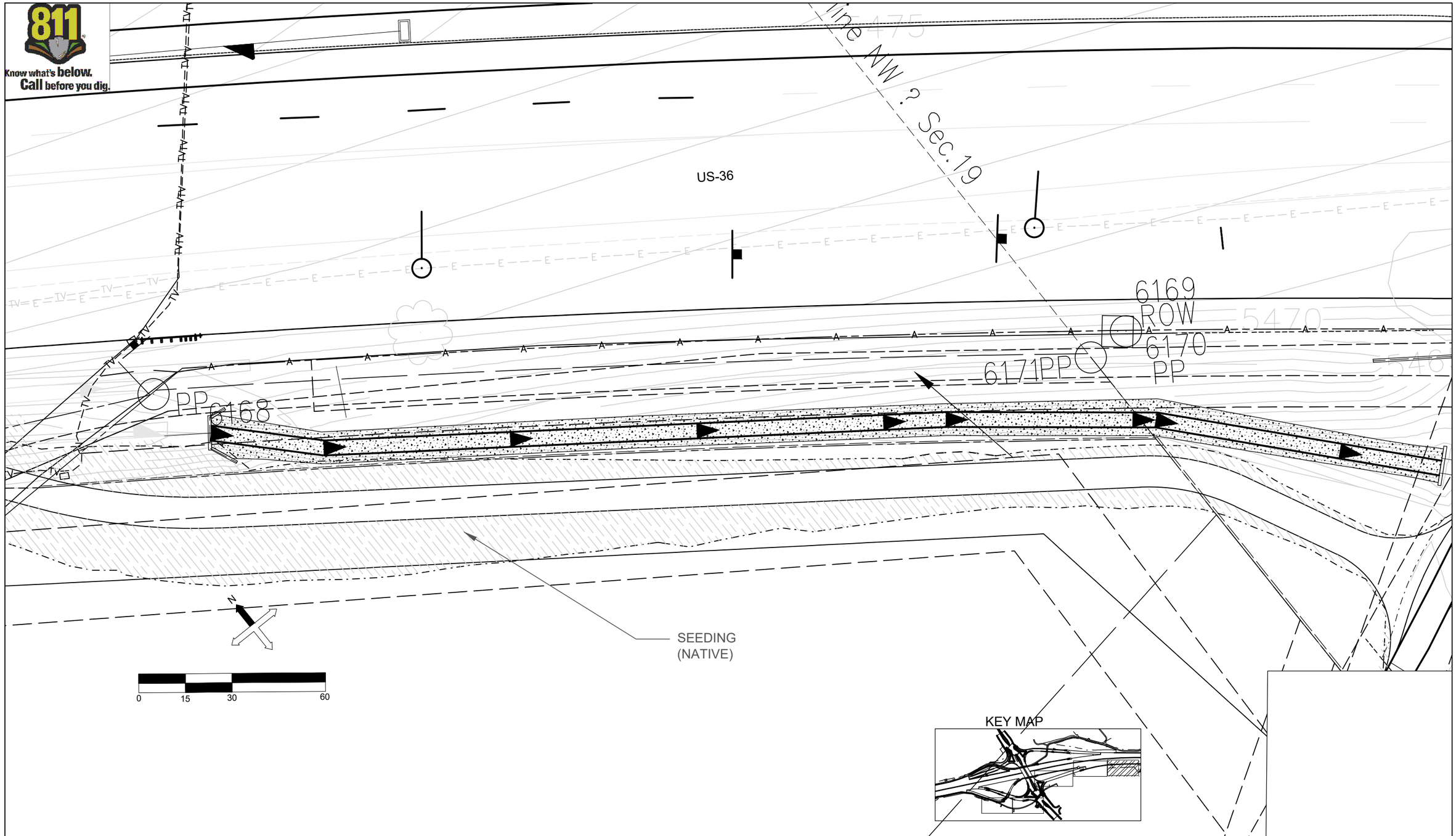

Print Date: June 3, 2016		Sheet Revisions			
File Name: PKM_LANDSCAPE_MCCASLIN05.12.16.DWG		Date:	Comments	Init.	
Horiz. Scale: Vert. Scale: As Noted	R-X				
FELSBURG HOLT & ULLEVIG 6300 South Syracuse Way Suite 600 Centennial, CO 80111 (303) 721-1440					

Town of Superior — Gateway to Boulder Valley®

CDOT Region 4
10601 W. 10th Street
Greeley, CO 80634

LHN

As Constructed	SUPERIOR TRAIL CONNECTION LANDSCAPE PLANS		Project No./Code
No Revisions:			TAP M258-003
Revised:	Designer: PRH	Structure Numbers	20671
Void:	Detailer: PRH		
	Sheet Subset: LANDSCAPE	Subset Sheets: L5 of 5	Sheet Number 44

$PLOT_INFO$

Know what's below. Call before you dig.

IRRIGATION NOTES

1. CONTRACTOR SHALL FIELD FIT, REPAIR / REPLACE EXISTING IRRIGATION IN KIND AS NEEDED TO RESTORE SYSTEM TO PROPER WORKING CONDITION AND WITH UNIFORM COVERAGE.

2. IRRIGATION SYSTEM DESIGNED FOR 50 PSI DYNAMIC PRESSURE. CONTRACTOR TO STATIC PRESSURE PRIOR TO INSTALLATION. STATIC PRESSURE MUST BE MINIMUM 75 PSI.

3. HUNTER I-20 NOZZLES SHALL BE INSTALLED PER THE FOLLOWING GUIDELINES:
   90 DEG ARC - 2.0 STANDARD BLUE NOZZLE
   120 DEG ARC - 3.0 STANDARD BLUE NOZZLE
   180 DEG ARC - 4.0 STANDARD BLUE NOZZLE

4. ALL SLEEVE PIPE OPENINGS SHALL BE DOUBLE WRAPPED WITH 6 MIL POLYETHYLENE PLASTIC AND SECURED USING WIRE "ZIP" TIES AROUND SLEEVE AND PIPE.

5. MINIMUM PIPE SIZE SHALL BE 1" DIAMETER UNLESS OTHERWISE NOTED ON PLAN.

6. PIPE HOPS FOR 1" CL 200 PVC DRIP LINE HEADER NOT SHOWN ON PLANS FOR CLARITY PURPOSED. UNDER NO CIRCUMSTANCES SHALL DRIP HEADER LINE BE CONNECTED TO LATERALS LINES OR MAINLINE.

7. CONTRACTOR SHALL PROVIDE 120 VOLT 15 AMP ELECTRICAL SERVICE TO CONTROLLER LOCATIONS.

8. 24 VOLT VALVE STATION WIRE 500LF OR LESS SHALL BE 14 AWG SINGLE STRAND COPPER WITH PVC OR PE JACKET. ALL 24 VOLT VALVE STATION WIRE 500LF OR GREATER SHALL BE 12 AWG SINGLE STRAND COPPER WITH PVC OR PE JACKET. ALL 24 VOLT COMMON WIRE SHALL BE 12 AWG SINGLE STRAND COPPER WITH PVC OR PE JACKET.

9. DRIP EMITTERS SHALL BE PRESSURE COMPENSATING TYPE. DRIP EMITTER LOCATIONS ARE NOT SHOWN ON PLAN FOR GRAPHICAL PURPOSES. EMITTERS SHALL BE PLACED AT ROOT BALL EDGE AND SPACED EQUIDISTANTLY. EMITTERS SHALL BE INSTALLED PER THE FOLLOWING QUANTITIES:
   #2 CONTAINER □ TWO 1.0 GPH EMITTER
   #5 CONTAINER □ THREE 1.0 GPH EMITTERS
   2" CALIPER TREE □ LARGER □ DUAL LOOP DRIP LINE, 0.6 GPH □ 24" SPACING, 32" INNER LOOP (4 EMITTERS) AND 60" OUTER LOOP (8 EMITTERS)

10. IRRIGATION DESIGN BASED ON PERFORMANCE CRITERIA OF PRODUCTS SPECIFIED. SUBSTITUTIONS MAY BE SUBMITTED FOR REVIEW AND APPROVAL BY THE TOWN OF SUPERIOR

GENERAL NOTES

1. THIS SYSTEM USES NON-POTABLE WATER (WEST OF MCCASLIN BLVD PROVIDED BY THE TOWN OF SUPERIOR AND POTABLE WATER FOR THE SUPERIOR PLAZA EAST OF MCCASLIN BLVD. ALL IRRIGATION COMPONENTS AND INSTALLATION PRACTICES SHALL COMPLY WITH THE TOWN OF SUPERIOR REGULATIONS.

2. ALLNON-POTABLE IRRIGATION COMPONENTS SHALL INCLUDE PURPLE IDENTIFICATION MARKINGS TO INDICATE NON-POTABLE WATER USE. THIS INCLUDES PURPLE PIPE AND/OR WARNING TAPE SECURED TO ALL PIPE, SPRINKLER CAPS, VALVE BOX LIDS, AND CONTROL VALVE TAGS.

3. ALL IRRIGATION COMPONENTS USED FOR NON-POTABLE SYSTEMS SHALL INCLUDE LAVENDER MARKINGS WITH "DO NOT DRINK" LISTED PER INDUSTRY STANDARDS.

4. THE INTENT OF THESE PLANS IS TO PROVIDE ADEQUATE IRRIGATION FOR NEW PLANT MATERIAL INCLUDING NEW IRRIGATION COMPONENTS AS NECESSARY. THE EXISTING IRRIGATION SYSTEM SHOULD BE MAINTAINED IN ITS CURRENT CONDITION WHERE POSSIBLE AND UTILIZED FOR THE RENOVATED AREAS. THE CONTRACTOR SHALL REPLACE IN KIND ANY IRRIGATION SYSTEM COMPONENT THAT IS DISTURBED OR DAMAGED DURING CONSTRUCTION.

5. DRIP HEADER LINES SHOWN ON PLANS INDICATE PROXIMITY OF DRIP ZONES. ALL TREES AND SHRUBS IN NATIVE SEEDED AREAS SHALL HAVE DRIP RINGS FOR TREES (24" SPACING) AND 18"" GRID LAYOUTS OR INDIVIDUAL EMITTER LOCATIONS FOR ALL SHRUBS. EMITTER LOCATIONS AND DISTRIBUTION TUBING NOT SHOWN ON PLANS FOR GRAPHICAL AND CLARITY PURPOSES. ZONES ARE DESIGNED TO ACCOMMODATE 5 GPM NOT TO EXCEED 10 GPM.

6. ALL PIPING AND VALVE ASSEMBLIES SHALL BE LOCATED IN NATIVE OR SHRUB BED AREAS WHERE POSSIBLE. LOCATIONS SHOWN ARE DIAGRAMMATIC AND ARE FOR CLARITY PURPOSES ONLY.

7. ANY QUANTITIES SHOWN ON PLAN ARE ESTIMATED QUANTITIES ONLY. FIELD CONDITIONS MAY VARY AND MAY ALTER ACTUAL QUANTITIES. CONTRACTOR TO VERIFY FIELD CONDITIONS PRIOR TO INSTALLATION.

8. ALL SPRINKLER NOZZLES SHALL BE ADJUSTED FOR OPTIMUM COVERAGE AND MINIMUM OVERSPRAY.

9. REMOTE CONTROL VALVES SHALL BE INSTALLED PER DETAILED DRAWINGS AND SHALL HAVE ONE CONTROL VALVE PER VALVE BOX.

10. ALL ELECTRICAL WORK SHALL BE IN COMPLIANCE WITH N.E.C. AND ALL LOCAL CODES.

11. CONTRACTOR SHALL BE RESPONSIBLE FOR THE LOCATION OF ALL EXISTING UTILITIES PRIOR TO ANY EXCAVATION.

12. ALL TRENCHES SHALL BE BACKFILLED IN 6" LIFTS OF CLEAN SOIL FREE OF ROCKS AND RUBBISH AND COMPACTED TO 95% PROCTOR DENSITY. CONTRACTOR SHALL BE RESPONSIBLE FOR THE LOCATION OF ALL EXISTING UTILITIES PRIOR TO ANY EXCAVATION.

13. CARE SHALL BE TAKEN TO ENSURE THAT NO SOIL OR DEBRIS ENTERS THE PIPE DURING INSTALLATION.

14. ALL PIPE ENDS SHALL BE PROPERLY CLEANED AND SHALL BE FREE OF ANY BURRS AND/OR SHAVINGS AS A RESULT OF THE PIPE BEING CUT.

15. ALL LINES SHALL BE THOROUGHLY FLUSHED PRIOR TO INSTALLATION OF NOZZLES.

DOUGLAS J. SMITH
Certified Irrigation Designer
CID
IRRIGATION ASSOCIATION
42773

Print Date: June 6, 2016	Sheet Revisions			As Constructed	SUPERIOR TRAIL CONNECTION IRRIGATION NOTES	Project No./Code
File Name: PKM_IRRIGATION_MCCASLIN.DWG	Date:	Comments	Init.	No Revisions:		TAP M258-003
Horiz. Scale: Vert. Scale: As Noted	R-X			Revised:	Designer: / Detailer: / Structure Numbers	20671
FELSBURG HOLT & ULLEVIG, 6300 South Syracuse Way, Suite 600, Centennial, CO 80111, (303) 721-1440				Void:	Sheet Subset: IRRIGATION / Subset Sheets: IR1.1 of 10	Sheet Number 45

Town of Superior — CDOT — Region 4, 10601 W. 10th Street, Greeley, CO 80634 — LHN

$PLOT_INFO$

Know what's below. Call before you dig.

IRRIGATION QUANTITIES

Item No.	Description	Unit	Total
619-50080	1 Inch Plastic Pipe	LF	3580
619-50100	1-1/4 Inch Plastic Pipe	LF	140
619-50120	1-1/2 Inch Plastic Pipe	LF	40
619-50160	2 Inch Plastic Pipe	LF	100
619-50240	3 Inch Plastic Pipe	LF	280
619-50320	4 Inch Plastic Pipe	LF	1200
619-50480	6 Inch Plastic Pipe	LF	160
619-50480	6 Inch Plastic Pipe - Bored	LF	50
623-00162	Drip Emitter Tubing	LF	2500
623-00163	Multi-Outlet Drip Emitter (tree ring)	EACH	46
623-00168	1 Inch Emitter Valve Assembly	EACH	6
623-00184	1/2 Inch Flush Unit	EACH	11
623-00206	6 Inch Pop-Up Spray Sprinkler (w/ nozzle)	EACH	113
623-00332	4 Inch Pop-Up Rotary Sprinkler	EACH	37
623-03112	1-1/2 Inch Automatic Control Valve	EACH	5
623-04000	Control Wire 24 Volt	LF	2500
623-04008	1 Inch Quick-Coupler Valve	EACH	3
623-05032	4 Inch Gate Valve	EACH	1

NOTES:

1. IRRIGATION CONTROLLER (WEST OF MCCASLIN) IS EXISTING AND HAS BEEN RELOCATED AS PART OF US36 PH2 WORK. CONTROLLER FOR AREA EAST OF MCCASLIN BLVD IS EXISTING AND IS LOCATED ON EXTERIOR WALL BEHIND OLD CHICAGO.

2. THE IRRIGATION WEST OF MCCASLIN BLVD IS SYSTEM IS INTENDED TO UTILIZE A NON-POTABLE WATER SOURCE. THE IRRIGATION SYSTEM FOR THE EAST IS INTENDED TO USE EXISTING POTABLE WATER SOURCE FROM THE EXISTING IRRIGATION SYSTEM.

DOUGLAS J. SMITH Certified Irrigation Designer CID IRRIGATION ASSOCIATION 42773

Know what's below. Call before you dig.

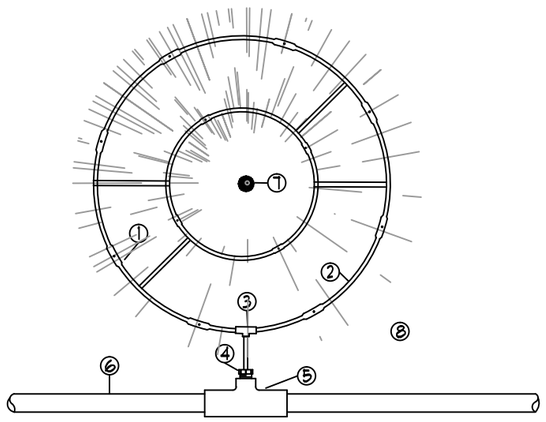

1. LANDSCAPE DRIPLINE - 30" DIAMETER RING
2. LANDSCAPE DRIPLINE EMITTER
3. COMPRESSION FITTING -TEE
4. 3/4" MIPT X INSERT MALE ADAPTER
5. SCH. 40 PVC 1" X 3/4" REDUCING TEE
6. LATERAL DRIP FEEDER LINE
7. CENTER OF TREE OR SHRUB
8. CANOPY EDGE OF TREE OR SHRUB

NOTE: DRIPLINE FITTINGS BRAND MUST MATCH DRIPLINE TYPE

1 TREE / SHRUB DRIP RING ASSEMBLY
PLAN VIEW NTS

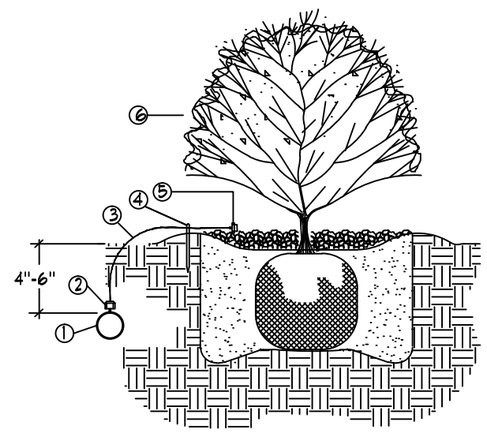

1. POLYETHYLENE DRIPLINE TUBING
2. DRIP EMITTER - SEE IRRIGATION LEGEND / NOTES
3. DISTRIBUTION TUBING
4. TUBING STAKE
5. BUG CAP - SEE IRRIGATION LEGEND / NOTES
6. TYPICAL PLANTING DETAIL - FOR REFERENCE ONLY. (SEE PLANTING PLANS)

2 TYPICAL DRIP EMITTER PLACEMENT
NTS

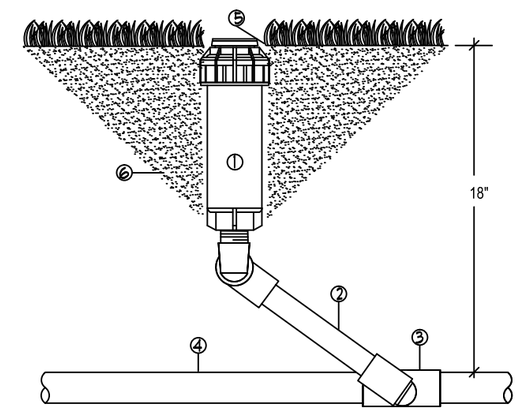

1. SPRINKLER HEAD (SEE LEGEND)
2. LASCO T712-212 UNITIZED O-RING SWING JOINT
3. LATERAL FITTING
4. LATERAL PIPE (SEE LEGEND)
5. FINISH GRADE
6. CLEAN COMPACTED BACKFILL

3 ROTARY SPRINKLER ASSEMBLY - 3/4" INLET
WITH UNITIZED SWING JOINT NTS

DOUGLAS J. SMITH
Certified Irrigation Designer
CID
IRRIGATION ASSOCIATION
42773

Print Date: June 6, 2016	Sheet Revisions		
File Name: PKM_IRRIGATION_MCCASLIN.DWG	Date:	Comments	Init.
Horiz. Scale: Vert. Scale: As Noted			

R-X

FELSBURG HOLT & ULLEVIG
6300 South Syracuse Way
Suite 600
Centennial, CO 80111
(303) 721-1440

Town of Superior

CDOT Region 4
10601 W. 10th Street
Greeley, CO 80634

LHN

As Constructed
No Revisions:
Revised:
Void:

SUPERIOR TRAIL CONNECTION
IRRIGATION DETAILS

Designer:
Detailer:
Structure Numbers
Sheet Subset: IRRIGATION
Subset Sheets: IR1.3 of 10

Project No./Code
TAP M258-003
20671
Sheet Number 47

$PLOT_INFO$

Know what's below. Call before you dig.

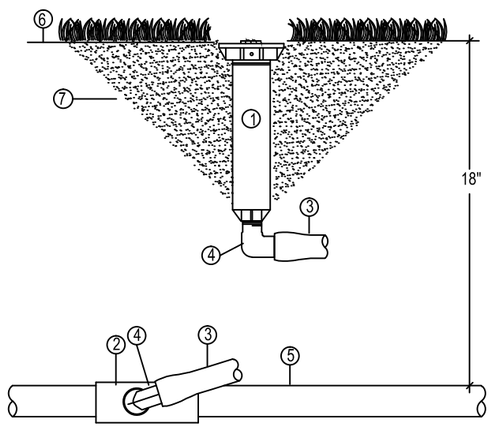

1. SPRINKLER HEAD (SEE LEGEND)
2. SCH 40 PVC LATERAL FITTING
3. SWING PIPE / FUNNY PIPE
4. MARLEX BARBED FITTING
5. PVC LATERAL PIPE (SEE LEGEND)
6. FINISH GRADE
7. CLEAN COMPACTED BACKFILL

4 FIXED SPRAY SPRINKLER ASSEMBLY

W/ SWING PIPE

NTS

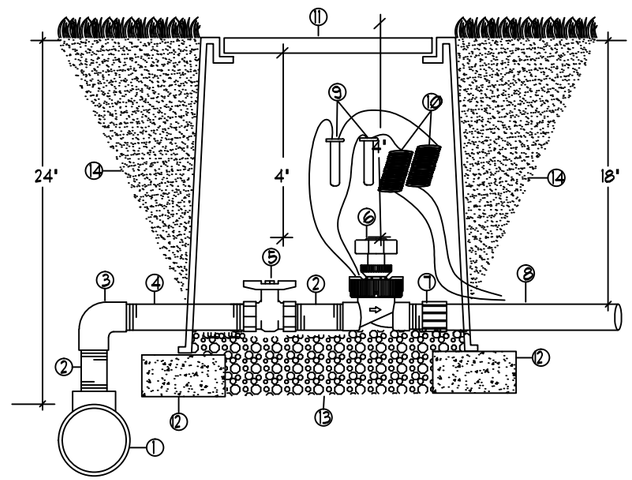

1. MAINLINE FITTING
2. SCH 80 PVC NIPPLE - TBE 4" LENGTH
3. SCH 80 PVC THREADED 90 DEG ELBOW
4. SCH 80 PVC NIPPLE - TBE 18" LENGTH
5. SCH 80 PVC THREADED BALL VALVE
6. REMOTE CONTROL VALVE (SEE LEGEND)
7. SCH 80 PVC MALE ADAPTER
8. LATERAL PIPING (SEE LEGEND)
9. 3M DBY WATERTIGHT CONNECTOR
10. 36" WIRE EXPANSION LOOPS
11. CARSON / BROOKS 1418 VALVE BOX
12. CMU SUPPORT BLOCK
13. 2 CUBIC FT WASHED PEA GRAVEL
14. CLEAN AND COMPACTED BACKFILL

5 REMOTE CONTROL VALVE ASSEMBLY

WITH BALL VALVE ISOLATION

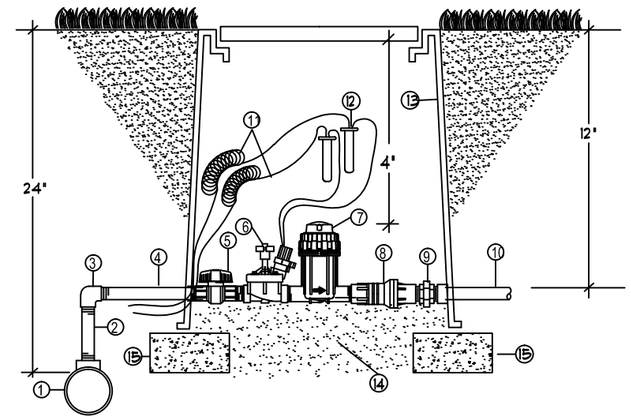

1. MAINLINE FITTING
2. SCH 80 PVC THREADED NIPPLE - 10" LENGTH
3. SCH 80 PVC THREADED ELBOW
4. SCH 80 PVC THREADED NIPPLE - 12" LENGTH
5. PVC BALL VALVE
6. REMOTE CONTROL VALVE (SEE LEGEND)
7. BASKET FILTER
8. PRESSURE REGULATOR
9. SCH. 80 PVC THREADED UNION
10. LATERAL PIPE (SEE LEGEND)
11. EXPANSION LOOPS - 36" MINIMUM
12. 3-M DBY CONNECTOR
13. CARSON 1419 VALVE BOX W/ LID (EXTENSIONS AS REQUIRED)
14. WASHED PEA GRAVEL - 2 CF MINIMUM
15. 4" X 8" X 16" CONCRETE BLOCK SUPPORT

6 REMOTE CONTROL DRIP VALVE ASSY.

W/ FILTER & REGULATOR

NTS

DOUGLAS J. SMITH
Certified Irrigation Designer
CID
IRRIGATION ASSOCIATION
42773

Print Date: June 6, 2016		Sheet Revisions			
File Name: PKM_IRRIGATION_MCCASLIN.DWG		Date:	Comments	Init.	
Horiz. Scale:	Vert. Scale: As Noted				
FELSBURG HOLT & ULLEVIG 6300 South Syracuse Way Suite 600 Centennial, CO 80111 (303) 721-1440	R-X				

Town of Superior

CDOT Region 4
10601 W. 10th Street
Greeley, CO 80634

LHN

As Constructed	SUPERIOR TRAIL CONNECTION IRRIGATION DETAILS		Project No./Code
No Revisions:			TAP M258-003
Revised:	Designer:	Structure Numbers	20671
	Detailer:		
Void:	Sheet Subset: IRRIGATION	Subset Sheets: IR1.4 of 10	Sheet Number 48

$PLOT_INFO$

Know what's below. Call before you dig.

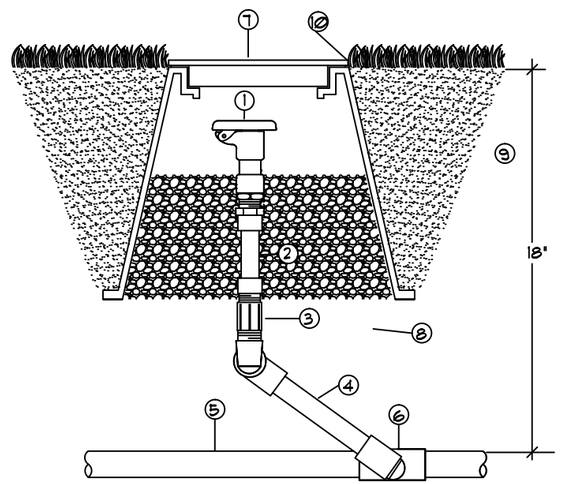

1. QUICK COUPLING VALVE(SEE LEGEND)
2. EXCALIBUR 1" X 6" FLEX NIPPLE
3. SCH 80 PVC THREADED COUPLING
4. LASCO G172-212 UNITIZED SWING JOINT
5. LATERAL PIPE (SEE LEGEND)
6. SCH 40 PVC LATERAL FITTING
7. CARSON 910 10" ROUND VALVE BOX
8. WASHED PEA GRAVEL - 1 CF MINIMUM
9. CLEAN COMPACTED BACKFILL
10. FINISH GRADE

7 QUICK COUPLING VALVE ASSEMBLY

1" INLET

NTS

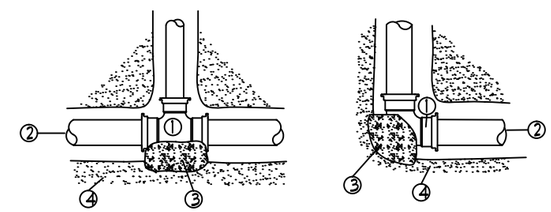

1. MAINLINE FITTING
2. MAINLINE PIPE
3. 3000 PSI CONCRETE THRUST BLOCK POURED IN PLACE
4. UNDISTURBED SOIL

NOTE: THRUST BLOCKS SHALL BE INSTALLED ON ALL GASKETED O-RING PIPE FITTINGS AND MAINLINE VALVES.

8 THRUST BLOCK DETAIL

NTS

DOUGLAS J. SMITH
Certified Irrigation Designer
CID
IRRIGATION ASSOCIATION
42773

Print Date: June 6, 2016		Sheet Revisions			As Constructed	SUPERIOR TRAIL CONNECTION IRRIGATION DETAILS	Project No./Code
File Name: PKM_IRRIGATION_MCCASLIN.DWG		Date:	Comments	Init.	No Revisions:		TAP M258-003
Horiz. Scale: Vert. Scale: As Noted	R-X				Revised:	Designer: / Structure Numbers	20671
FELSBURG HOLT & ULLEVIG 6300 South Syracuse Way Suite 600 Centennial, CO 80111 (303) 721-1440					Void:	Detailer: / Sheet Subset: IRRIGATION / Subset Sheets: IR1.5 of 10	Sheet Number 49

Town of Superior

CO CDOT Region 4 10601 W. 10th Street Greeley, CO 80634

LHN

$PLOT_INFO$

Know what's below. Call before you dig.

IRRIGATION LEGEND

Symbol	Description
	RAIN BIRD XFD-06-24 DRIP RING FOR 2 CALIPER PLANT MATERIAL (OR EQUIVALENT) - SEE DETAIL
1	MP ROTATOR MP1000 90-180 DEG (MAROON) NOZZLE WITH HUNTER PROS-06-PRS40-CV 6" POP UP SPRINKLER ASSEMBLY (OR EQUIVALENT) - SEE DETAIL
1	MP ROTATOR MP1000 180 DEG (MAROON) NOZZLE WITH HUNTER PROS-12-PRS40-CV 12" POP UP SPRINKLER ASSEMBLY (OR EQUIVALENT) - SEE DETAIL
2	MP ROTATOR MP2000 90-180 DEG (BLACK) NOZZLE WITH HUNTER PROS-12-PRS40-CV 12" POP UP SPRINKLER ASSEMBLY (OR EQUIVALENT) - SEE DETAIL
	HUNTER PGP-04-CV ULTRA 4" POP UP ROTARY SPRINKLER ASSEMBLY W/ STD 3.0 BLUE NOZZLE - 120 DEG ARC (OR EQUIVALENT) - SEE DETAIL
	HUNTER PGP-04-CV-ULTRA 4" POP UP ROTARY SPRINKLER ASSEMBLY W/ STD 4.0 BLUE NOZZLE - 180 DEG ARC (OR EQUIVALENT) - SEE DETAIL
	HUNTER PGP-04-CV-ULTRA 4" POP UP ROTARY SPRINKLER ASSEMBLY W/ STD 4.0 BLUE NOZZLE - 360 DEG ARC (OR EQUIVALENT) - SEE DETAIL
	RAIN BIRD 100-PESB 1" REMOTE CONTROL VALVE ASSEMBLY (OR EQUIVALENT) - SEE DETAIL
	RAIN BIRD 150-PESB 1-1/2" REMOTE CONTROL VALVE ASSEMBLY (OR EQUIVALENT) - SEE DETAIL
	RAIN BIRD XCZ-100PRB-COM 1" REMOTE CONTROL DRIP VALVE ASSEMBLY (OR EQUIVALENT) - SEE DETAIL
C	EXISTING/RELOCATED CONTROLLER FROM US36 PH2 WORK
	RAIN BIRD 5LRC 1" QUICK COUPLING VALVE ASSEMBLY (OR EQUIVALENT) - SEE DETAIL
	NIBCO P-619-RW 4" RESILIENT SEATED GATE VALVE ASSEMBLY (OR EQUIVALENT) - SEE DETAIL
F	MANUAL DRIP LINE FLUSH VALVE ASSEMBLY - SEE DETAIL
	1" DRIP FEEDER CL 200 PVC SOLVENT WELD PIPE
	1" CL200 PVC SOLVENT WELD LATERAL PIPE - 18" BURY
	1-1/4" CL200 PVC SOLVENT WELD LATERAL PIPE - 18" BURY
	1-1/2" CL200 PVC SOLVENT WELD LATERAL PIPE - 18" BURY
	2" CL200 PVC SOLVENT WELD MAINLINE PIPE - 24" BURY
	3" CL200 PVC RING TITE GASKETED MAINLINE PIPE
	4" CL200 PVC RING TITE GASKETED MAINLINE PIPE
	1" POLYETHYLENE DRIP TUBING
	3/4" POLYETHYLENE DRIP TREE RING DISTRIBUTION TUBING
	3" CL200 PVC LATERAL SLEEVE PIPE
	6" CL200 PVC SLEEVE PIPE WITH SEPARATE 4" CL200 PVC WIRE SLEEVE
	6" CL200 PVC SLEEVE PIPE WITH SEPARATE 4" CL200 PVC WIRE SLEEVE - BORED

DOUGLAS J. SMITH
Certified Irrigation Designer
CID
IRRIGATION ASSOCIATION
42773

Print Date: June 6, 2016
File Name: PKM_IRRIGATION_MCCASLIN.DWG
Horiz. Scale: Vert. Scale: As Noted

FELSBURG HOLT & ULLEVIG
6300 South Syracuse Way
Suite 600
Centennial, CO 80111
(303) 721-1440

R-X

Sheet Revisions

Date:	Comments	Init.

Town of Superior

CO CDOT
Region 4
10601 W. 10th Street
Greeley, CO 80634

LHN

As Constructed
No Revisions:
Revised:
Void:

SUPERIOR TRAIL CONNECTION
IRRIGATION LEGEND

Designer:
Detailer:
Structure Numbers
Sheet Subset: IRRIGATION
Subset Sheets: IR1.6 of 10

Project No./Code
TAP M258-003
20671
Sheet Number 50

$PLOT_INFO$

811 Know what's below. Call before you dig.

EB OFF RAMP AT MCCASLIN

1- 6" & 1-4" CL200 PVC SLEEVES

4"

1-14 | 1" | <10 | DRIP

APPROXIMATE LOCATION OF EXISTING TOWN OF SUPERIOR 4" NON-POTABLE MAINLINE TO REMAIN. REPLACE OR RESTORE TO ORIGINAL CONDITION IF DISTURBED OR DAMAGED BY CONSTRUCTION

EXISTING RTD 1-1/2" NON-POTABLE IRRIGATION MAINLINE TO BE RELOCATED IN LANDSCAPED AREA

EXISTING MAINLINE EXPOSED OR DAMAGED DURING CONSTRUCTION SHALL BE REMOVED AND DISCARDED AND REPLACED WITH NEW 4" CL200 PVC MAINLINE. (LOCATION APPROXIMATE)

1-13 | 1" | 11.6 | 0.38 IPH

1-12 | 1" | <10 | DRIP

3/4" POLYETHYLENE DISTRIBUTION LINE (TYP)

EB BRT RAMP

1" CL 200 PVC DRIP RING HEADER LINE (TYP)

2Ø NZL

4" 2Ø NZL 4"

0.6 GPH LANDSCAPE DRIP LINE RING (TYP)

NOTE: ALL OTHER EXISTING CONTROL VALVES NOT SHOWN ON PLAN AND NOT IMPACTED BY CONSTRUCTION ARE TO REMAIN IN PLACE. CONTRACTOR SHALL RESTORE ALL CONTROL WIRE(S) AS NECESSARY FOR PROPER OPERATION OF SYSTEM.

1- 2" CL200 PVC SLEEVE

2- 2" CL200 PVC SLEEVES

1- 2" CL200

0.6 GPH LANDSCAPE DRIP LINE RING (TYP)

DOUGLAS J. SMITH Certified Irrigation Designer CID IRRIGATION ASSOCIATION 42773

IRRIGATION SLEEVE PIPE KEY
MAINLINE 1- 6" CL200 PVC &
1 - 4" CL200 PVC WIRE SLEEVE
LATERAL 1 - 4" CL200 PVC SLEEVE
DRIP LATERAL 1 - 2" CL200 PVC SLEEVE

KEY MAP

0 15 30 60

Print Date: June 6, 2016	Sheet Revisions		
File Name: PKM_IRRIGATION_MCCASLIN.DWG	Date:	Comments	Init.
Horiz. Scale: Vert. Scale: As Noted			

FELSBURG HOLT & ULLEVIG
6300 South Syracuse Way
Suite 600
Centennial, CO 80111
(303) 721-1440

Town of Superior

CDOT CO Region 4
10601 W. 10th Street
Greeley, CO 80634

LHN

As Constructed
No Revisions:
Revised:
Void:

SUPERIOR TRAIL CONNECTION
IRRIGATION PLANS

Designer:
Detailer:
Structure Numbers
Sheet Subset: IRRIGATION
Subset Sheets: IR1.7 of 10

Project No./Code
TAP M258-003
20671
Sheet Number 51

$PLOT_INFO$

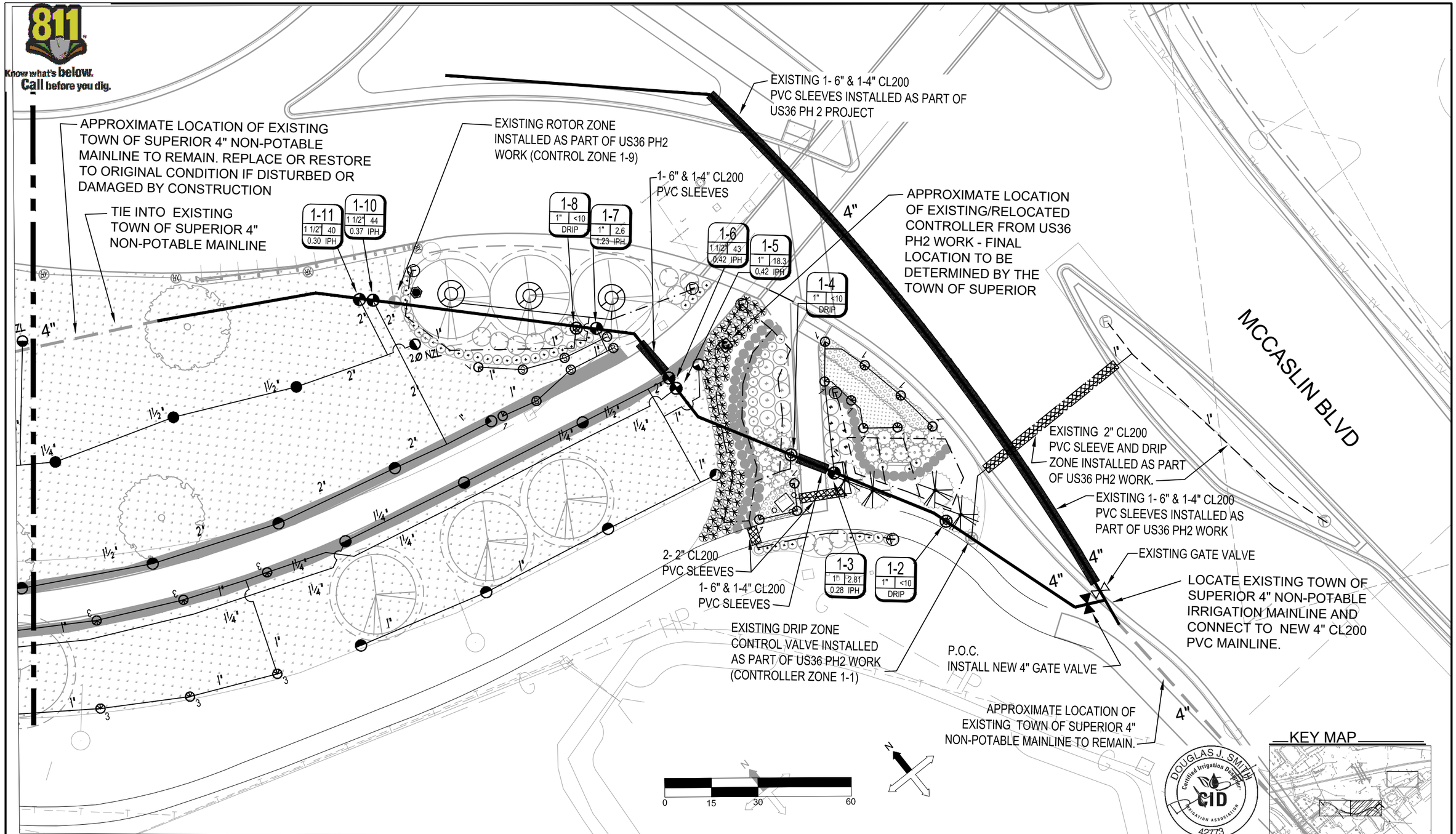

Print Date: June 6, 2016	Sheet Revisions	As Constructed	SUPERIOR TRAIL CONNECTION IRRIGATION PLANS
File Name: PKM_IRRIGATION_MCCASLIN.DWG	Date: / Comments / Init.	No Revisions:	Designer: / Detailer: / Structure Numbers
Horiz. Scale: / Vert. Scale: As Noted		Revised:	Sheet Subset: IRRIGATION / Subset Sheets: IR1.8 of 10
FELSBURG HOLT & ULLEVIG, 6300 South Syracuse Way, Suite 600, Centennial, CO 80111, (303) 721-1440		Void:	

Town of Superior — CDOT Region 4, 10601 W. 10th Street, Greeley, CO 80634 — LHN

Project No./Code
TAP M258-003
20671
Sheet Number 52

$PLOT_INFO$

Know what's below. Call before you dig.

EB ON RAMP AT MCCASLIN

CL 200 PVC DRIP RING HEADER LINE (TYP)

3/4" POLYETHYLENE DISTRIBUTION LINE (TYP)

1- 2" CL200 PVC SLEEVE

2-1	2-2	2-3
1" 9.26	1" 12.85	1" 5.5
0.28 IPH	0.28 IPH	DRIP

TIE INTO EXISTING 1" IRRIGATION MAINLINE AND INSTALL NEW CONTROL VALVES WIYHIN R.O.W. CONTRACTOR TO LOCATE TIE IN LOCATION IN FIELD. COORDINATE WITH PROPERTY OWNER IF ACCESS NEEDED.

APPROXIMATE LOCATION OF EXISTING 24V CONTROL WIRE SLEEVE

APPROXIMATE LOCATION OF EXISTING CONTROLLER. RUN NEW 14-2 CONTROL WIRE TO NEW CONTROL VALVE LOCATIONS AND MAKE ALL CONNECTIONS NECESSARY FOR COMPLETE AND PROPER OPERATION INTO EXISTING CONTROLLER. COORDINATE WITH PROPERTY OWNER IF ACCESS NEEDED.

KEY MAP

0 15 30 60

DOUGLAS J. SMITH Certified Irrigation Designer CID IRRIGATION ASSOCIATION 42773

Print Date: June 6, 2016	Sheet Revisions			As Constructed	SUPERIOR TRAIL CONNECTION IRRIGATION PLANS	Project No./Code
File Name: PKM_IRRIGATION_MCCASLIN.DWG	Date:	Comments	Init.	No Revisions:		TAP M258-003
Horiz. Scale: Vert. Scale: As Noted				Revised:	Designer: / Detailer: / Structure Numbers	20671
FELSBURG HOLT & ULLEVIG 6300 South Syracuse Way Suite 600 Centennial, CO 80111 (303) 721-1440	R-X			Void:	Sheet Subset: IRRIGATION / Subset Sheets: IR1.9 of 10	Sheet Number 53

Town of Superior

CDOT Region 4 10601 W. 10th Street Greeley, CO 80634

LHN

$PLOT_INFO$

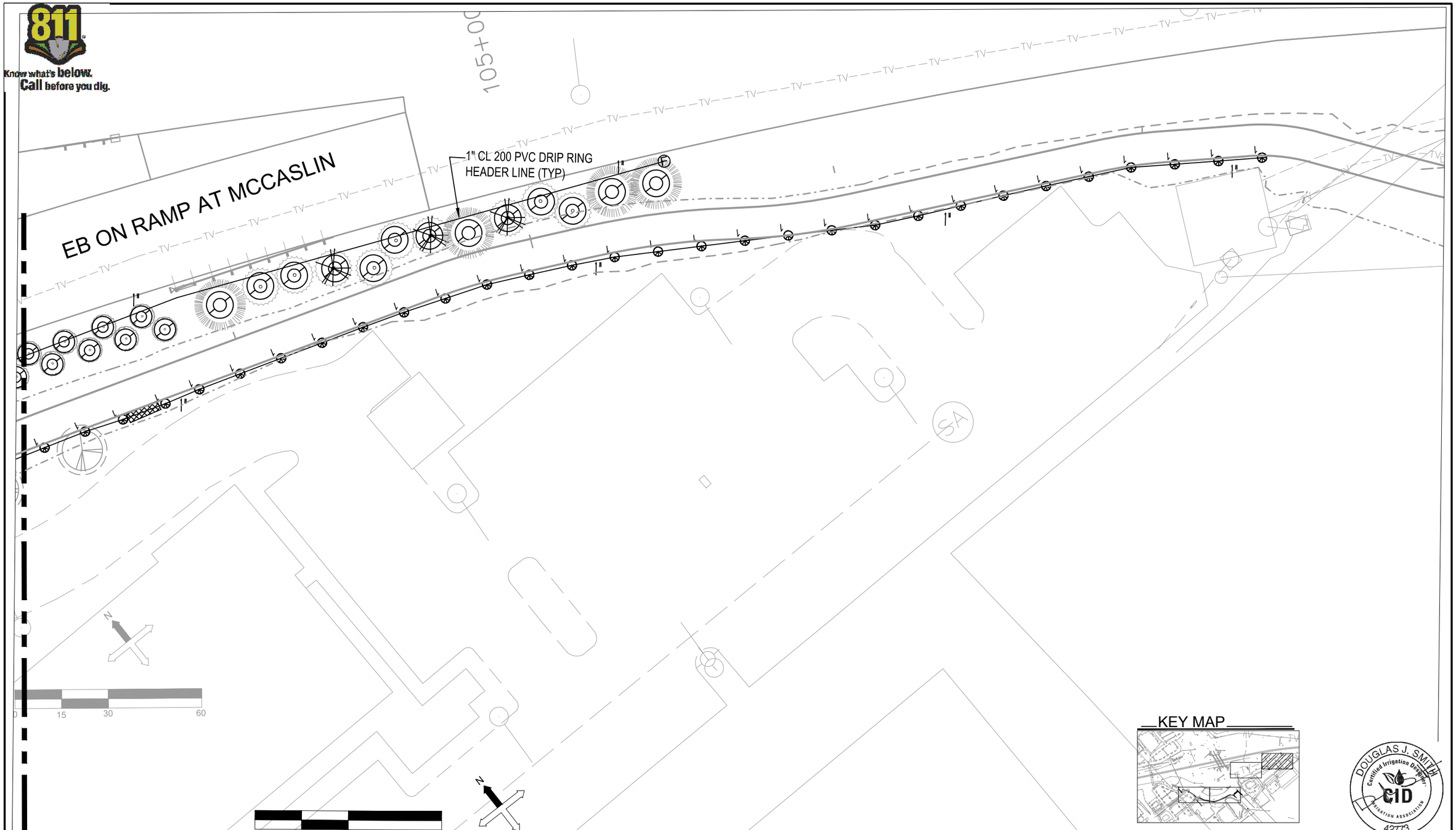

DOUGLAS J. SMITH
Certified Irrigation Designer
CID
IRRIGATION ASSOCIATION
42773

Print Date: June 6, 2016	Sheet Revisions		
File Name: PKM_IRRIGATION_MCCASLIN.DWG	Date:	Comments	Init.
Horiz. Scale: Vert. Scale: As Noted			

FELSBURG HOLT & ULLEVIG
6300 South Syracuse Way
Suite 600
Centennial, CO 80111
(303) 721-1440

R-X

Town of Superior

CDOT
Region 4
10601 W. 10th Street
Greeley, CO 80634

LHN

As Constructed
No Revisions:
Revised:
Void:

SUPERIOR TRAIL CONNECTION
IRRIGATION PLANS

Designer:
Detailer:
Structure Numbers
Sheet Subset: IRRIGATION
Subset Sheets: IR1.10 of 10

Project No./Code
TAP M258-003
20671
Sheet Number 54

$PLOT_INFO$

Know what's below. Call before you dig.

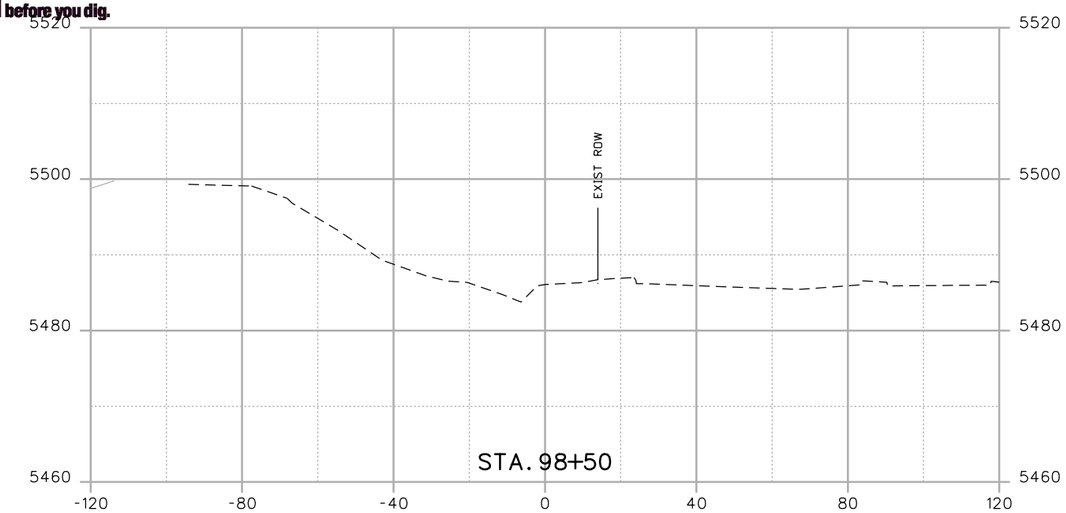

CUT AREA=0.00 S.F. 0.00 FILL AREA=0.00 S.F.
CUT VOLUME=0.00 C.Y. FILL VOLUME=0.00 C.Y.

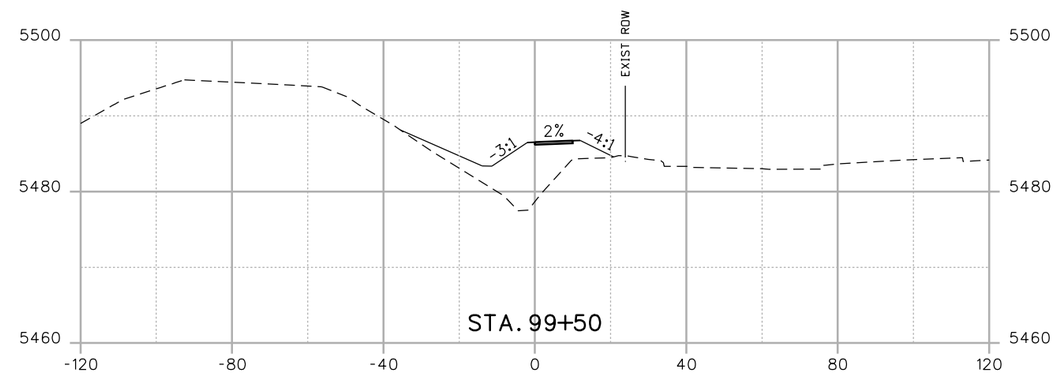

CUT AREA=0.34 S.F. -213.94 FILL AREA=118.00 S.F.
CUT VOLUME=14.32 C.Y. FILL VOLUME=175.77 C.Y.

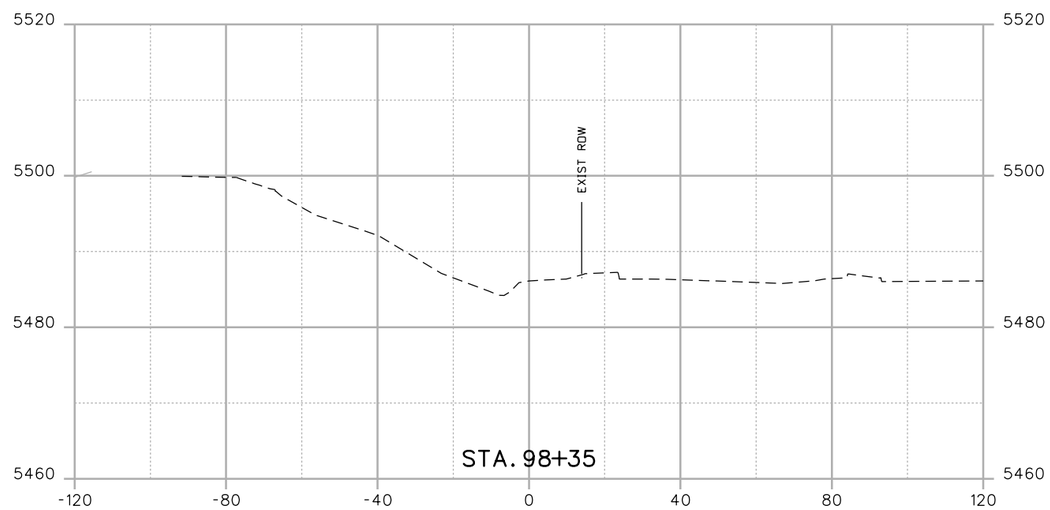

CUT AREA=0.00 S.F. 0.00 FILL AREA=0.00 S.F.
CUT VOLUME=0.00 C.Y. FILL VOLUME=0.00 C.Y.

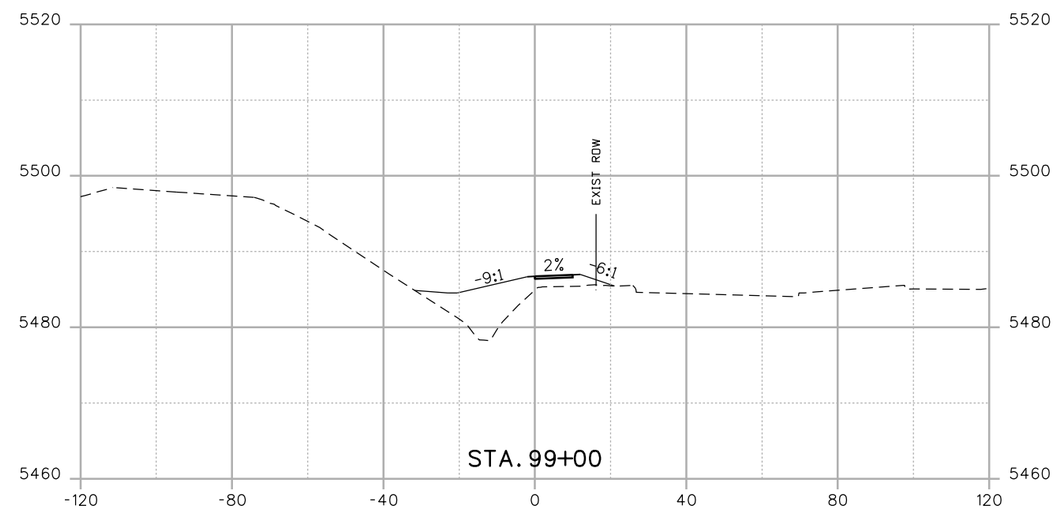

CUT AREA=15.14 S.F. -52.50 FILL AREA=71.83 S.F.
CUT VOLUME=14.01 C.Y. FILL VOLUME=66.51 C.Y.

Ashley
5/25/2016 8:54:51 AM
DGN MODEL:CDOT Default
I:\113166-02 - Superior Trail-BRT\15D002\

Print Date: 5/25/2016
File Name: 15D002DES_CrossSections.dgn
Horiz. Scale: 1:40 Vert. Scale: As Noted

FELSBURG HOLT & ULLEVIG
6300 South Syracuse Way
Suite 600
Centennial, CO 80111
(303) 721-1440

R-X

Sheet Revisions		
Date:	Comments	Init.

Town of Superior

CDOT
Region 4
10601 W. 10th Street
Greeley, CO 80634

LHN

As Constructed
No Revisions:
Revised:
Void:

SUPERIOR TRAIL CONNECTION
CROSS SECTIONS

Designer: KMD
Detailer: AMO
Sheet Subset: ROADWAY
Structure Numbers
Subset Sheets: XS-1 of 8

Project No./Code
TAP M258-003
20671
Sheet Number 55

Know what's below. Call before you dig.

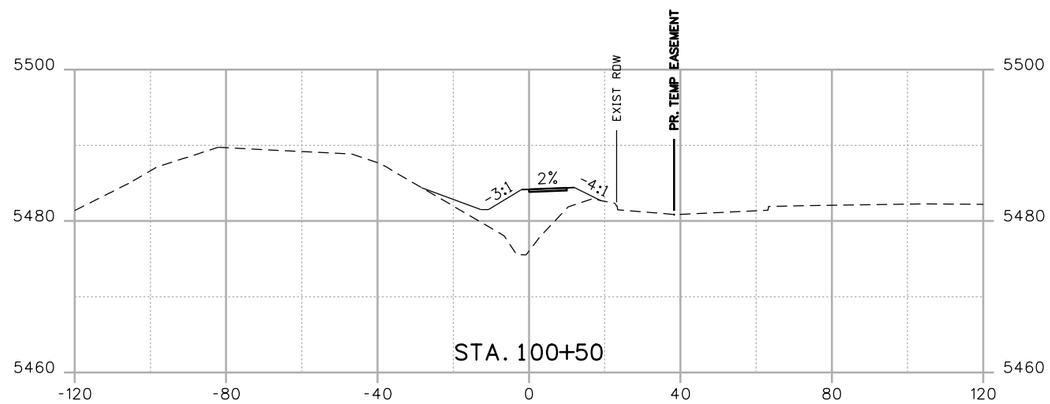

CUT AREA=0.09 S.F. -612.95 FILL AREA=99.75 S.F.
CUT VOLUME=0.20 C.Y. FILL VOLUME=191.37 C.Y.

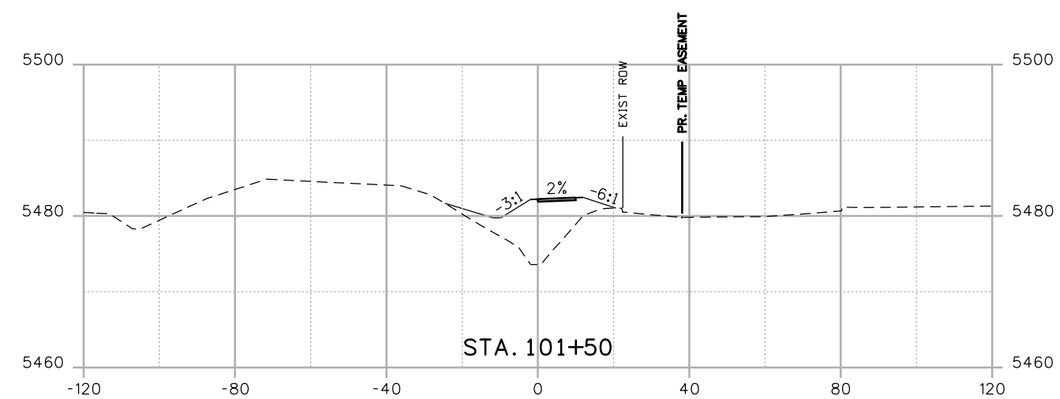

CUT AREA=0.00 S.F. -1006.18 FILL AREA=107.86 S.F.
CUT VOLUME=0.00 C.Y. FILL VOLUME=200.41 C.Y.

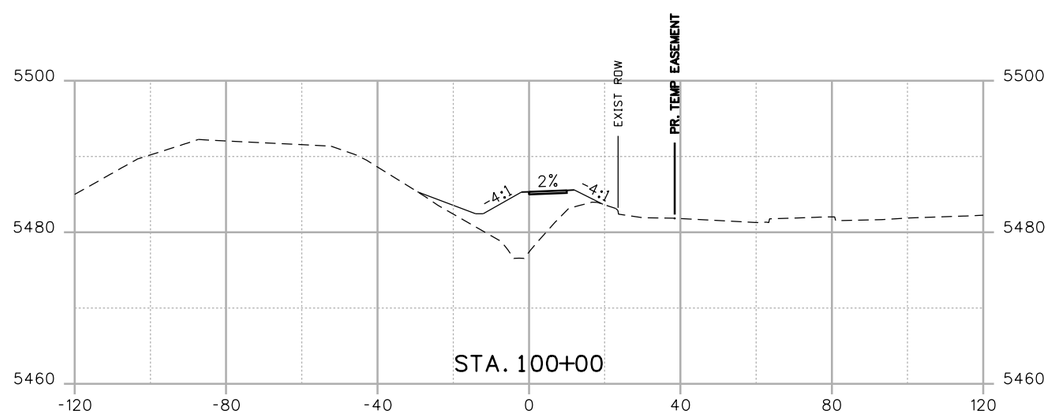

CUT AREA=0.13 S.F. -421.78 FILL AREA=106.93 S.F.
CUT VOLUME=0.43 C.Y. FILL VOLUME=208.27 C.Y.

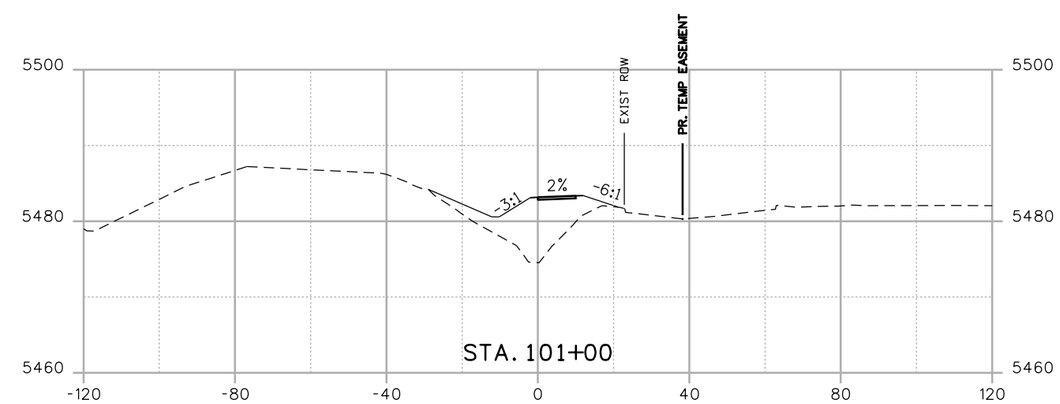

CUT AREA=0.00 S.F. -805.77 FILL AREA=108.58 S.F.
CUT VOLUME=0.08 C.Y. FILL VOLUME=192.90 C.Y.

Ashley
5/25/2016 8:54:52 AM
DGN MODEL:CDOT Default
I:\13166-02 - Superior Trail-BRT\15D002\

Print Date: 5/25/2016
File Name: 15D002DES_CrossSections.dgn
Horiz. Scale: 1:40 Vert. Scale: As Noted

FELSBURG HOLT & ULLEVIG
6300 South Syracuse Way
Suite 600
Centennial, CO 80111
(303) 721-1440

R-X

Sheet Revisions		
Date:	Comments	Init.

Town of Superior

CDOT
Region 4
10601 W. 10th Street
Greeley, CO 80634

LHN

As Constructed
No Revisions:
Revised:
Void:

SUPERIOR TRAIL CONNECTION
CROSS SECTIONS

Designer: KMD
Detailer: AMO
Sheet Subset: ROADWAY
Structure Numbers
Subset Sheets: XS-2 of 8

Project No./Code
TAP M258-003
20671
Sheet Number 56

Know what's below. Call before you dig.

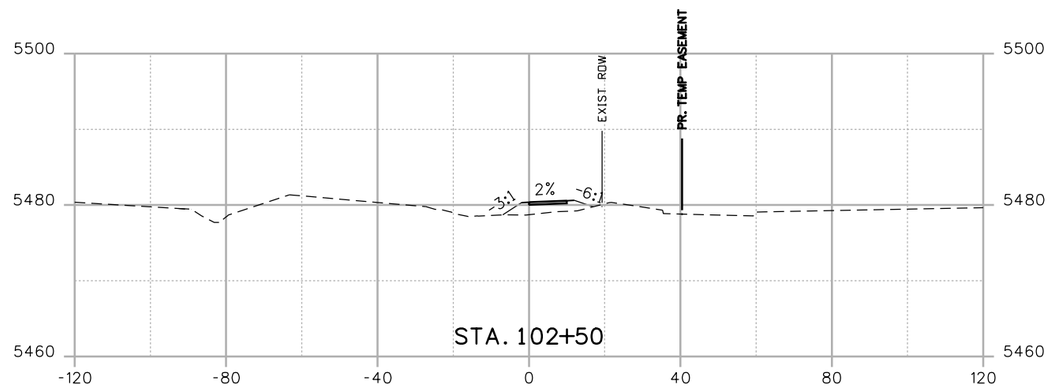

CUT AREA=15.19 S.F. -1299.19 FILL AREA=13.85 S.F.
CUT VOLUME=14.06 C.Y. FILL VOLUME=110.02 C.Y.

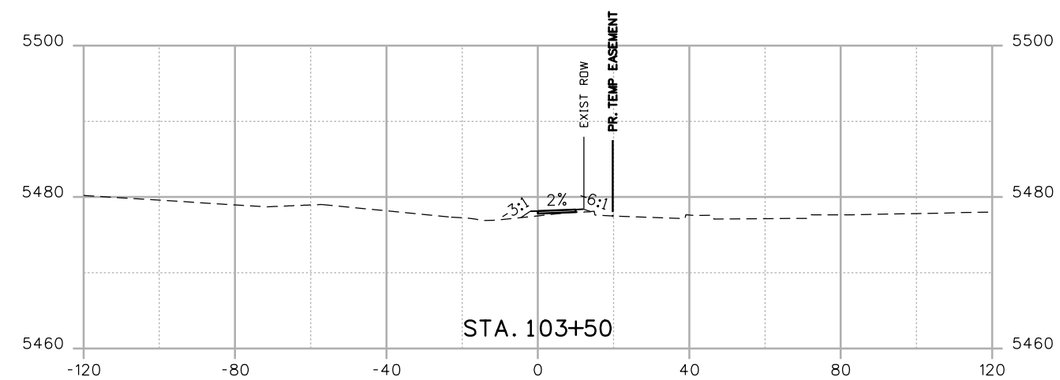

CUT AREA=25.34 S.F. -1251.13 FILL AREA=3.27 S.F.
CUT VOLUME=42.11 C.Y. FILL VOLUME=8.48 C.Y.

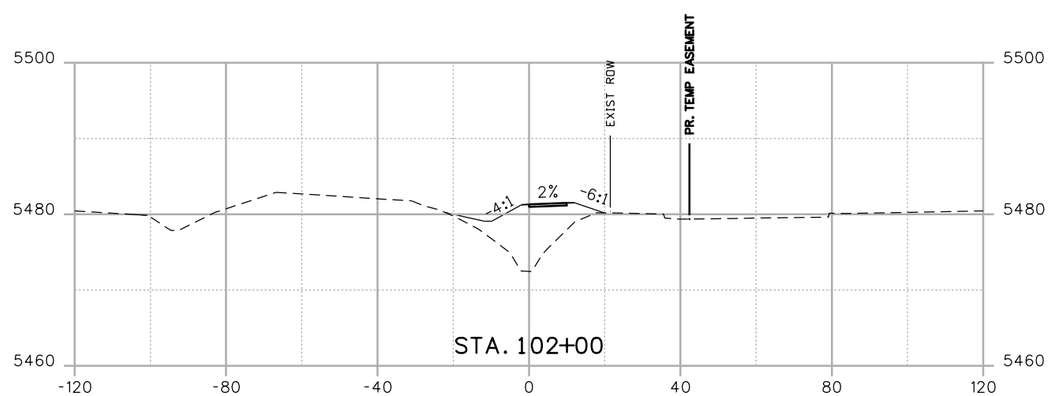

CUT AREA=0.00 S.F. -1203.24 FILL AREA=104.96 S.F.
CUT VOLUME=0.00 C.Y. FILL VOLUME=197.06 C.Y.

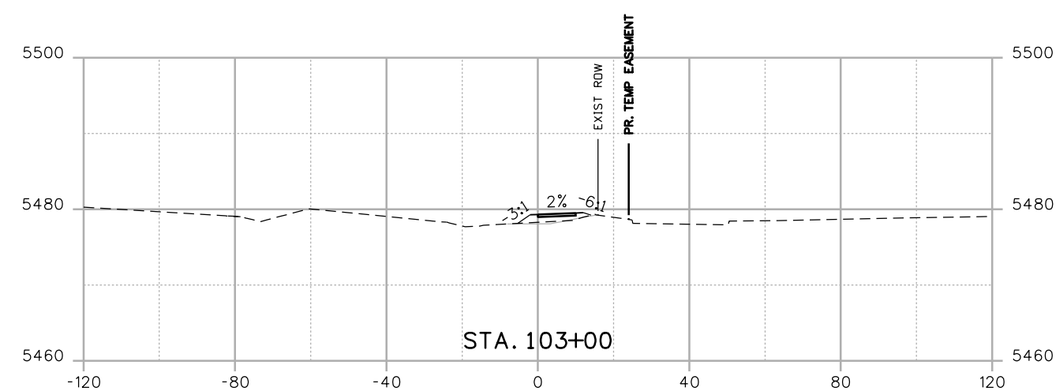

CUT AREA=20.14 S.F. -1284.76 FILL AREA=5.89 S.F.
CUT VOLUME=32.71 C.Y. FILL VOLUME=18.28 C.Y.

Ashley
5/25/2016 8:54:52 AM
DGN MODEL:CDOT Default
I:\13166-02 - Superior Trail-BRT\15D002\

Print Date: 5/25/2016
File Name: 15D002DES_CrossSections.dgn
Horiz. Scale: 1:40 Vert. Scale: As Noted

FELSBURG HOLT & ULLEVIG
6300 South Syracuse Way
Suite 600
Centennial, CO 80111
(303) 721-1440

R-X

Sheet Revisions		
Date:	Comments	Init.

Town of Superior

CDOT
Region 4
10601 W. 10th Street
Greeley, CO 80634

LHN

As Constructed
No Revisions:
Revised:
Void:

SUPERIOR TRAIL CONNECTION
CROSS SECTIONS

Designer: KMD
Detailer: AMO
Sheet Subset: ROADWAY
Structure Numbers
Subset Sheets: XS-3 of 8

Project No./Code
TAP M258-003
20671
Sheet Number 57

Know what's below. Call before you dig.

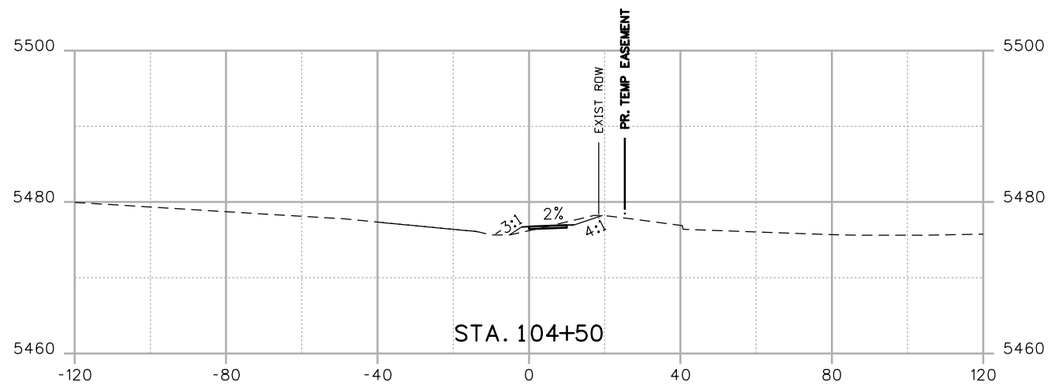

CUT AREA=35.82 S.F. -1148.05 FILL AREA=1.33 S.F.
CUT VOLUME=59.34 C.Y. FILL VOLUME=2.05 C.Y.

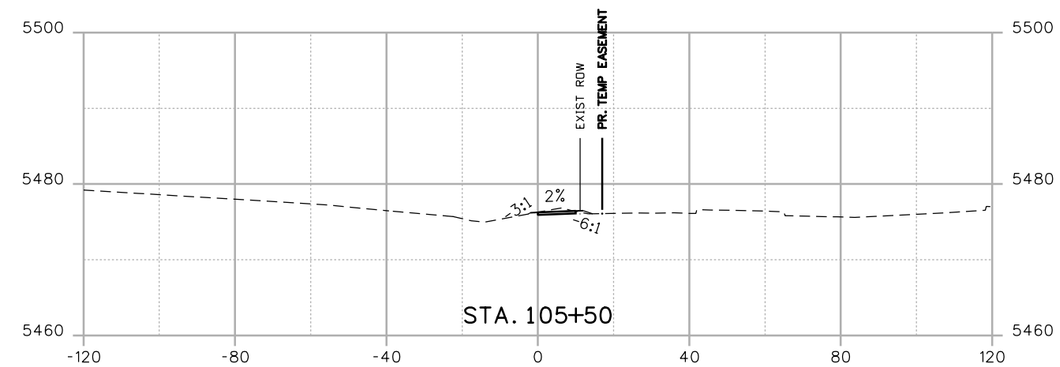

CUT AREA=41.24 S.F. -1007.32 FILL AREA=0.00 S.F.
CUT VOLUME=73.49 C.Y. FILL VOLUME=0.00 C.Y.

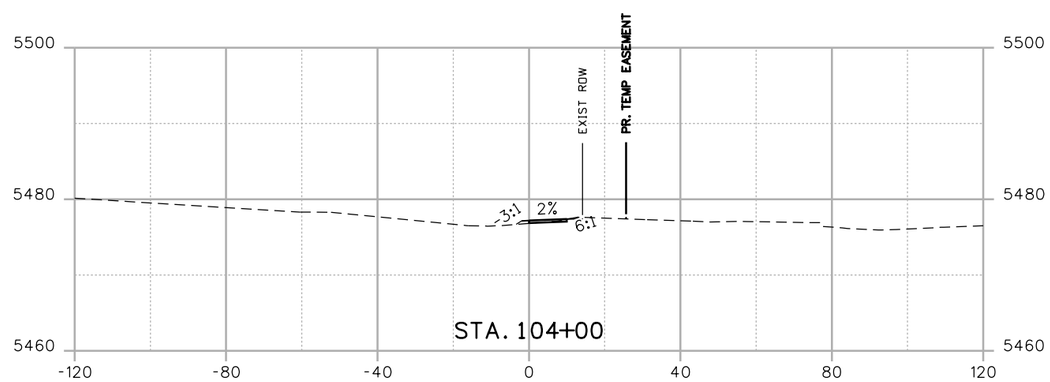

CUT AREA=28.27 S.F. -1205.34 FILL AREA=0.89 S.F.
CUT VOLUME=49.64 C.Y. FILL VOLUME=3.85 C.Y.

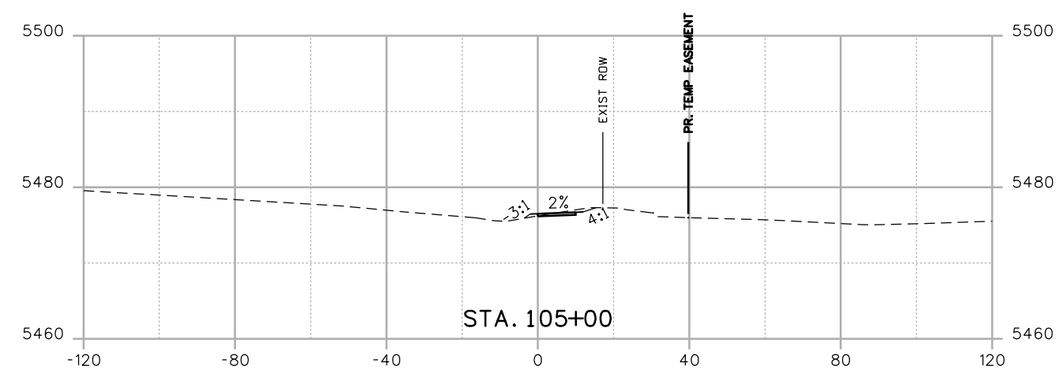

CUT AREA=38.13 S.F. -1080.81 FILL AREA=0.00 S.F.
CUT VOLUME=68.47 C.Y. FILL VOLUME=1.23 C.Y.

Ashley
5/25/2016 8:54:53 AM
DGN MODEL:CDOT Default
I:\13166-02 - Superior Trail-BRT\15D002\

Print Date: 5/25/2016
File Name: 15D002DES_CrossSections.dgn
Horiz. Scale: 1:40 Vert. Scale: As Noted

FELSBURG HOLT & ULLEVIG
6300 South Syracuse Way
Suite 600
Centennial, CO 80111
(303) 721-1440

R-X

Sheet Revisions		
Date:	Comments	Init.

Town of Superior

CDOT
Region 4
10601 W. 10th Street
Greeley, CO 80634

LHN

As Constructed
No Revisions:
Revised:
Void:

SUPERIOR TRAIL CONNECTION
CROSS SECTIONS

Designer: KMD
Detailer: AMO
Sheet Subset: ROADWAY
Structure Numbers
Subset Sheets: XS-4 of 8

Project No./Code
TAP M258-003
20671
Sheet Number 58

Know what's below. Call before you dig.

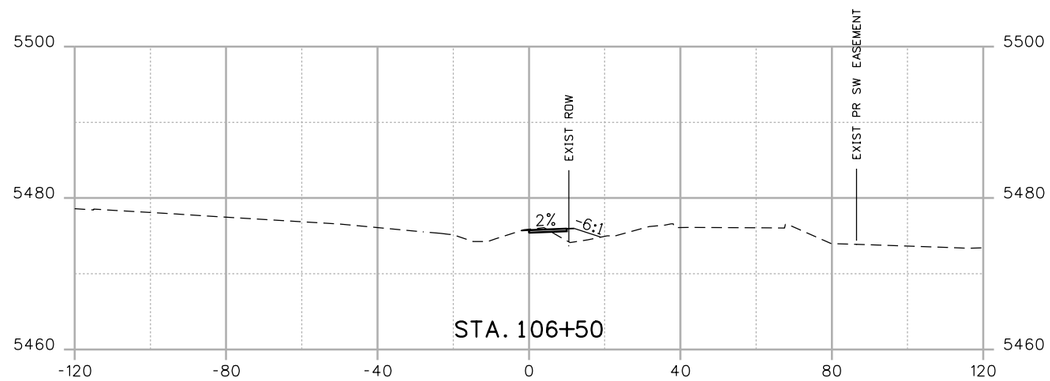

CUT AREA=42.32 S.F. -824.32 FILL AREA=2.35 S.F.
CUT VOLUME=93.09 C.Y. FILL VOLUME=2.18 C.Y.

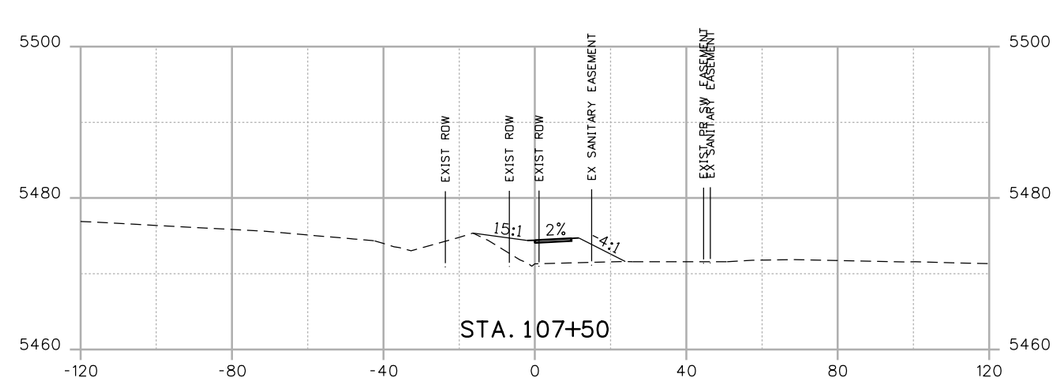

CUT AREA=8.96 S.F. -725.83 FILL AREA=29.02 S.F.
CUT VOLUME=52.73 C.Y. FILL VOLUME=31.28 C.Y.

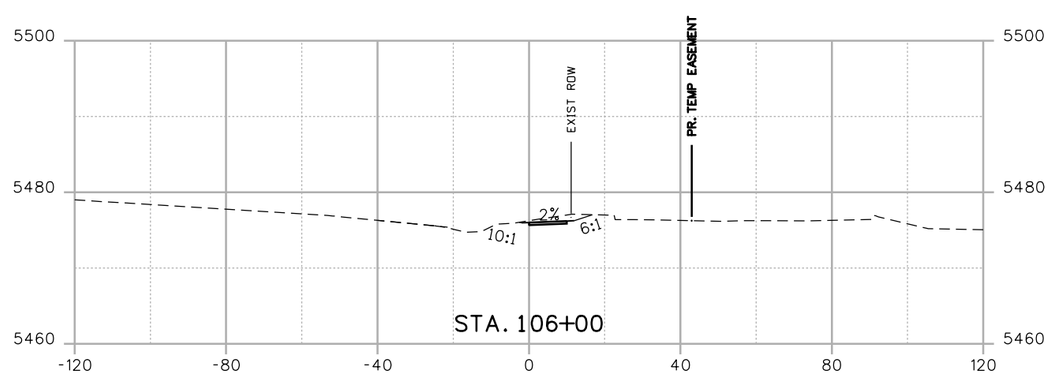

CUT AREA=58.22 S.F. -915.23 FILL AREA=0.00 S.F.
CUT VOLUME=92.09 C.Y. FILL VOLUME=0.00 C.Y.

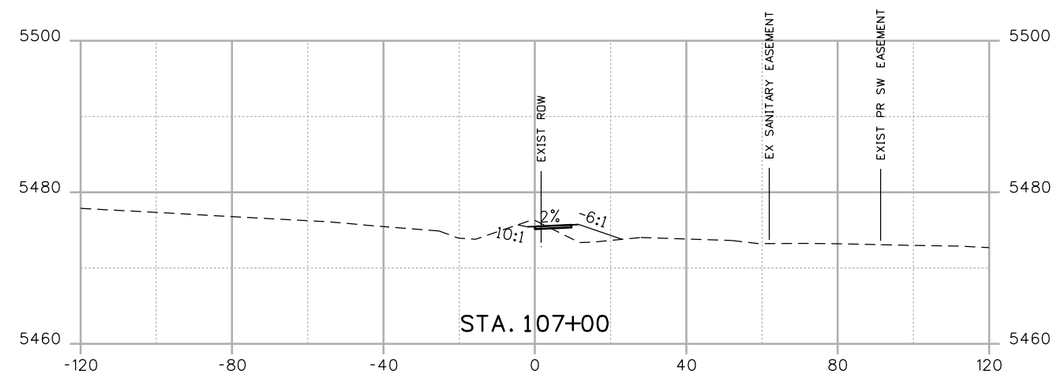

CUT AREA=47.99 S.F. -747.28 FILL AREA=4.76 S.F.
CUT VOLUME=83.62 C.Y. FILL VOLUME=6.58 C.Y.

Ashley
5/25/2016 8:54:54 AM
DGN MODEL:CDOT Default
I:\13166-02 - Superior Trail-BRT\15D002\

Print Date: 5/25/2016
File Name: 15D002DES_CrossSections.dgn
Horiz. Scale: 1:40 Vert. Scale: As Noted

FELSBURG HOLT & ULLEVIG
6300 South Syracuse Way
Suite 600
Centennial, CO 80111
(303) 721-1440

R-X

Sheet Revisions		
Date:	Comments	Init.

Town of Superior

CDOT Region 4
10601 W. 10th Street
Greeley, CO 80634

LHN

As Constructed
No Revisions:
Revised:
Void:

SUPERIOR TRAIL CONNECTION
CROSS SECTIONS

Designer: KMD
Detailer: AMO
Sheet Subset: ROADWAY
Structure Numbers
Subset Sheets: XS-5 of 8

Project No./Code
TAP M258-003
20671
Sheet Number 59

Know what's below. Call before you dig.

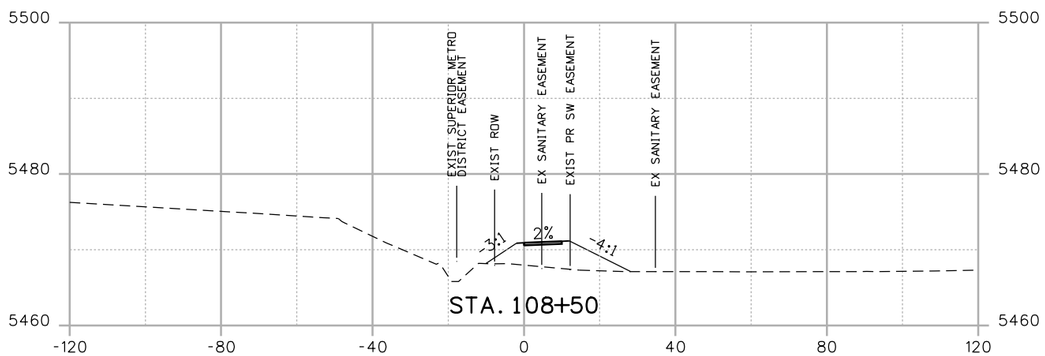

CUT AREA=0.17 S.F. -832.58 FILL AREA=41.54 S.F.

CUT VOLUME=1.71 C.Y. FILL VOLUME=64.95 C.Y.

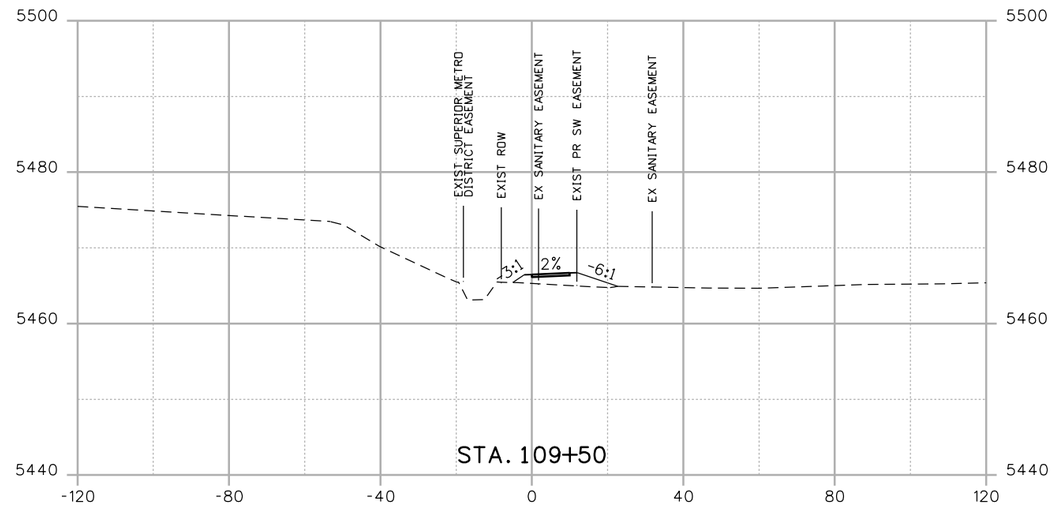

CUT AREA=15.66 S.F. -907.82 FILL AREA=17.34 S.F.

CUT VOLUME=21.54 C.Y. FILL VOLUME=40.79 C.Y.

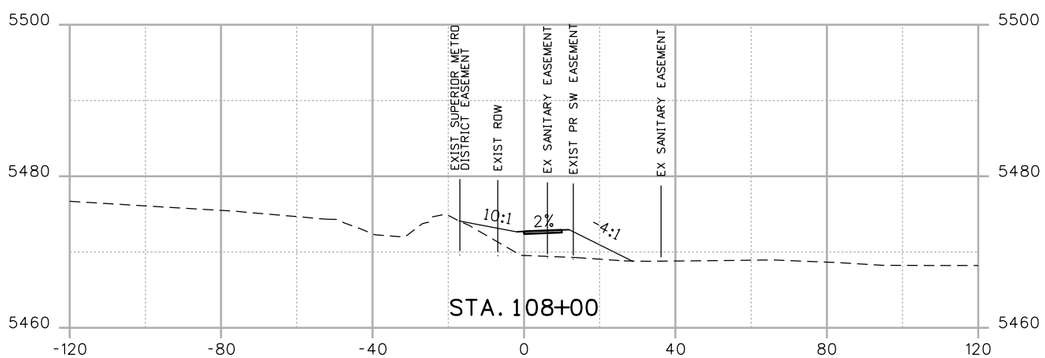

CUT AREA=1.68 S.F. -769.34 FILL AREA=28.61 S.F.

CUT VOLUME=9.85 C.Y. FILL VOLUME=53.36 C.Y.

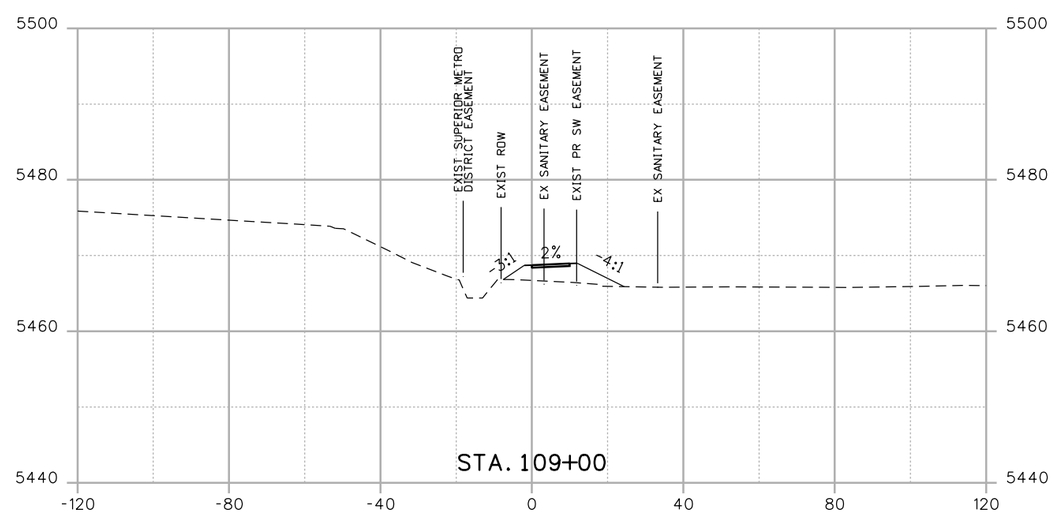

CUT AREA=7.61 S.F. -888.57 FILL AREA=26.71 S.F.

CUT VOLUME=7.20 C.Y. FILL VOLUME=63.19 C.Y.

Ashley
5/25/2016 8:54:55 AM
DGN MODEL:CDOT Default
I:\113166-02 - Superior Trail-BRT\15D002\

Print Date: 5/25/2016
File Name: 15D002DES_CrossSections.dgn
Horiz. Scale: 1:40 Vert. Scale: As Noted

FELSBURG HOLT & ULLEVIG
6300 South Syracuse Way
Suite 600
Centennial, CO 80111
(303) 721-1440

R-X

Sheet Revisions		
Date:	Comments	Init.

Town of Superior

CDOT
Region 4
10601 W. 10th Street
Greeley, CO 80634

LHN

As Constructed
No Revisions:
Revised:
Void:

SUPERIOR TRAIL CONNECTION
CROSS SECTIONS

Designer: KMD
Detailer: AMO
Sheet Subset: ROADWAY
Structure Numbers
Subset Sheets: XS-6 of 8

Project No./Code
TAP M258-003
20671
Sheet Number 60

Know what's below. Call before you dig.

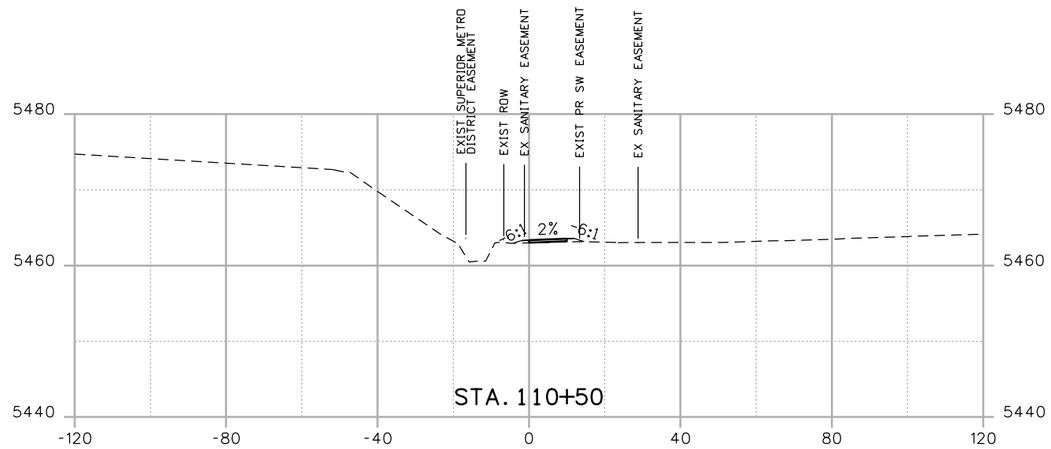

CUT AREA=26.24 S.F. -858.42 FILL AREA=2.07 S.F.
CUT VOLUME=44.92 C.Y. FILL VOLUME=8.26 C.Y.

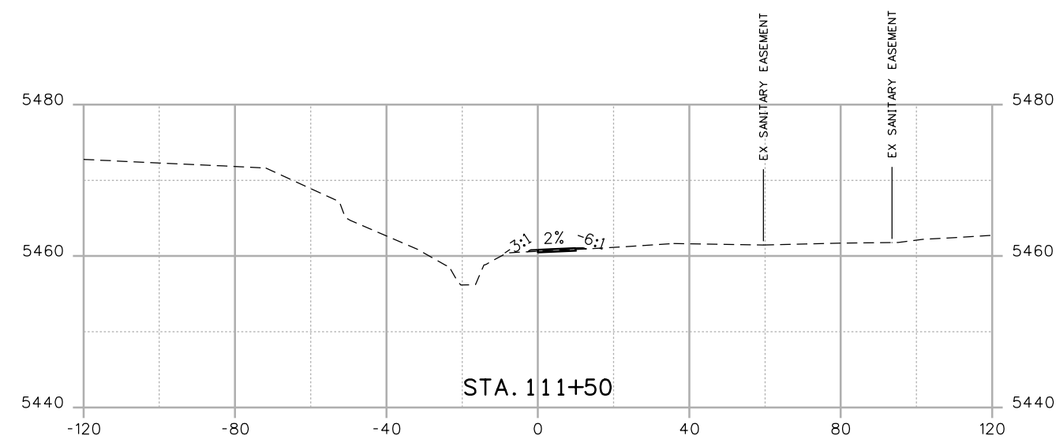

CUT AREA=28.05 S.F. -775.02 FILL AREA=0.94 S.F.
CUT VOLUME=48.01 C.Y. FILL VOLUME=4.94 C.Y.

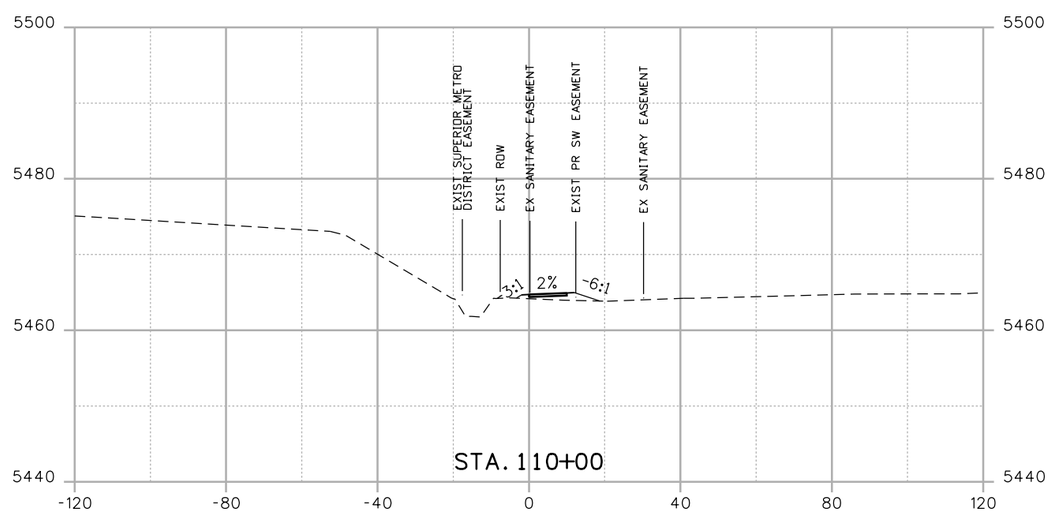

CUT AREA=22.28 S.F. -895.08 FILL AREA=6.85 S.F.
CUT VOLUME=35.13 C.Y. FILL VOLUME=22.40 C.Y.

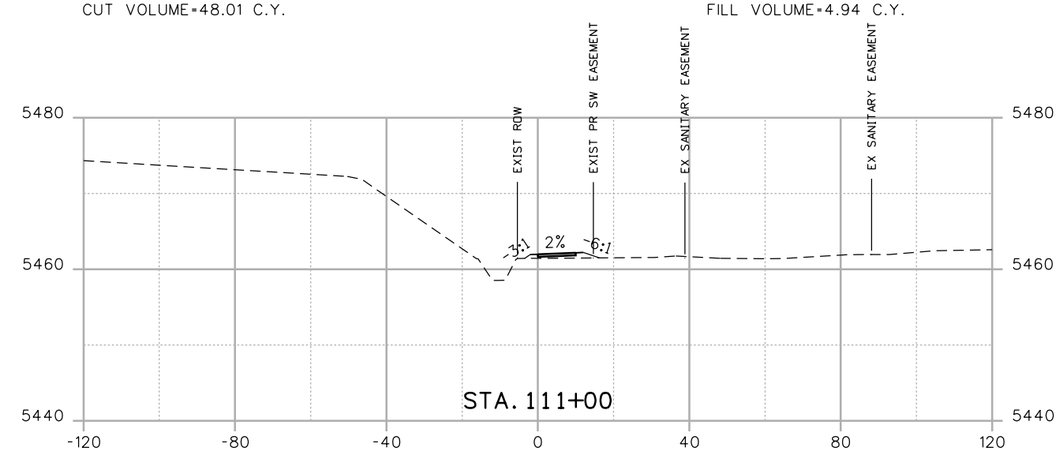

CUT AREA=23.80 S.F. -818.09 FILL AREA=4.40 S.F.
CUT VOLUME=46.33 C.Y. FILL VOLUME=6.00 C.Y.

Ashley
5/25/2016 8:54:56 AM
DGN MODEL:CDOT Default
I:\113166-02 - Superior Trail-BRT\15D002\

Print Date: 5/25/2016
File Name: 15D002DES_CrossSections.dgn
Horiz. Scale: 1:40 Vert. Scale: As Noted

FELSBURG HOLT & ULLEVIG
6300 South Syracuse Way
Suite 600
Centennial, CO 80111
(303) 721-1440

R-X

Sheet Revisions		
Date:	Comments	Init.

Town of Superior

CDOT
Region 4
10601 W. 10th Street
Greeley, CO 80634

LHN

As Constructed
No Revisions:
Revised:
Void:

SUPERIOR TRAIL CONNECTION
CROSS SECTIONS

Designer: KMD
Detailer: AMO
Sheet Subset: ROADWAY
Structure Numbers
Subset Sheets: XS-7 of 8

Project No./Code
TAP M258-003
20671
Sheet Number 61

Know what's below.
Call before you dig.

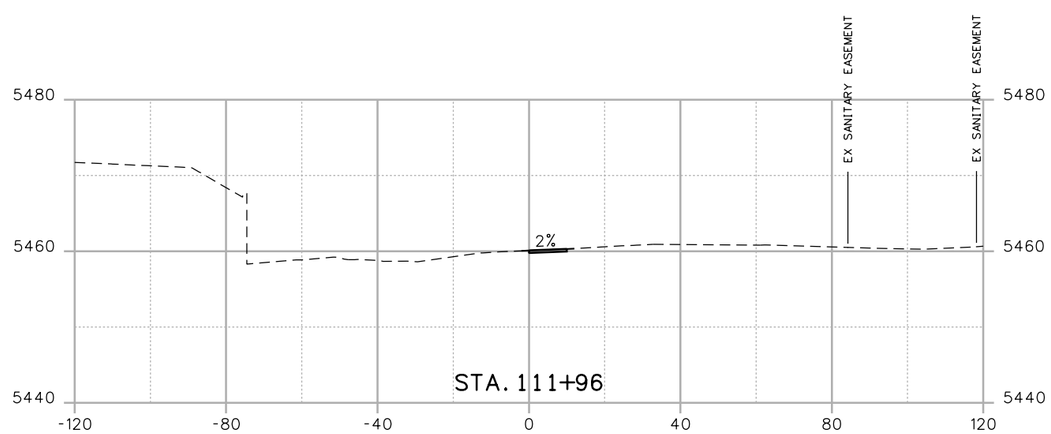

CUT AREA=30.33 S.F.
CUT VOLUME=50.19 C.Y.

-725.66

FILL AREA=0.02 S.F.
FILL VOLUME=0.82 C.Y.

Ashley
5/25/2016 8:54:56 AM
DGN MODEL:CDOT Default
I:\13166-02 - Superior Trail-BRT\15D002\

Print Date: 5/25/2016
File Name: 15D002DES_CrossSections.dgn
Horiz. Scale: 1:40 Vert. Scale: As Noted

FELSBURG HOLT & ULLEVIG
6300 South Syracuse Way
Suite 600
Centennial, CO 80111
(303) 721-1440

R-X

Sheet Revisions		
Date:	Comments	Init.

Town of Superior

CDOT
Region 4
10601 W. 10th Street
Greeley, CO 80634

LHN

As Constructed
No Revisions:
Revised:
Void:

SUPERIOR TRAIL CONNECTION
CROSS SECTIONS

Designer: KMD
Detailer: AMO
Sheet Subset: ROADWAY
Structure Numbers
Subset Sheets: XS-8 of 8

Project No./Code
TAP M258-003
20671
Sheet Number 62

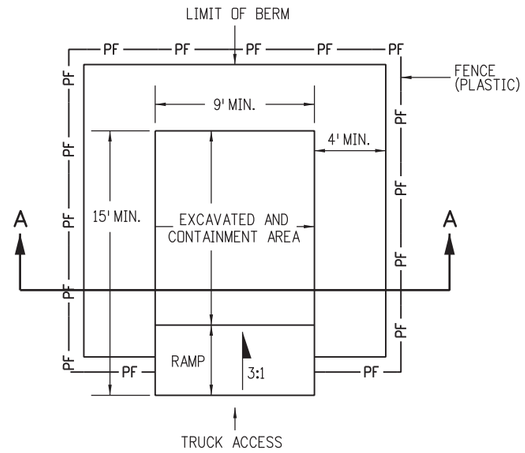

PLAN VIEW

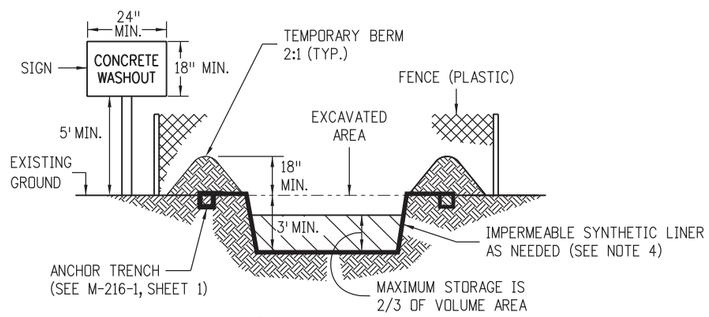

SECTION A-A

NOTES:

1. A FENCE (PLASTIC) CONFORMING TO SECTION 607 SHALL BE INSTALLED AROUND THE CONCRETE WASHOUT AREA, EXCEPT AT THE OPENING.
2. THE CONCRETE WASHOUT SIGN SHALL HAVE LETTERS AT LEAST 3 INCHES HIGH AND CONFORM TO SUBSECTION 630.02.
3. ALL MATERIALS AND LABOR TO COMPLETE THE CONCRETE WASHOUT STRUCTURE SHALL BE INCLUDED IN THE COST OF WORK AND NOT PAID FOR SEPARATELY.
4. THE BOTTOM OF EXCAVATION SHALL BE A MINIMUM OF FIVE FEET ABOVE GROUND WATER. IF NOT, IT SHALL BE LINED WITH AN IMPERMEABLE SYNTHETIC LINER THAT IS DESIGNED TO CONTROL SEEPAGE AT A MAXIMUM RATE OF 6 TO 10 CENTIMETERS PER SECOND.
5. THE PAY ITEM NUMBER FOR CONCRETE WASHOUT STRUCTURE (EACH) IS 208-00045.

CONCRETE WASHOUT STRUCTURE

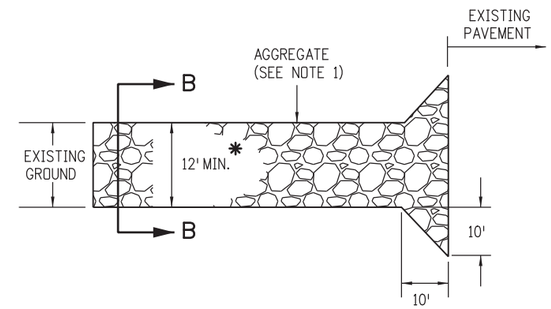

PLAN VIEW

* SHALL EXTEND FULL WIDTH OF INGRESS AND EGRESS OPERATION.

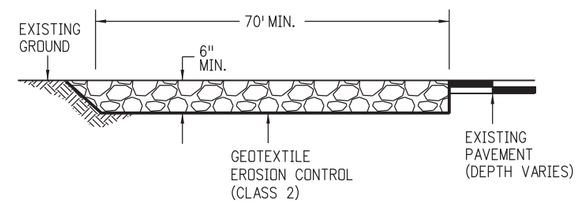

ELEVATION SECTION

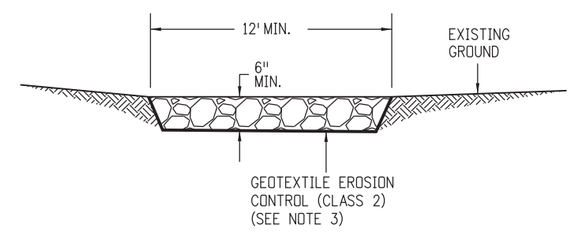

SECTION B-B

NOTES:

1. AGGREGATE SHALL CONFORM TO SUBSECTION 208.02 (K).
2. THE CONTRACTOR SHALL PROTECT CURB AND GUTTER THAT CROSSES THE ENTRANCE FROM DAMAGE. PROTECTION OF THE CURB AND GUTTER SHALL BE INCLUDED IN THE COST OF WORK AND NOT PAID FOR SEPARATELY.
3. GEOTEXTILE SHALL CONFORM TO SUBSECTION 712.08.
4. ALL MATERIALS AND LABOR TO COMPLETE THE VEHICLE TRACKING PAD SHALL BE INCLUDED IN THE COST OF WORK AND NOT PAID FOR SEPARATELY.
5. THE PAY ITEM NUMBER FOR VEHICLE TRACKING PAD (EACH) IS 208-00070.

VEHICLE TRACKING PAD

Computer File Information			
Creation Date: 07/04/12	Initials: JBK		
Last Modification Date: 03/29/16	Initials: LTA	(R-X)	
Full Path: www.coloradodot.info/business/designsupport		(R-X)	
Drawing File Name: 2080101011.dgn		(R-X)	
CAD Ver.: MicroStation V8 Scale: Not to Scale Units: English		(R-X)	

Sheet Revisions	
Date:	Comments
07/16/15	Deleted the two Soil Retention Blanket detail sheets. They are now standard M-216-1 Soil Retention Covering.
03/29/16	Minor revisions to some dimensions and General Notes.

Colorado Department of Transportation
4201 East Arkansas Avenue
CDOT HQ, 4th Floor
Denver, CO 80222
Phone: 303-757-9021 FAX: 303-757-9868
Division of Project Support JBK/LTA

TEMPORARY EROSION CONTROL

Issued By: Project Development Branch on July 4, 2012

STANDARD PLAN NO.

M-208-1

Sheet No. 1 of 11

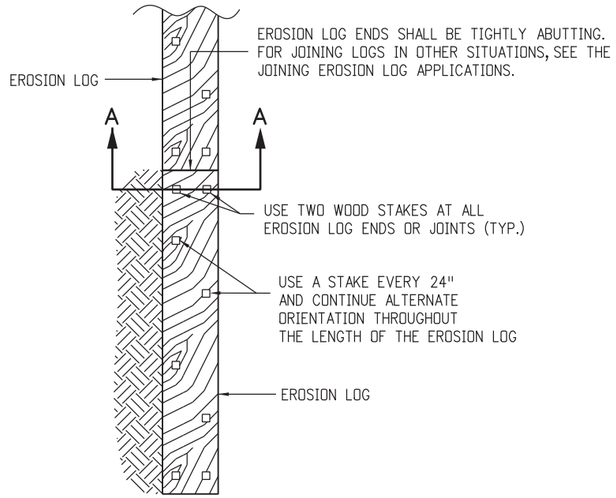

PLAN VIEW

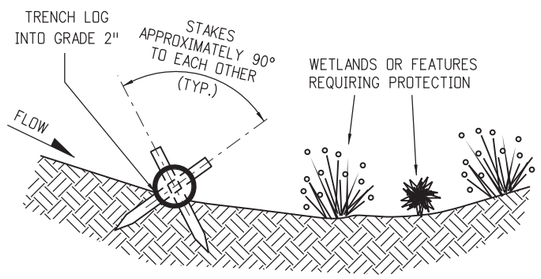

SECTION A-A

TYPICAL STAKE INSTALLATION

EROSION LOGS PAY ITEMS	
NUMBER	DESCRIPTION
208-00012	TYPE 1 (9")
208-00002	TYPE 1 (12")
208-00013	TYPE 1 (20")
208-00007	TYPE 2 (8")
208-00008	TYPE 2 (12")
208-00009	TYPE 2 (18")

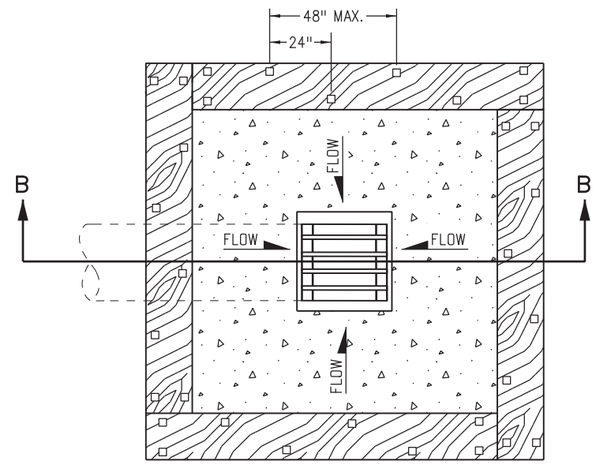

PLAN VIEW

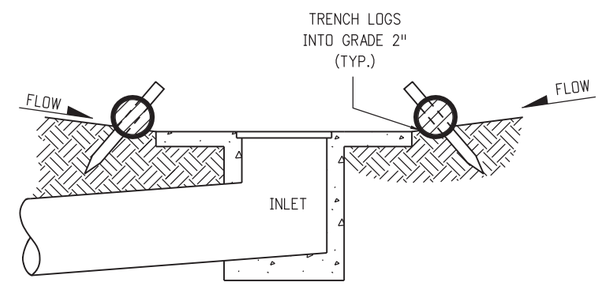

SECTION B-B

NOTE: LOCATE EROSION LOGS AT THE OUTSIDE EDGE OF THE CONCRETE APRON.

EROSION LOG FILTER AT DROP INLET

NOTE

1. STAKES SHALL BE INCLUDED IN THE COST OF THE EROSION LOGS.

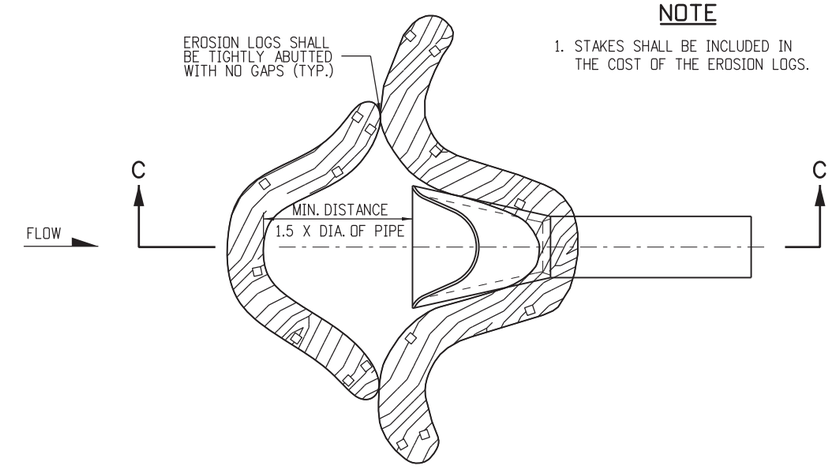

PLAN VIEW

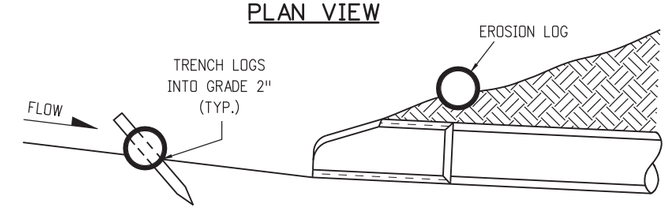

SECTION C-C
(NOT ALL LOGS SHOWN)

EROSION LOG CULVERT INLET PROTECTION

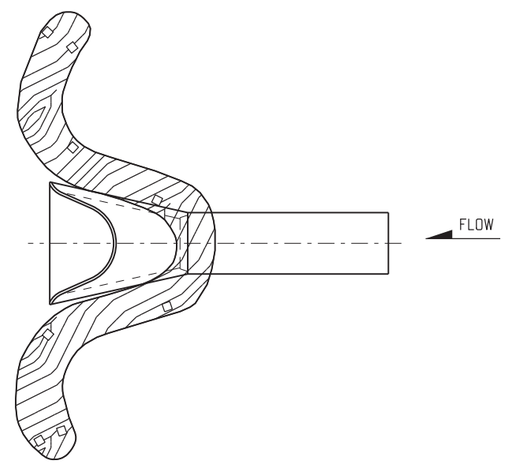

EROSION LOG CULVERT OUTLET PROTECTION

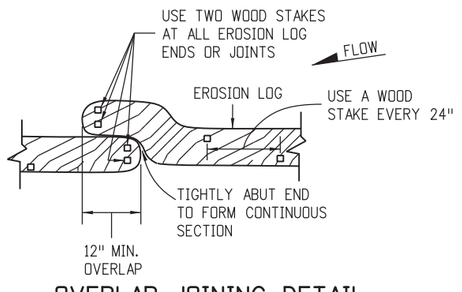

OVERLAP JOINING DETAIL

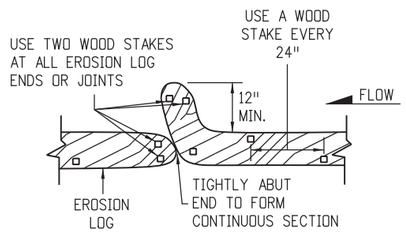

J-HOOK JOINING DETAIL

JOINING EROSION LOG APPLICATIONS

EROSION LOG APPLICATIONS

Computer File Information		
Creation Date: 07/04/12	Initials: JBK	
Last Modification Date: 03/29/16	Initials: LTA	(R-X)
Full Path: www.coloradodot.info/business/designsupport		(R-X)
Drawing File Name: 2080102011.dgn		(R-X)
CAD Ver.: MicroStation V8 Scale: Not to Scale Units: English		(R-X)

Sheet Revisions	
Date:	Comments
03/29/16	Minor revisions to some dimensions. Added Erosion Logs Pay Item table.

Colorado Department of Transportation
4201 East Arkansas Avenue
CDOT HQ, 4th Floor
Denver, CO 80222
Phone: 303-757-9021 FAX: 303-757-9868
Division of Project Support JBK/LTA

TEMPORARY EROSION CONTROL

Issued By: Project Development Branch on July 4, 2012

STANDARD PLAN NO.

M-208-1

Sheet No. 2 of 11

NOTES

1. SILT FENCE SHALL HAVE A MAXIMUM DRAINAGE AREA OF ONE-QUARTER ACRE PER 100 FEET OF SILT FENCE LENGTH; MAXIMUM SLOPE LENGTH BEHIND BARRIER IS 100 FEET; MAXIMUM GRADIENT BEHIND THE BARRIER IS 2:1.
2. SILT FENCE USED AT TOE OF SLOPE SHALL BE PLACED 5 TO 10 FEET BEYOND TOE OF SLOPE TO PROVIDE STORAGE CAPACITY.
3. SILT FENCE SHALL BE PLACED ON THE CONTOUR WITH ENDS FLARED UP SLOPE.
4. THE MAXIMUM LENGTH OF EROSION LOGS OR SILT FENCES WITHOUT A FLARED END TURNING UPSLOPE IS 150 FEET.

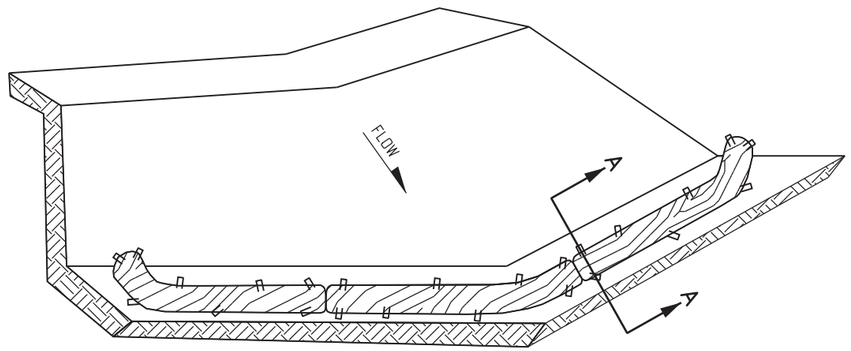

ISOMETRIC VIEW

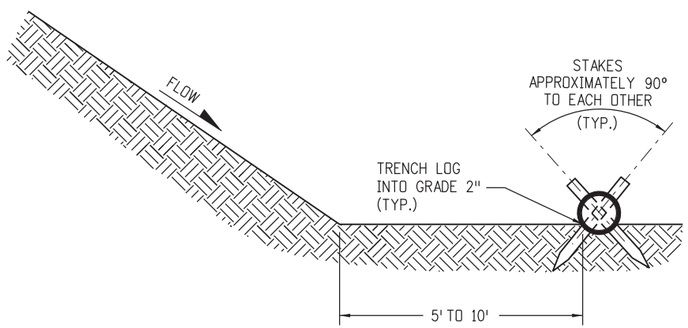

SECTION A-A

NOTES:

1. EROSION LOGS USED AT TOE OF SLOPE SHALL BE PLACED 5 TO 10 FEET BEYOND TOE OF SLOPE TO PROVIDE STORAGE CAPACITY.
2. EROSION LOGS SHALL BE PLACED ON THE CONTOUR WITH ENDS FLARED UP SLOPE.
3. SEE SHEET 2 OF 11 FOR JOINING LOGS DETAIL.

EROSION LOGS PAY ITEMS	
NUMBER	DESCRIPTION
208-00012	TYPE 1 (9")
208-00002	TYPE 1 (12")
208-00013	TYPE 1 (20")
208-00007	TYPE 2 (8")
208-00008	TYPE 2 (12")
208-00009	TYPE 2 (18")

EROSION LOG TOE OF SLOPE PROTECTION

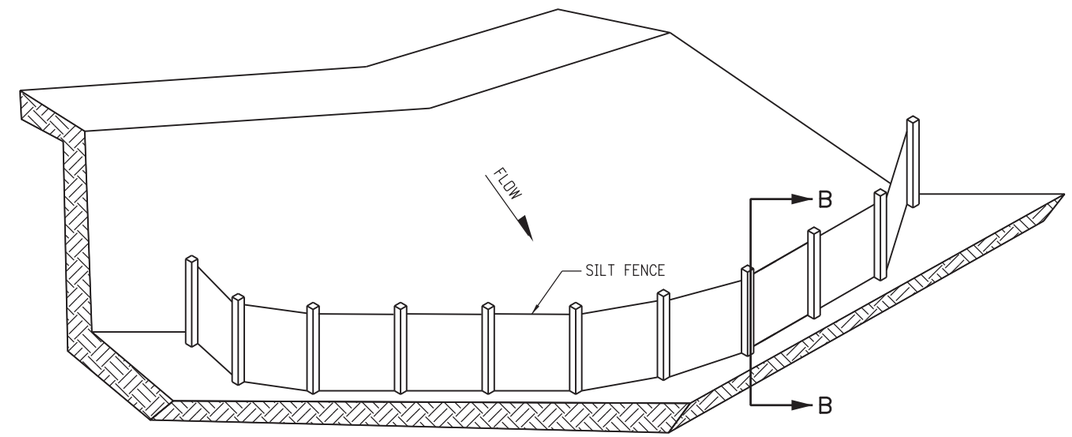

ISOMETRIC VIEW

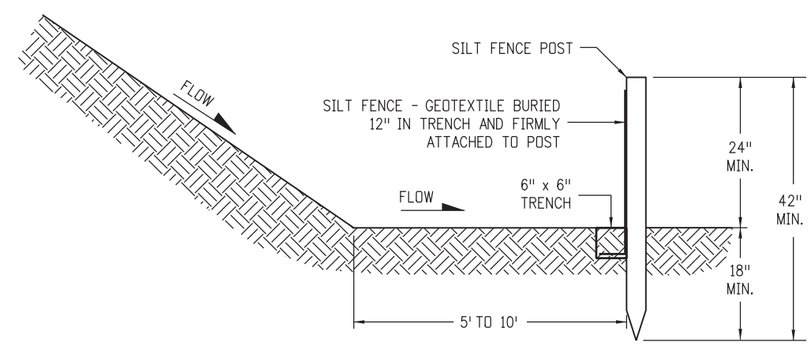

SECTION B-B

SILT FENCE TOE OF SLOPE PROTECTION

NOTE: THE PAY ITEM NUMBER FOR SILT FENCE (LF) IS 208-00020.

TOE OF SLOPE PROTECTION APPLICATIONS

Computer File Information		
Creation Date: 07/04/12	Initials: JBK	
Last Modification Date: 03/29/16	Initials: LTA	(R-X)
Full Path: www.coloradodot.info/business/designsupport		(R-X)
Drawing File Name: 2080103011.dgn		(R-X)
CAD Ver.: MicroStation V8 Scale: Not to Scale	Units: English	(R-X)

Sheet Revisions	
Date:	Comments
03/29/16	Minor revisions to some dimensions. Added Erosion Logs Pay Item table.

Colorado Department of Transportation
4201 East Arkansas Avenue
CDOT HQ, 4th Floor
Denver, CO 80222
Phone: 303-757-9021 FAX: 303-757-9868
Division of Project Support JBK/LTA

TEMPORARY EROSION CONTROL

Issued By: Project Development Branch on July 4, 2012

STANDARD PLAN NO.

M-208-1

Sheet No. 3 of 11

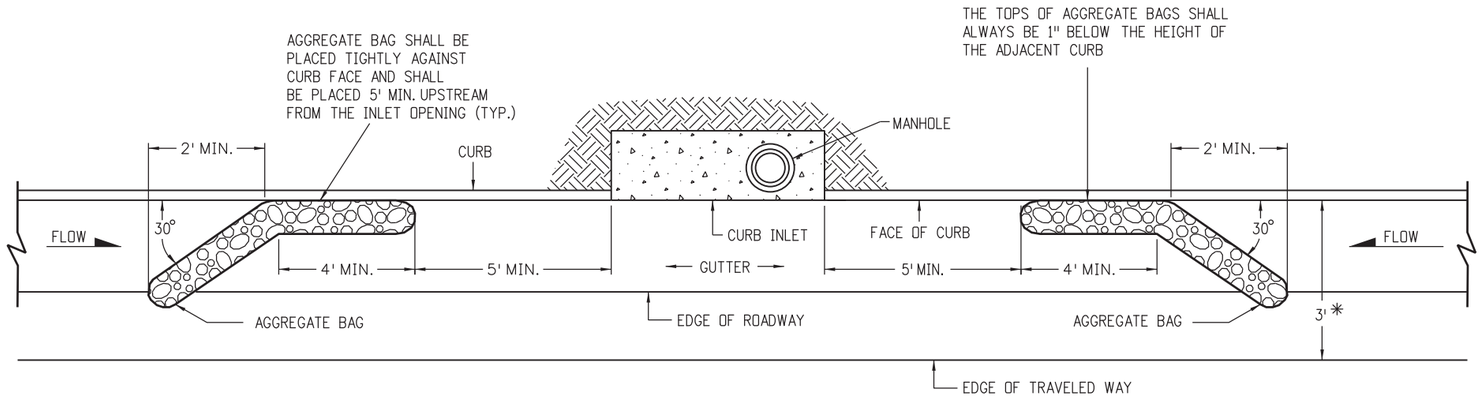

PLAN VIEW

* NOTE: USE AGGREGATE BAGS ONLY WHEN THERE IS A MINIMUM CLEARANCE OF 3 FEET FROM THE EDGE OF THE TRAVELED WAY TO THE FACE OF CURB.

LENGTH OF INLET (L)	NUMBER OF AGGREGATE BAGS UPSTREAM OF INLET
0' - 5'	1
6' -10'	2
L > 10'	3

AGGREGATE BAGS AT STORM DRAIN INLET (TYPE I)

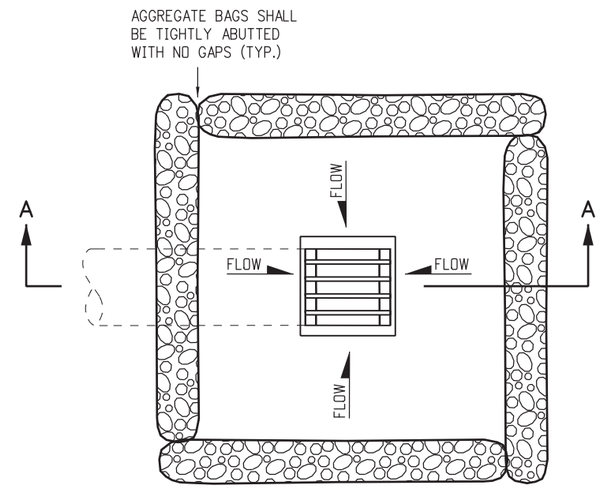

PLAN VIEW

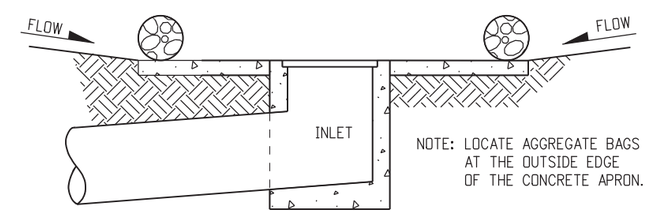

SECTION A-A

AGGREGATE BAGS AT DROP INLET

AGGREGATE BAG APPLICATIONS

NOTE: THE PAY ITEM NUMBER FOR AGGREGATE BAG (LF) IS 208-00035

Computer File Information			Sheet Revisions	
Creation Date: 07/04/12 Initials: JBK			Date:	Comments
Last Modification Date: 03/29/16 Initials: LTA	(R-X)	(R-X)	03/29/16	Added some dimensions and Note.
Full Path: www.coloradodot.info/business/designsupport	(R-X)	(R-X)		
Drawing File Name: 2080104011.dgn	(R-X)	(R-X)		
CAD Ver.: MicroStation V8 Scale: Not to Scale Units: English	(R-X)	(R-X)		

Colorado Department of Transportation
4201 East Arkansas Avenue
CDOT HQ, 4th Floor
Denver, CO 80222
Phone: 303-757-9021 FAX: 303-757-9868
Division of Project Support JBK/LTA

TEMPORARY EROSION CONTROL

Issued By: Project Development Branch on July 4, 2012

STANDARD PLAN NO.

M-208-1

Sheet No. 4 of 11

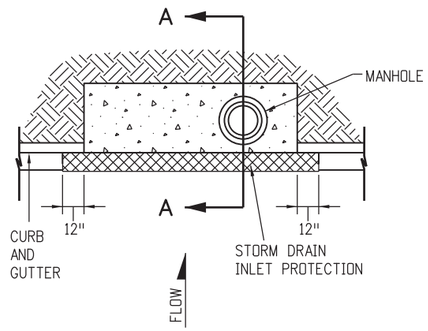

PLAN VIEW

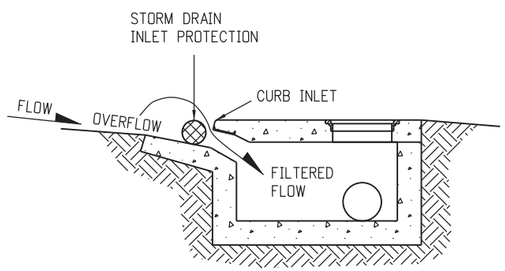

SECTION A-A

STORM DRAIN INLET PROTECTION (TYPE I)

NOTES

1. INLET PROTECTION DEVICE SHALL EXTEND 12 INCHES PAST EACH END OF THE INLET.
2. THE PAY ITEM NUMBER FOR STORM DRAIN INLET PROTECTION (TYPE I) (EACH) IS 208-00051.
3. FOR STORM DRAIN INLET TYPES I AND II, IF THERE IS A MINIMUM CLEARANCE OF 3 FEET FROM THE EDGE OF THE TRAVELED WAY TO THE FACE OF CURB, USE THE AGGREGATE BAGS AT STORM DRAIN INLET (TYPE I) DETAIL ON SHEET 4 INSTEAD.

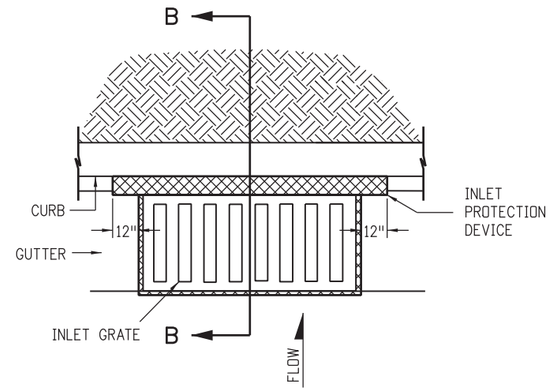

PLAN VIEW

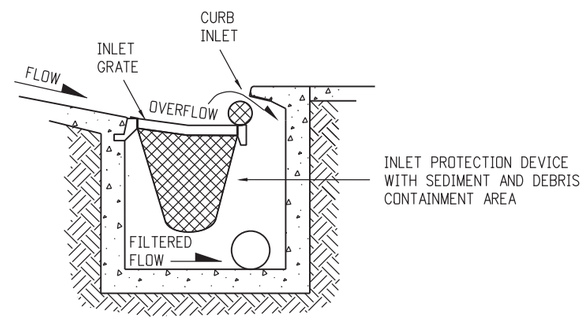

SECTION B-B

OPTION A

STORM DRAIN INLET PROTECTION (TYPE II)

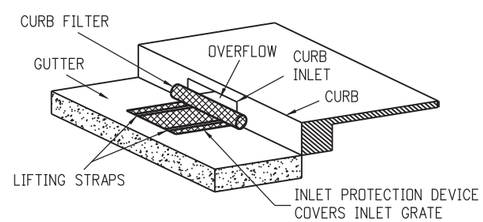

ISOMETRIC VIEW

OPTION B

STORM DRAIN INLET PROTECTION (TYPE II)

NOTE: THE PAY ITEM NUMBER FOR STORM DRAIN INLET PROTECTION (TYPE II) (EACH) IS 208-00052.

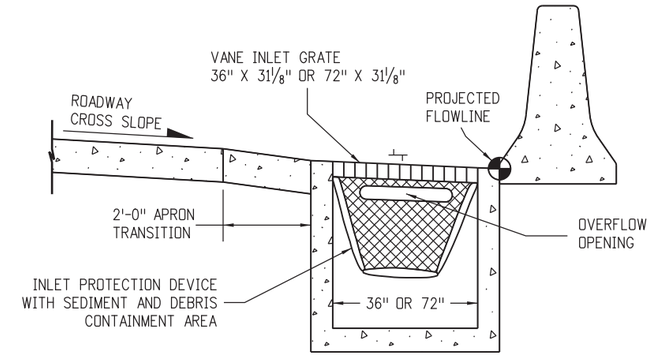

OPTION A

STORM DRAIN INLET PROTECTION (TYPE III)

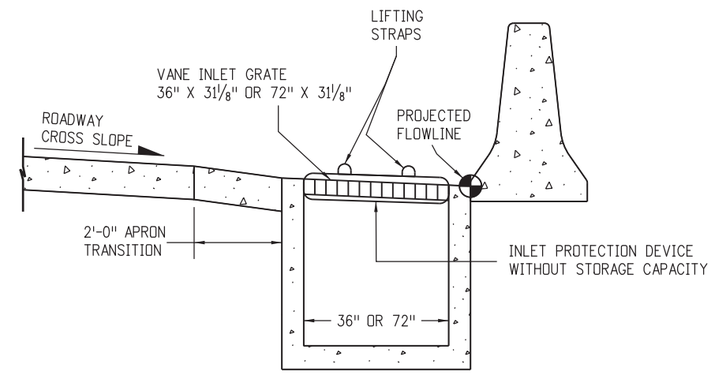

OPTION B

STORM DRAIN INLET PROTECTION (TYPE III)

NOTE: THE PAY ITEM NUMBER FOR STORM DRAIN INLET PROTECTION (TYPE III) (EACH) IS 208-00056.

STORM DRAIN INLET PROTECTION TYPES

Computer File Information		
Creation Date: 07/04/12	Initials: JBK	
Last Modification Date: 03/29/16	Initials: LTA	(R-X)
Full Path: www.coloradodot.info/business/designsupport		(R-X)
Drawing File Name: 2080105011.dgn		(R-X)
CAD Ver.: MicroStation V8 Scale: Not to Scale	Units: English	(R-X)

Sheet Revisions	
Date:	Comments
03/29/16	Added Note 3.

Colorado Department of Transportation
4201 East Arkansas Avenue
CDOT HQ, 4th Floor
Denver, CO 80222
Phone: 303-757-9021 FAX: 303-757-9868
Division of Project Support JBK/LTA

TEMPORARY EROSION CONTROL

Issued By: Project Development Branch on July 4, 2012

STANDARD PLAN NO.

M-208-1

Sheet No. 5 of 11

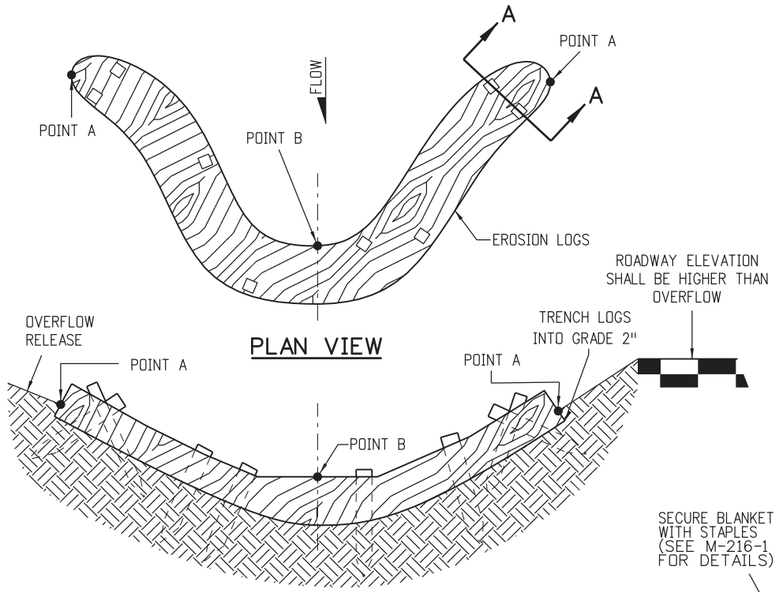

PLAN VIEW

NOTE: POINTS "A" SHALL BE A MINIMUM 4" HIGHER THAN POINT "B".

ELEVATION

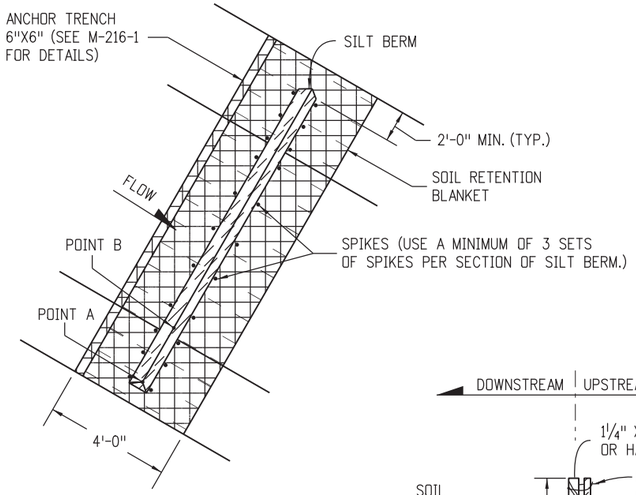

PLAN VIEW

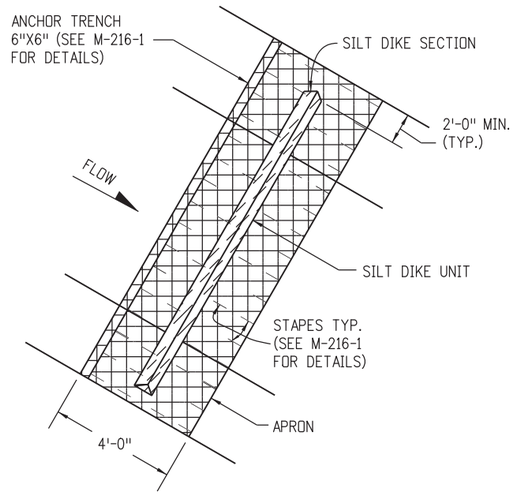

PLAN VIEW

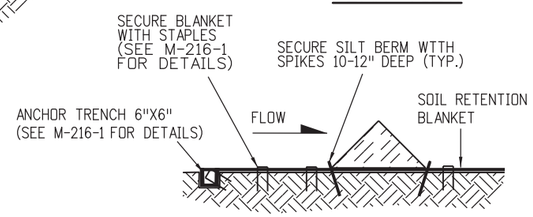

SILT BERM (1) SECTION VIEW

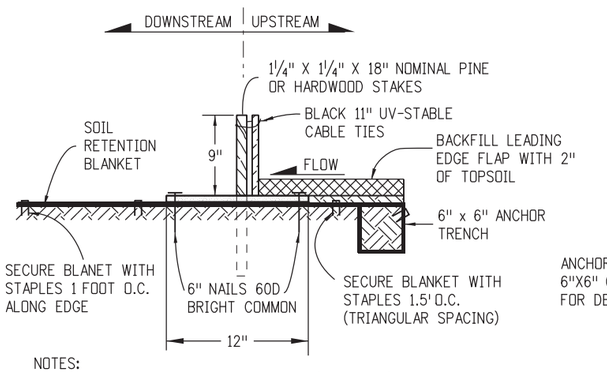

NOTES:
1. MINIMUM 4 NAILS PER SEGMENT (UPSTREAM).
2. MINIMUM 2 NAILS PER SEGMENT (DOWNSTREAM).

SILT BERM (2) SECTION VIEW

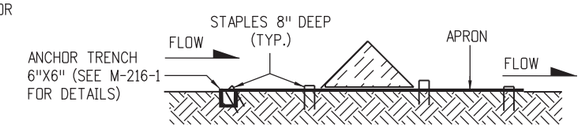

TYPICAL SECTION

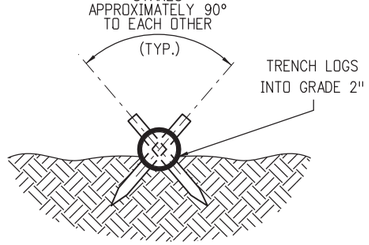

SECTION A-A

NOTES
1. EROSION LOGS SHALL BE EMBEDDED 2 INCHES INTO THE SOIL.
2. STAKES SHALL BE EMBEDDED TO A MINIMUM DEPTH OF 12 INCHES.
3. EROSION LOGS SHALL BE TIGHTLY ABUTTED WITH NO GAPS.
4. V-SHAPED TEMPORARY DITCHES SHALL NOT BE USED. DITCHES SHAL BE GRADED IN A PARABOLIC OR TRAPEZOIDAL SHAPE.

EROSION LOG INSTALLATION

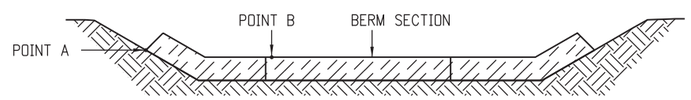

POINT "A" SHALL BE HIGHER THAN POINT "B" TO ENSURE THAT WATER FLOWS OVER THE BERM AND NOT AROUND THE ENDS.

FRONT VIEW

NOTES
1. ANCHOR SOIL RETENTION BLANKET INTO TRENCH WITH 8 INCHES MIN. STAPLES PLACED AT 1 FOOT INTERVALS ALONG EDGE.
2. FILL AND COMPACT TRENCH.
3. SECTIONS OF THE SILT BERM SHALL BE OVERLAPPED WITH NO GAPS.
4. FOR SLOPE AND CHANNEL SPACING SEE THE "SECTION VIEW ALONG DITCH FLOWLINE" DETAIL ON SHEET 11 OF 11.
5. SOIL RETENTION BLANKET SHALL ALWAYS BE REQUIRED.
6. THE PAY ITEM NUMBER FOR SILT BERM (LF) IS 208-00004.

SILT BERM INSTALLATION

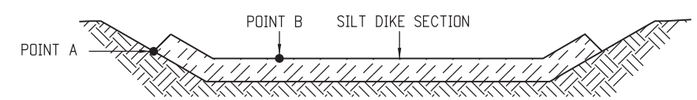

POINT "A" SHALL BE HIGHER THAN POINT "B" TO ENSURE THAT WATER FLOWS OVER THE DIKE AND NOT AROUND THE ENDS.

FRONT VIEW

NOTES
1. ANCHOR APRON INTO TRENCH WITH 8 INCH MINIMUM STAPLES PLACED AT 1 FOOT INTERVALS ALONG EDGE.
2. FILL AND COMPACT TRENCH.
3. THE APRON SHALL EXTEND A MINIMUM OF 2 FEET BEYOND EACH SIDE OF THE TRIANGLE.
4. FOR SLOPE AND CHANNEL SPACING SEE THE "SECTION VIEW ALONG DITCH FLOWLINE" DETAIL ON SHEET 11 OF 11.
5. THE PAY ITEM NUMBER FOR SILT DIKE (LF) IS 208-00001.

SILT DIKE INSTALLATION

DRAINAGE DITCH APPLICATIONS

Computer File Information		
Creation Date: 07/04/12	Initials: JBK	
Last Modification Date: 03/29/16	Initials: LTA	(R-X)
Full Path: www.coloradodot.info/business/designsupport		(R-X)
Drawing File Name: 2080106011.dgn		(R-X)
CAD Ver.: MicroStation V8 Scale: Not to Scale Units: English		(R-X)

Sheet Revisions	
Date:	Comments

Colorado Department of Transportation
4201 East Arkansas Avenue
CDOT HQ, 4th Floor
Denver, CO 80222
Phone: 303-757-9021 FAX: 303-757-9868
Division of Project Support JBK/LTA

TEMPORARY EROSION CONTROL

Issued By: Project Development Branch on July 4, 2012

STANDARD PLAN NO.

M-208-1

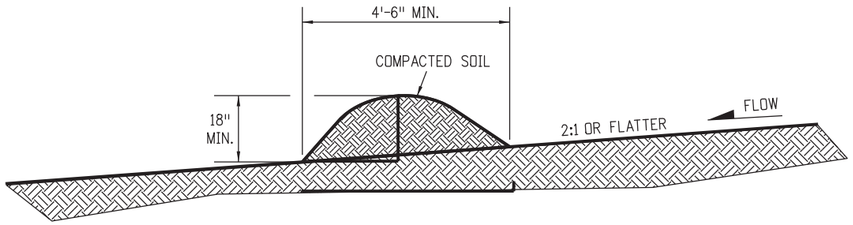

NOTES:

1. BERMS SHALL HAVE A HEIGHT OF 18 INCHES, SIDE SLOPES OF 2:1 OR FLATTER AND A MINIMUM BASE WIDTH OF 4'-6" FEET.
2. BERMS SHALL BE USED TO INTERCEPT AND DIVERT DRAINAGE TO A DESIGNATED OUTLET.
3. BERMS SHALL NOT BE USED WHERE DRAINAGE AREA EXCEEDS 10 ACRES.
4. BERMS SHALL BE CONSTRUCTED OUT OF MATERIAL COMPACTED WITH AT LEAST A MINIMUM OF ONE WHEEL ROLLED COMPACTION.
5. THE PAY ITEM NUMBER FOR TEMPORARY BERM (LF) IS 208-00300.
6. BERMS SHALL BE CONSTRUCTED OUT OF ACCEPTABLE MATERIAL THAT CAN BE COMPACTED AND RECEIVE AT A MINIMUM HEAVY EQUIPMENT WHEEL ROLLED COMPACTION.

TEMPORARY BERM

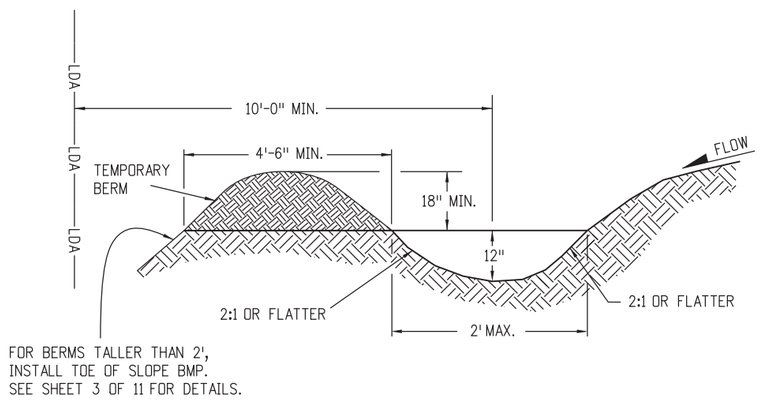

NOTES

1. TEMPORARY DIVERSION DITCHES SHALL BE CONSTRUCTED ACROSS THE SLOPE TO INTERCEPT RUNOFF AND DIRECT IT TO A STABLE OUTLET OR SEDIMENT TRAP.
2. USE THE TEMPORARY DIVERSION DITCH IMMEDIATELY ABOVE A NEW CUT, FILL SLOPE, OR AROUND THE PERIMETER OF A DISTURBED AREA.
3. THE GRADIENT ALONG THE FLOW PATH SHALL HAVE A POSITIVE GRADE TO ASSURE DRAINAGE, BUT SHALL NOT BE SO STEEP AS TO RESULT IN EROSION DUE TO HIGH VELOCITY.
4. THE DIVERSION FLOWLINE SHALL ALWAYS BE LOCATED A MINIMUM 10 FEET FROM THE OUTSIDE LIMITS OF DISTURBED AREA BOUNDARY.
5. THE PAY ITEM NUMBER FOR TEMPORARY DIVERSION (LF) IS 208-00301.

TEMPORARY DIVERSION

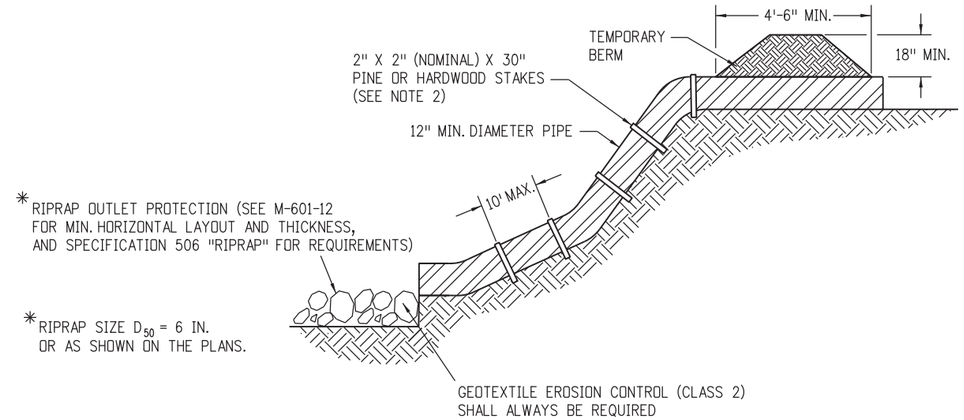

NOTES

1. ANCHOR SIZE VARIES ACCORDING TO PIPE SIZE
2. TO SECURE THE PIPE, DRIVE STAKES INTO GROUND, THEN TIE A 12 GUAGE WIRE BETWEEN THEM ABOVE AND ACROSS THE PIPE'S WIDTH.
3. THE OUTLET SHALL BE ALIGNED WITH THE FLOW DIRECTION OF THE EXISTING GRADE. PERPENDICULAR DISCHARGE TO A CHANNEL SHALL NOT BE ACCEPTABLE.
4. THE GRADE AROUND THE INLET TO THE PIPE SHALL BE COMPACTED.
5. THE PAY ITEM NUMBER FOR TEMPORARY SLOPE DRAINS (LF) IS 208-00060.

TEMPORARY SLOPE DRAINS

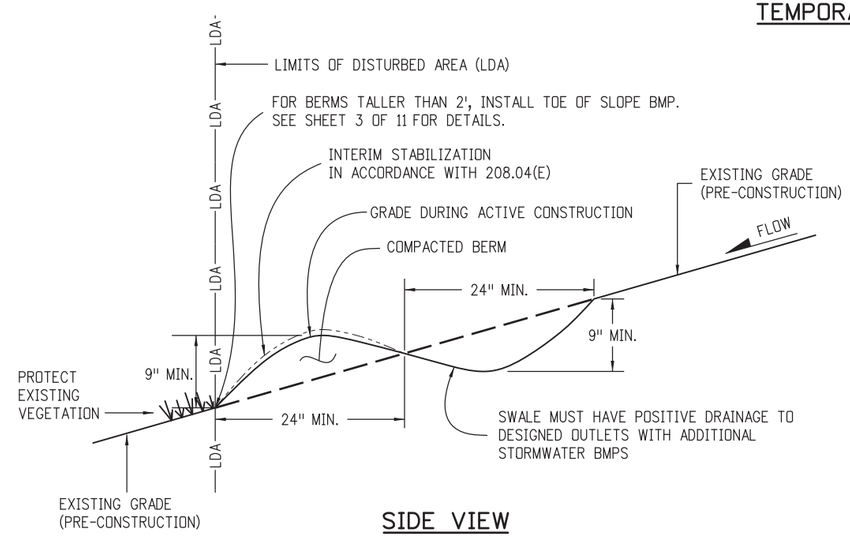

SIDE VIEW

NOTES:

1. BERMS CAN ONLY BE USED IF CONDITIONS ALLOW UNINTERRUPTED POSITIVE GRADE (MAXIMUM GRADIENT 3%) TO AN OUTLET PROTECTED WITH ADDITIONAL BMPS.
2. MAXIMUM DRAINAGE AREA FOR EACH OUTLET FROM THE SWALE SHALL BE LIMITED TO 2 ACRES.
3. CONTRACTOR SHALL SALVAGE TOPSOIL AND PLACE AFTER BERM IS REMOVED FOR FINAL SEEDING OF ALL DISTURBED AREAS.
4. ALL ACTIVITIES REQUIRED TO ACCOMPLISH TEMPORARY BERM (EXCLUDING SURFACE MULCHING) SHALL BE INCLUDED IN THE COST OF WORK AND WILL NOT BE PAID FOR SEPARATELY.
5. BERMS SHALL BE CONSTRUCTED OUT OF ACCEPTABLE MATERIAL THAT CAN BE COMPACTED AND RECEIVE AT A MINIMUM HEAVY EQUIPMENT WHEEL ROLLED COMPACTION.
6. THE PAY ITEM NUMBER FOR TEMPORARY BERM (LF) IS 208-00300.

TEMPORARY BERM (AT EDGE OF DISTURBANCE)

GRADING APPLICATIONS

Computer File Information		
Creation Date: 07/04/12	Initials: JBK	
Last Modification Date: 03/29/16	Initials: LTA	(R-X)
Full Path: www.coloradodot.info/business/designsupport		(R-X)
Drawing File Name: 2080107011.dgn		(R-X)
CAD Ver.: MicroStation V8 Scale: Not to Scale Units: English		(R-X)

Sheet Revisions	
Date:	Comments
03/29/16	Revisions to some dimensions and Notes.

Colorado Department of Transportation
4201 East Arkansas Avenue
CDOT HQ, 4th Floor
Denver, CO 80222
Phone: 303-757-9021 FAX: 303-757-9868
Division of Project Support JBK/LTA

TEMPORARY EROSION CONTROL

Issued By: Project Development Branch on July 4, 2012

STANDARD PLAN NO.

M-208-1

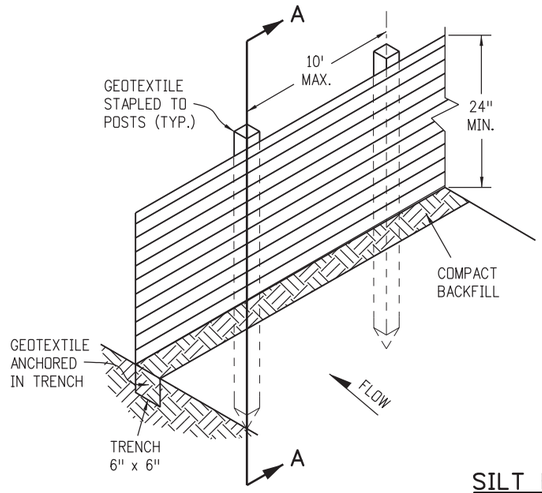

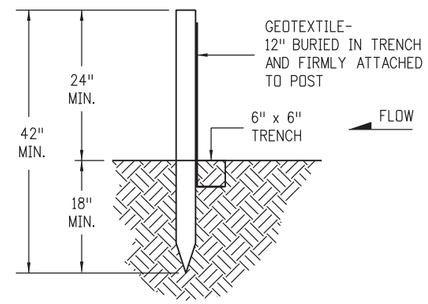

SECTION A-A

SILT FENCE

NOTES

1. GEOTEXTILE SHALL BE ATTACHED TO WOOD POSTS WITH THREE OR MORE STAPLES PER POST. STAPLES SHALL BE HEAVY DUTY WIRE AND AT LEAST 1" INCH LONG
2. WOOD POST SHALL BE 1½" X 1½" NOMINAL.
3. THE PAY ITEM NUMBER FOR SILT FENCE (LF) IS 208-00020.
4. THE SILT FENCE SHALL BE PLACED ON THE CONTOUR (AT THE SAME ELEVATION ±6"). THE ENDS SHALL BE FLARED UP SLOPE (MINIMUM ELEVATION GAIN OF 18").

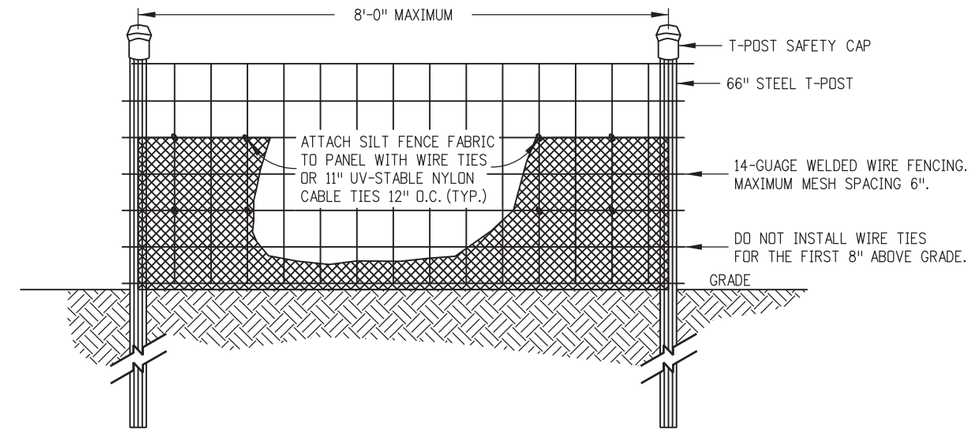

ELEVATION VIEW

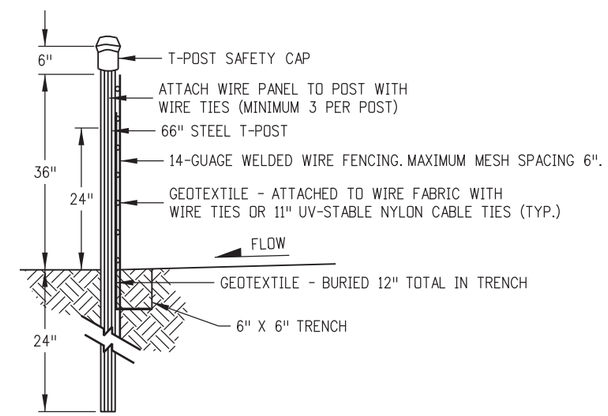

SIDE VIEW

NOTES

1. THE ENDS OF THE SILT FENCE FABRIC SHALL BE JOINED TOGETHER BY WRAPPING APPROX. 6 INCHES OF EACH END AROUND A WOODEN POST ONE FULL TURN, THEN SECURED ALONG THE POST WITH 6 HEAVY DUTY WIRE STAPLES AT LEAST 1 INCH LONG.
2. SILT FENCES SHALL NOT BE USED FOR CHECK DAMS.
3. THE PAY ITEM NUMBER FOR SILT FENCE (REINFORCED) (LF) IS 208-00021.

SILT FENCE (REINFORCED)

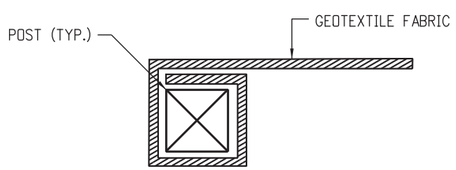

END SECTION DETAIL (PLAN VIEW)

NOTE

1. THE END OF THE SILT FENCE FABRIC SHALL BE WRAPPED APPROX. 6 INCHES AROUND A WOODEN POST ONE FULL TURN, THEN SECURED ALONG THE POST WITH 6 HEAVY DUTY WIRE STAPLES AT LEAST 1 INCH LONG.

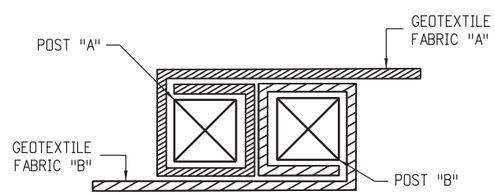

JOINING SECTION DETAIL (PLAN VIEW)

NOTES

1. THE ENDS OF THE SILT FENCE FABRIC SHALL BE JOINED TOGETHER BY WRAPPING APPROX. 6 INCHES OF EACH END AROUND A WOODEN POST ONE FULL TURN, THEN SECURED ALONG THE POST WITH 6 HEAVY DUTY WIRE STAPLES AT LEAST 1 INCH LONG.
2. POSTS SHALL BE TIGHTLY ABUTTED WITH NO GAPS TO PREVENT POTENTIAL FLOW-THROUGH OF SEDIMENT AT JOINT.

SILT FENCE APPLICATIONS

Computer File Information		
Creation Date: 07/04/12	Initials: JBK	
Last Modification Date: 03/29/16	Initials: LTA	(R-X)
Full Path: www.coloradodot.info/business/designsupport		(R-X)
Drawing File Name: 2080108011.dgn		(R-X)
CAD Ver.: MicroStation V8 Scale: Not to Scale Units: English		(R-X)

Sheet Revisions	
Date:	Comments
03/29/16	Minor revisions to some dimensions and Notes.

Colorado Department of Transportation
4201 East Arkansas Avenue
CDOT HQ, 4th Floor
Denver, CO 80222
Phone: 303-757-9021 FAX: 303-757-9868
Division of Project Support JBK/LTA

TEMPORARY EROSION CONTROL

Issued By: Project Development Branch on July 4, 2012

STANDARD PLAN NO.

M-208-1

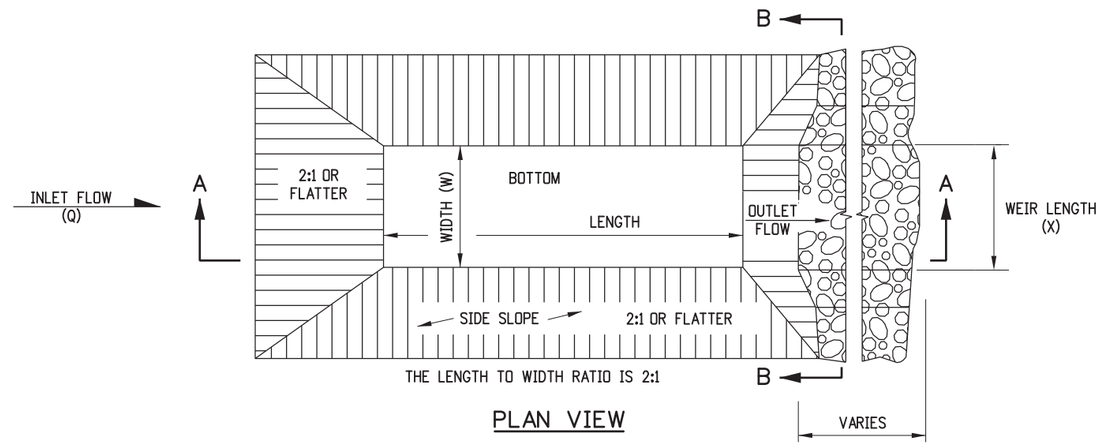

PLAN VIEW

NOTES

1. THE MAXIMUM DRAINAGE AREA IS 5 ACRES.
2. THE MAXIMUM STRUCTURE LIFE IS 2 YEARS.
3. THE STORAGE AREA IS 1800 CUBIC FEET PER ACRE.
4. THE MAXIMUM EMBANKMENT HEIGHT SHALL BE 5 FT. MEASURED ON THE DOWNSTREAM SIDE.
5. THE LENGTH/WIDTH RATIO MAY BE ADJUSTED TO MEET SITE CONDITIONS WHEN APPROVED BY THE ENGINEER.
6. WIDTH (W) OF SEDIMENT TRAP IS APPROXIMATELY EQUAL TO THE WEIR LENGTH (X).
7. SEDIMENT TRAP DESIGN SHALL BE APPROVED BY THE ENGINEER.
8. THE DOWN GRADE FROM WEIR SHALL BE STABLE AND NON-ERODIABLE.
9. THE PAY ITEM NUMBER FOR SEDIMENT TRAP (LF) IS 208-00033.

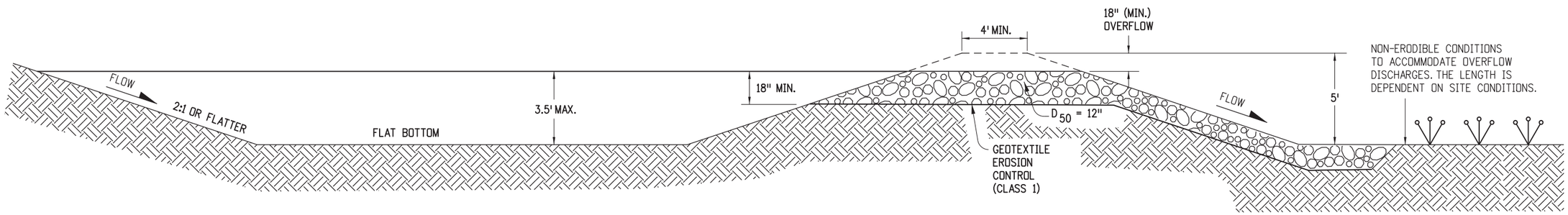

SECTION A-A

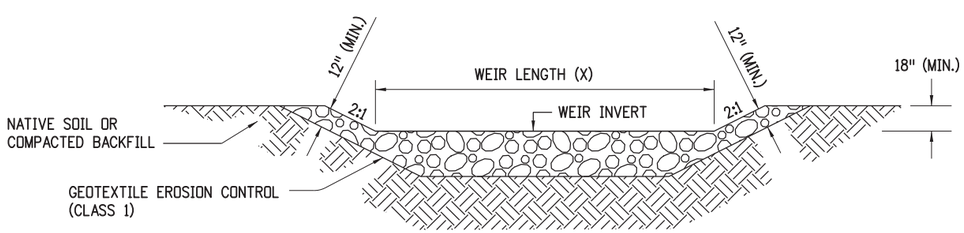

SECTION B-B

DRAINAGE AREA (ACRES)	WEIR LENGTH (FEET)
1	4
2	6
3	8
4	10
5	12

WEIR LENGTH TABLE

SEDIMENT TRAP

Computer File Information	
Creation Date: 07/04/12 Initials: JBK	
Last Modification Date: 03/29/16 Initials: LTA	(R-X)
Full Path: www.coloradodot.info/business/designsupport	(R-X)
Drawing File Name: 2080109010.dgn	(R-X)
CAD Ver.: MicroStation V8 Scale: Not to Scale Units: English	(R-X)

Sheet Revisions	
Date:	Comments
03/29/16	Minor revisions to some dimensions.

Colorado Department of Transportation
4201 East Arkansas Avenue
CDOT HQ, 4th Floor
Denver, CO 80222
Phone: 303-757-9021 FAX: 303-757-9868
Division of Project Support JBK/LTA

TEMPORARY EROSION CONTROL

Issued By: Project Development Branch on July 4, 2012

STANDARD PLAN NO.

M-208-1

NOTES

1. STAKES SHALL BE WOOD AND SHALL BE 2" X 2" X 30" NOMINAL.
2. EROSION BALES SHALL BE 18" X 18" X 36".
3. EROSION BALES SHALL BE ENTRENCHED 4 IN. MINIMUM INTO THE SOIL, THIGHTLY ABUTTED WITH NO GAPS, STAKED, AND BACKFILLED AROUND THE ENTIRE OUTSIDE PERIMETER.
4. EROSION BALES CANNOT BE USED FOR CHECK DAMS.
5. THE PAY ITEM NUMBER FOR EROSION BALES (WEED FREE) (EA) IS 208-00011.

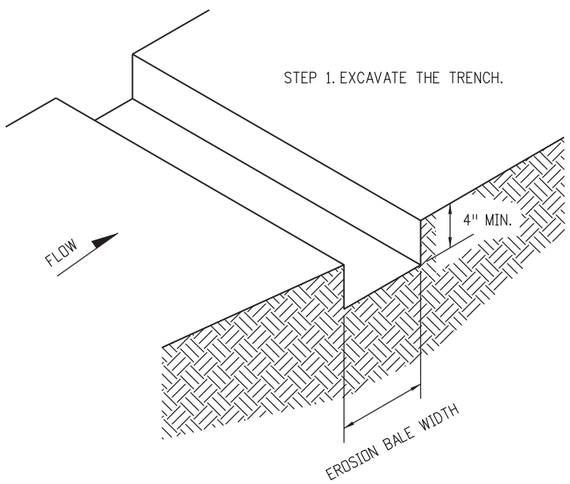

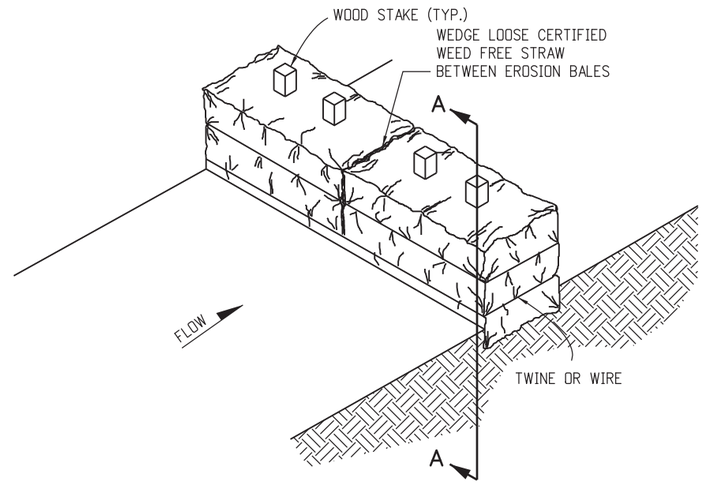

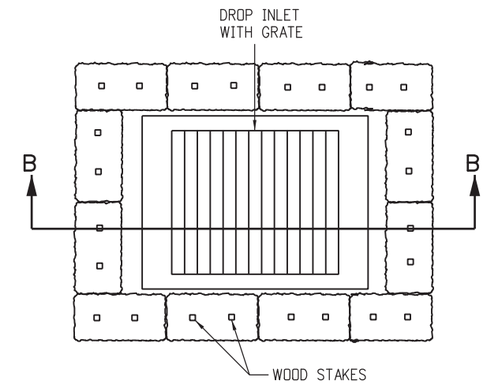

PLAN VIEW

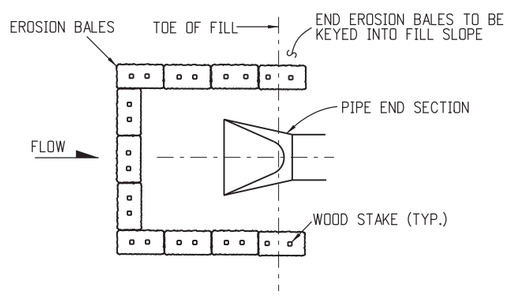

PLAN VIEW

EROSION BALE CULVERT INLET PROTECTION

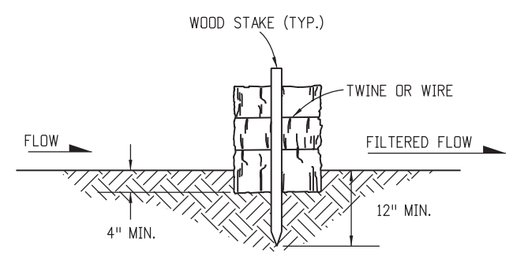

SECTION A-A

EROSION BALE TRENCHING AND STAKING

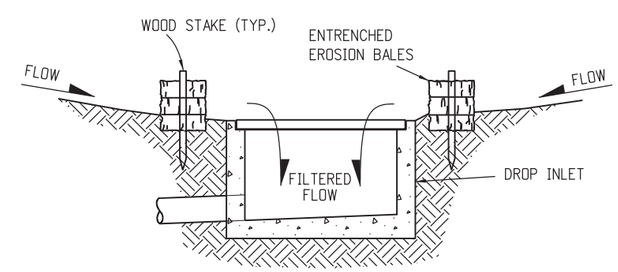

SECTION B-B

EROSION BALE FILTER AT DROP INLET

EROSION BALE APPLICATIONS

Computer File Information		
Creation Date: 07/04/12	Initials: JBK	
Last Modification Date: 03/29/16	Initials: LTA	(R-X)
Full Path: www.coloradodot.info/business/designsupport		(R-X)
Drawing File Name: 20801010011.dgn		(R-X)
CAD Ver.: MicroStation V8 Scale: Not to Scale Units: English		(R-X)

Sheet Revisions	
Date:	Comments
03/29/16	Minor revisions to some dimensions.

Colorado Department of Transportation
4201 East Arkansas Avenue
CDOT HQ, 4th Floor
Denver, CO 80222
Phone: 303-757-9021 FAX: 303-757-9868
Division of Project Support JBK/LTA

TEMPORARY EROSION CONTROL

Issued By: Project Development Branch on July 4, 2012

STANDARD PLAN NO.

M-208-1

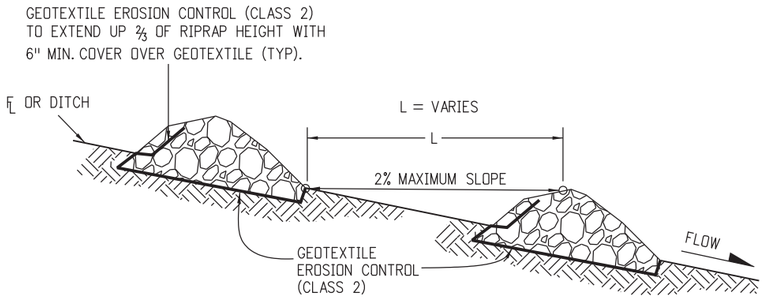

SECTION VIEW ALONG DITCH FLOWLINE

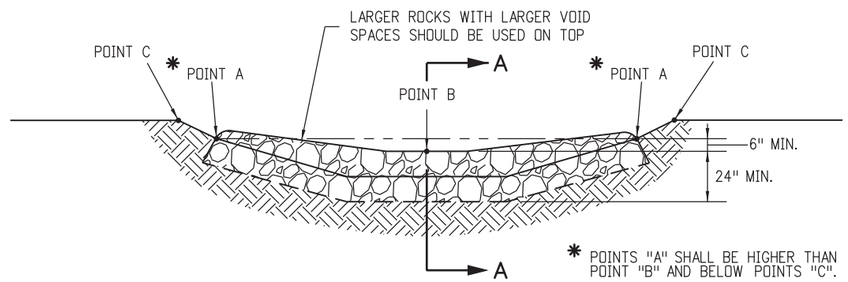

TYPICAL SECTION VIEW

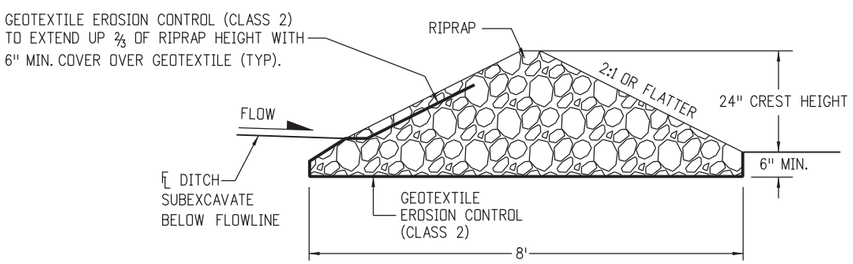

SECTION A-A

NOTES:

1. RIPRAP SIZE D_{50} = 6" OR AS SHOWN ON THE PLANS.
2. THE GEOTEXTILE EROSION CONTROL SHALL BE CLASS 2 AND CONFORM TO THE REQUIREMENTS OF SUBSECTION 712.08.
3. THE ENDS OF RIPRAP CHECK DAM SHALL BE A MINIMUM OF 6 IN. HIGHER THAN CENTER OF CHECK DAM.
4. FOR USE AS TEMPORARY CHECK DAMS ONLY AND NOT FOR PERMANENT INSTALLATIONS.
5. THE PAY ITEM NUMBER FOR ROCK CHECK DAM (EA) IS 208-00041.

ROCK CHECK DAM

Computer File Information	
Creation Date: 07/04/12 Initials: JBK	
Last Modification Date: 03/29/16 Initials: LTA	(R-X)
Full Path: www.coloradodot.info/business/designsupport	(R-X)
Drawing File Name: 20801011011.dgn	(R-X)
CAD Ver.: MicroStation V8 Scale: Not to Scale Units: English	(R-X)

Sheet Revisions	
Date:	Comments
03/29/16	Minor revisions to some Notes.

Colorado Department of Transportation
4201 East Arkansas Avenue
CDOT HQ, 4th Floor
Denver, CO 80222
Phone: 303-757-9021 FAX: 303-757-9868
Division of Project Support JBK/LTA

TEMPORARY EROSION CONTROL

Issued By: Project Development Branch on July 4, 2012

STANDARD PLAN NO.

M-208-1

Sheet No. 11 of 11

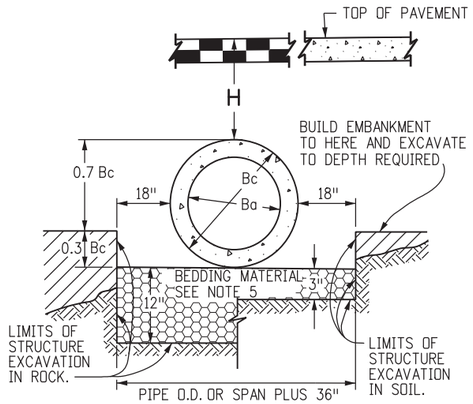

NOTE: Bc IS THE OUTSIDE DIMENSION FOR DIAMETER, SPAN OR RISE.

PIPE INSTALLATION

(WITH 0.7 PROJECTION RATIO)

CIRCULAR (CIR)			VERTICAL ELLIPTICAL (VE)				HORIZONTAL ELLIPTICAL (HE)			
△ PIPE SIZE= *Ba* (INSIDE DIA)	WALL THICKNESS	0.3 *Bc* (OUTSIDE DIA)	SPAN	RISE	WALL THICKNESS	0.3 OUTSIDE RISE	SPAN	RISE	WALL THICKNESS	0.3 OUTSIDE RISE
IN.		FT.	IN.			FT.	IN.			FT.
12	2	0.40								
15	2-1/4	0.49								
18	2-1/2	0.58					23	14	2-3/4	0.49
21	2-3/4	0.66								
24	3	0.75					30	19	3-1/4	0.66
27	3-1/4	0.84					34	22	3-1/2	0.73
30	3-1/2	0.92					38	24	3-3/4	0.79
33	3-3/4	1.01								
36	4	1.10	29	45	4-1/2	1.35	45	29	4-1/2	0.95
42	4-1/2	1.28	34	53	5	1.58	53	34	5	1.10
48	5	1.45	38	60	5-1/2	1.78	60	38	5-1/2	1.23
54	5-1/2	1.62	43	68	6	2.00	68	43	6	1.38
60	6	1.80	48	76	6-1/2	2.23	76	48	6-1/2	1.53
66	6-1/2	1.97	53	83	7	2.43	83	53	7	1.68
72	7	2.15	58	91	7-1/2	2.65	91	58	7-1/2	1.83
78	7-1/2	2.32	63	98	8	2.85	98	63	8	1.98
84	8	2.50	68	106	8-1/2	3.08	106	68	8-1/2	2.13
90	8-1/2	2.68	72	113	9	3.28	113	72	9	2.25
96	9	2.85	77	121	9-1/2	3.50	121	77	9-1/2	2.40
102	9-1/2	3.02	82	128	9-3/4	3.69	128	82	9-3/4	2.54
108	10	3.20	87	136	10	3.90	136	87	10	2.68

△ ALSO EQUIVALENT ROUND DIMENSION FOR ELLIPTICAL PIPE.

DIMENSIONS FOR REINFORCED CONCRETE PIPE

(FOR INFORMATION ONLY)

GENERAL NOTES

REINFORCED CONCRETE PIPE

1. FILL HEIGHTS GREATER THAN MAXIMUM ALLOWED IN THE HEIGHTS OF FILL TABLE ON THIS SHEET REQUIRE SPECIAL DESIGN OF STRUCTURE.
2. PIPE DESIGN IS BASED ON SAFETY FACTOR OF 1.33 ON ULTIMATE STRENGTH.
3. THE HEIGHTS OF FILL OVER TOP OF PIPE ARE BASED ON UNIT WEIGHT OF SOIL AT 135 LBS. PER CUBIC FT.
4. PIPE CLASS IS DETERMINED FROM 0.01 IN. CRACK D-LOAD.
5. BEDDING IS CLASS B (MODIFIED) (FROM CONCRETE PIPE DESIGN MANUAL-AMERICAN CONCRETE PIPE ASSOCIATION) WITH SETTLEMENT RATIO R = 0.0 sd (YIELDING BED). BEDDING MATERIAL FOR RIGID PIPE IN SOIL SHALL BE 3 IN. LOOSE THICKNESS STRUCTURE BACKFILL CLASS 2. BEDDING MATERIAL FOR RIGID PIPE IN ROCK SHALL BE 12 IN. LOOSE THICKNESS STRUCTURE BACKFILL CLASS 1.
6. CHANGES IN DESIGN FACTORS REQUIRE COMPENSATING CHANGES IN PIPE DESIGN.
7. MINIMUM WALL THICKNESS DIMENSIONS ARE BASED ON AASHTO M 170 (WALL B) FOR CIRCULAR PIPE, AND AASHTO M 207 FOR ELLIPTICAL PIPE.
8. SPACING FOR MULTIPLE PIPE INSTALLATIONS SHALL CONFORM TO THE DETAILS SHOWN ON STANDARD PLAN M-206-1.
9. WHEN A PIPE IS TO BE EXTENDED, THE SAME PIPE MATERIAL AND SIZE AS IN THE ORIGINAL PIPE INSTALLATION SHALL BE USED.

NONREINFORCED CONCRETE PIPE

1. AT THE OPTION OF THE CONTRACTOR, NONREINFORCED CONCRETE PIPE CONFORMING TO AASHTO M 86 MAY BE USED IN LIEU OF REINFORCED CONCRETE PIPE FOR ALL SIZES 36 INCHES IN DIAMETER AND SMALLER. THE NONREINFORCED CONCRETE PIPE SHALL MEET THE SAME D-LOAD TO PRODUCE THE ULTIMATE LOAD UNDER THE THREE-EDGE BEARING METHOD AS SPECIFIED FOR REINFORCED CONCRETE PIPE IN CONFORMANCE WITH AASHTO M 170. THE CONTRACTOR SHALL PROVIDE WRITTEN CERTIFICATION OF CONFORMACE. THE WALL THICKNESS OF THE NONREINFORCED PIPE MAY BE INCREASED AS REQUIRED TO MEET D-LOAD REQUIREMENT.
2. ALL REQUIREMENTS FOR REINFORCED CONCRETE PIPE, EXCEPT THOSE REFERRING TO REINFORCEMENT, SHALL APPLY TO NONREINFORCED CONCRETE PIPE.

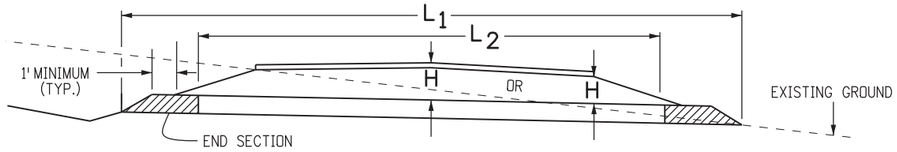

CONCRETE PIPE WITH END SECTIONS

NOTE: USE THE H THAT IS GREATER FOR MAXIMUM ALLOWABLE FILL HEIGHT.

H = HEIGHT OF FILL OVER TOP OF PIPE, INCLUDING PAVEMENT THICKNESS.

L_1 = LENGTH OF PIPE TO BE MEASURED WHEN PLACED IN ACCORDANCE WITH SECTION 624.

L_2 = LENGTH OF PIPE TO BE MEASURED WHEN PLACED IN ACCORDANCE WITH SECTION 603.

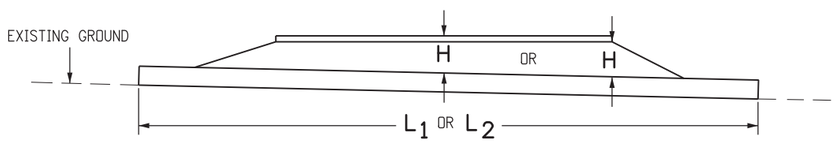

CONCRETE PIPE WITHOUT END SECTIONS

NOTE: USE THE H THAT IS GREATER FOR MAXIMUM ALLOWABLE FILL HEIGHT.

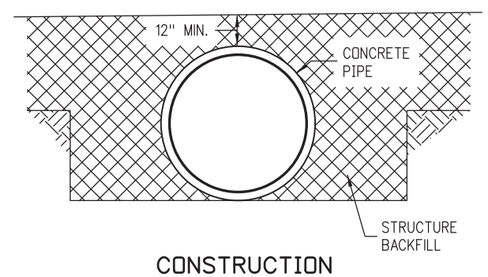

CONSTRUCTION MINIMUM COVER FOR RIGID PIPE

TYPE OF PIPE	HEIGHT OF FILL OVER TOP OF PIPE, H (FEET)				
	CLASS OF PIPE (0.01 IN. CRACK D-LOAD)				
	CLASS CIR II CLASS VE II CLASS HE II 1000 D	CLASS CIR III CLASS VE III CLASS HE III 1350 D	CLASS CIR IV CLASS VE IV CLASS HE IV 2000 D	CLASS CIR V CLASS VE V ——— 3000 D	——— CLASS VE VI ——— 4000 D
CIRCULAR (CIR)	1 TO 18	1 TO 25	± 25 TO 37	± 37 TO 45	
VERTICAL ELLIPTICAL (VE)	1 TO 18	1 TO 25	± 25 TO 37	± 37 TO 45	± 45 TO 62
HORIZONTAL ELLIPTICAL (HE)	1 TO 18	1 TO 25	± 25 TO 37		

ALLOWABLE RANGE OF HEIGHTS FOR FILL OVER REINFORCED CONCRETE PIPE

(ALL SIZES)

Computer File Information	
Creation Date: 07/04/12	Initials: DLM
Last Modification Date: 10/02/14	Initials: LTA
Full Path: www.coloradodot.info/business/designsupport	
Drawing File Name: 603020101.dgn	
CAD Ver.: MicroStation V8 Scale: Not to Scale Units: English	

	Sheet Revisions	
	Date:	Comments
(R-X)	3/25/14	Made Min. Cover for Rigid Pipe detail like others. Deleted Gen Note 1 & renumbered.
(R-X)	4/11/14	Changed "Min." to 1 in Heights table.
(R-X)		
(R-X)		

Colorado Department of Transportation
4201 East Arkansas Avenue
CDOT HQ, 4th Floor
Denver, CO 80222
Phone: 303-757-9021 FAX: 303-757-9868
Division of Project Support DLM/LTA

REINFORCED CONCRETE PIPE

Issued By: Project Development Branch on July 4, 2012

STANDARD PLAN NO.

M-603-2

Sheet No. 1 of 1

- PEDESTRIAN PUSH BUTTON POST ASSEMBLY (PPBPA).
SEE NOTE 8.
SEE STANDARD PLAN S-614-9 FOR PPBPA DETAILS.
SEE PLANS FOR LOCATIONS.
THE SIGN FACE SHALL BE PARALLEL TO THE CROSSWALK.

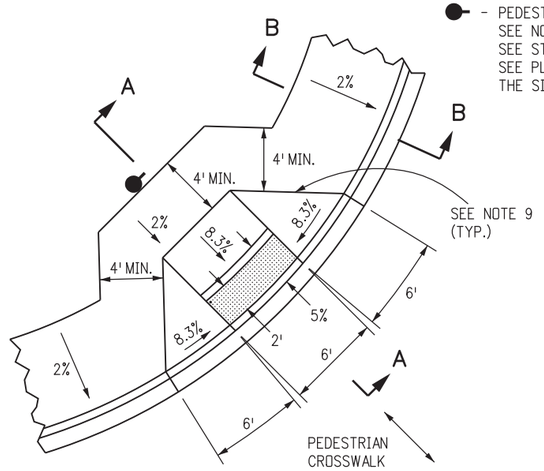

CURB RAMP TYPE 1A

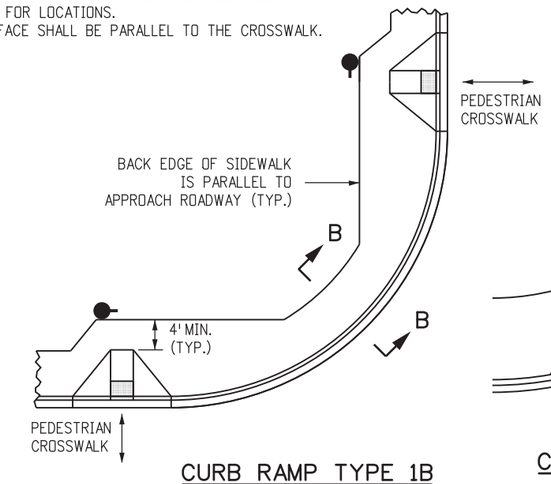

CURB RAMP TYPE 1B

SEE NOTE 11

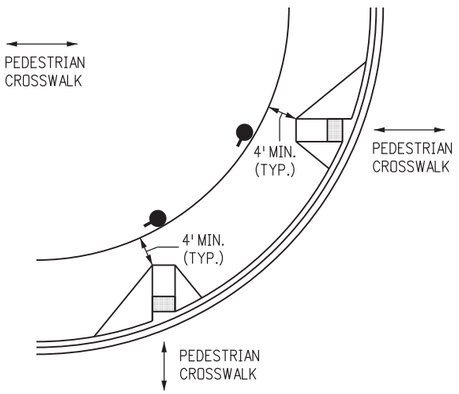

CURB RAMP TYPE 1B MODIFIED

USE ONLY IF EXISTING ROW DICTATES.
GRADE BREAKS SHALL NOT BE PERMITTED ON THE SURFACE OF THE RAMP RUNS AND TURNING SPACES.
SURFACE SLOPES THAT MEET AT GRADE BREAKS SHALL BE FLUSH.
SEE NOTE 11.

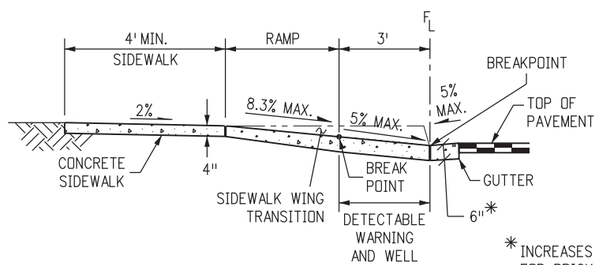

* INCREASES TO 8" FOR BRICK PAVERS.

SECTION A-A

(PPBPA NOT SHOWN IN SECTION VIEWS AS IT MAY NOT BE REQUIRED.)

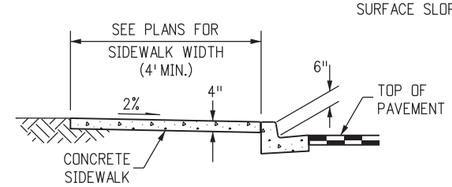

SECTION B-B

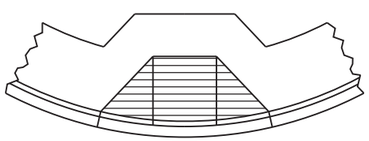

RAMP PAY AREA

FOR CURB RAMPS
TYPES 1A AND 1B

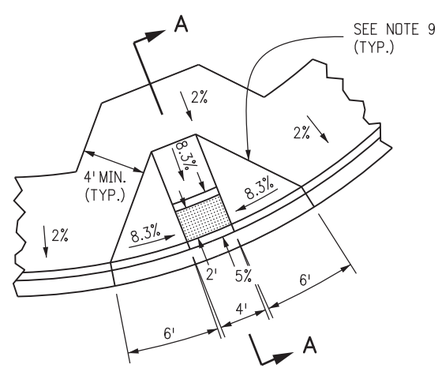

RAMP DETAIL

FOR CURB RAMP
TYPE 1B

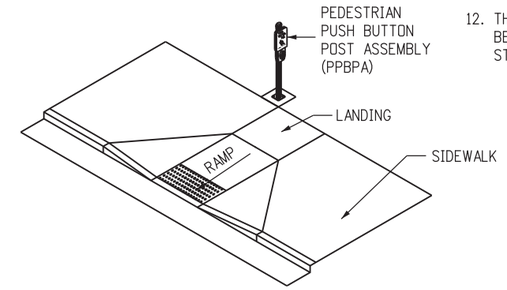

CURB RAMP WITH PEDESTRIAN PUSH BUTTTON POST

GENERAL NOTES

1. THE DETECTABLE WARNINGS SHALL BE INSTALLED AT SIDEWALK TO STREET TRANSITIONS. THEY SHALL HAVE A TRUNCATED DOME SURFACE. THE DOMES SHALL BE IN A SQUARE GRID PATTERN.
2. ALL DETECTABLE WARNING AREAS SHALL START A MINIMUM OF 6 IN. FROM THE FLOW LINE OF THE CURB AND NOT BE MORE THAN A MAXIMUM OF 8 IN. (WITH EXCEPTION FOR THE TYPE 1B MODIFIED AND TYPE 3B MODIFIED AS THIS DIMENSION MAY BE GREATER THAN 8 INCHES ON ONE SIDE OF THE RADIUS) FROM ANY POINT ON THE FLOW LINE OF THE CURB. ALL DETECTABLE WARNING AREAS SHALL BE 2 FT. IN LENGTH AND COVER THE COMPLETE WIDTH OF THE RAMP AREA ONLY.
3. RAMP SLOPES SHALL BE 8.3% OR FLATTER. THE DETECTABLE WARNING SLOPES SHALL BE 5% OR FLATTER.
4. MINIMUM SIDEWALK WIDTH IS 4 FT.
5. DO NOT INSTALL DRAINAGE STRUCTURES, TRAFFIC SIGNAL EQUIPMENT, JUNCTION BOXES, AND OTHER OBSTRUCTIONS IN FRONT OF THE RAMP ACCESS AREAS.
6. CONSTRUCTION OF THE CONCRETE PEDESTRIAN CURB ADJACENT TO THE RAMP AREAS SHALL BE INCLUDED IN THE BID PRICE OF THE CONCRETE CURB RAMP.
7. DETECTABLE WARNINGS SHALL MEET SECTION 705 OF THE USDOT ADA STANDARDS FOR TRANSPORTATION FACILITIES.
8. IF THE PLACEMENT OF A PEDESTRIAN PUSH BUTTON ASSEMBLY ON A TRAFFIC SIGNAL MAST POLE WILL NOT BE WITHIN EASY REACH (10" OR LESS AND UNOBSTRUCTED) OF PEDESTRIANS (IN ACCORDANCE WITH THE AMERICANS WITH DISABILITIES ACT), THEN A SEPERATE PEDESTRIAN PUSH BUTTON POST ASSEMBLY (PPBPA) SHALL BE INSTALLED WITHIN EASY REACH. THE PPBPA SHALL MEET THE PROVISIONS FOUND IN "SECTION 4E.08 THROUGH 4E.13 - PEDESTRIAN DETECTORS" OF THE 2009 MUTCD MANUAL WITH REVISIONS 1 AND 2.
9. WHERE SPACE IS LIMITED OR GRADE IS AN ISSUE, A 10% SLOPE MAY BE USED ON FLARED SIDES.
10. THE SLOPES CAN BE LOWER THAN WHAT IS SHOWN BUT THEY SHALL NOT EXCEED THESE VALUES.
11. CURB RAMP TYPE 1A DIAGONAL (ON THE APEX) IS UNACCEPTABLE IN NEW CONSTRUCTION. TYPICALLY, TWO CURB RAMPS AS IN TYPE 1B, MUST BE PROVIDED AT EACH STREET CORNER.
    ADA TITLE II 28 C.F.R. SECTION 35.151(B) STATES:
    ALTERATIONS HAVE TO BE MADE READILY ACCESSIBLE, WITHIN THE IMPACTING PROJECT, TO THE MAXIMUM EXTENT FEASIBLE (MEF).
    THEREFORE, A SINGLE, DIAGONAL CURB RAMP TYPE 1A WILL ONLY BE PERMITTED ON ALTERATION PROJECTS WITH MEF JUSTIFICATION DOCUMENTATION IN ACCORDANCE TO CDOT PROCEDURAL DIRECTIVE 605.1 AND IN COORDINATION WITH THE ADA TITLE II COORDINATOR.
12. THE CURB RAMP (EXCLUDING ANY FLARED SIDES) OR BLENDED TRANSITION SHALL BE CONTAINED WHOLLY WITHIN THE WIDTH OF THE CROSSWALK AND/OR PEDESTRIAN STREET CROSSING THE RAMP SERVES.

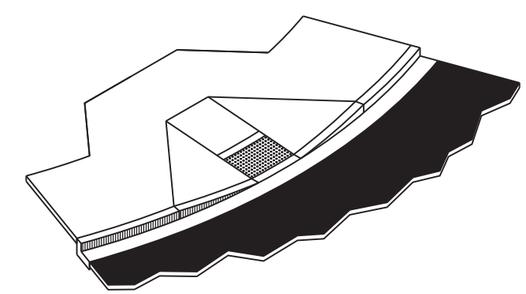

ISOMETRIC VIEW

Computer File Information		
Creation Date: 07/04/12	Initials: DLM	
Last Modification Date: 05/06/14	Initials: LTA	R-X
Full Path: www.coloradodot.info/business/designsupport		R-X
Drawing File Name: 608010107.dgn		R-X
CAD Ver.: MicroStation V8 Scale: Not to Scale Units: English		R-X

Sheet Revisions	
Date:	Comments

Colorado Department of Transportation
4201 East Arkansas Avenue
CDOT HQ, 4th Floor
Denver, CO 80222
Phone: 303-757-9021 FAX: 303-757-9868
Division of Project Support DLM/LTA

CURB RAMPS

Issued By: Project Development Branch on July 4, 2012

STANDARD PLAN NO.
M-608-1
Sheet No. 1 of 7

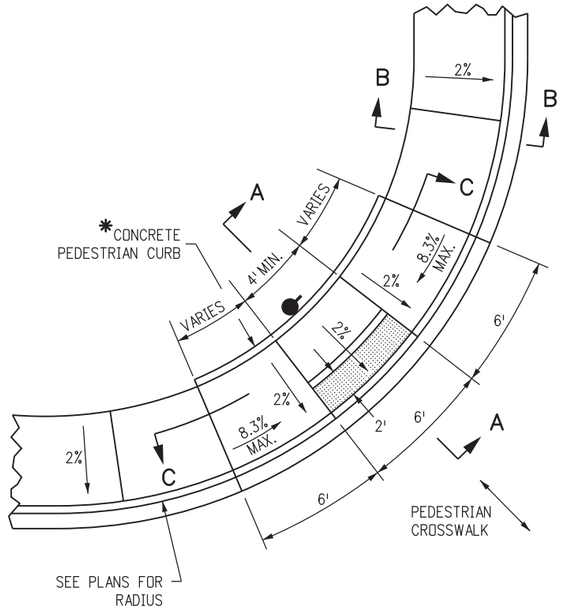

CURB RAMP TYPE 2A

SEE NOTE 3.

● - PEDESTRIAN PUSH BUTTON POST ASSEMBLY (PPBPA).
SEE NOTE 8 ON SHEET 1 OF 7.
SEE STANDARD PLAN S-614-9 FOR PPBPA DETAILS.
SEE PLANS FOR LOCATIONS.
THE SIGN FACE SHALL BE PARALLEL TO THE CROSSWALK.

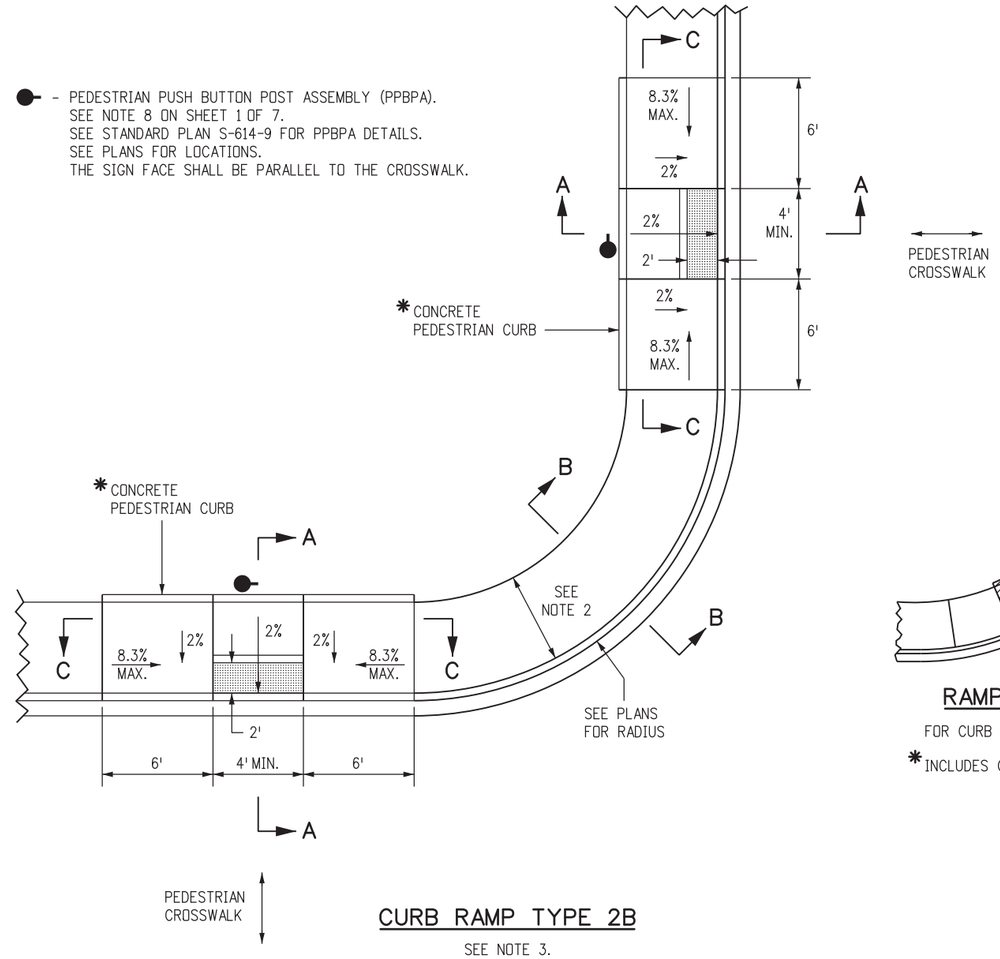

CURB RAMP TYPE 2B

SEE NOTE 3.

NOTES

1. CURB RAMP TYPE 2A MAY BE USED IN MID-BLOCK.
2. SEE PLANS FOR SIDEWALK WIDTH. THE MINIMUM SIDEWALK WIDTH IS 4 FT.
3. CURB RAMP TYPE 2A DIAGONAL (ON THE APEX) IS UNACCEPTABLE IN NEW CONSTRUCTION. TYPICALLY, TWO CURB RAMPS AS IN TYPE 2B, MUST BE PROVIDED AT EACH STREET CORNER.
   ADA TITLE II 28 C.F.R. SECTION 35.151(B) STATES:
   ALTERATIONS HAVE TO BE MADE READILYACCESSIBLE, WITHIN THE IMPACTING PROJECT, TO THE MAXIMUM EXTENT FEASIBLE (MEF).
   THEREFORE, A SINGLE, DIAGONAL CURB RAMP TYPE 2A WILL ONLY BE PERMITTED ON ALTERATION PROJECTS WITH MEF JUSTIFICATION DOCUMENTATION IN ACCORDANCE TO CDOT PROCEDURAL DIRECTIVE 605.1 AND IN COORDINATION WITH THE ADA TITLE II COORDINATOR.

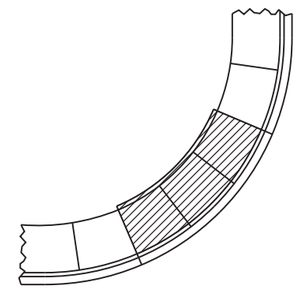

RAMP PAY AREA

FOR CURB RAMP TYPES 2A AND 2B.

*INCLUDES CONCRETE PEDESTRIAN CURB AS SHOWN.

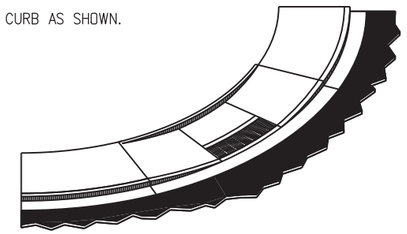

ISOMETRIC VIEW

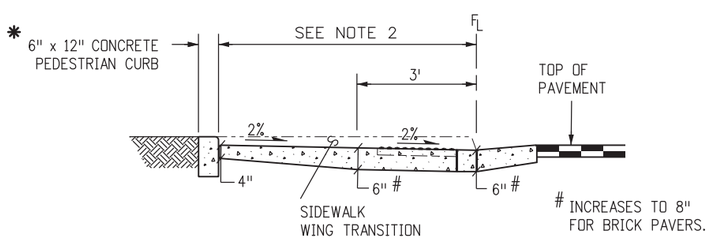

SECTION A-A

(PPBPA NOT SHOWN IN SECTION VIEWS AS IT MAY NOT BE REQUIRED.)

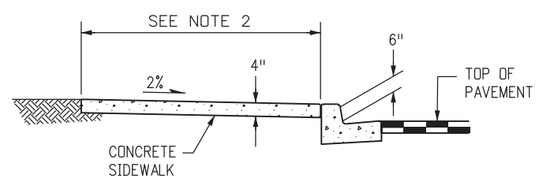

SECTION B-B

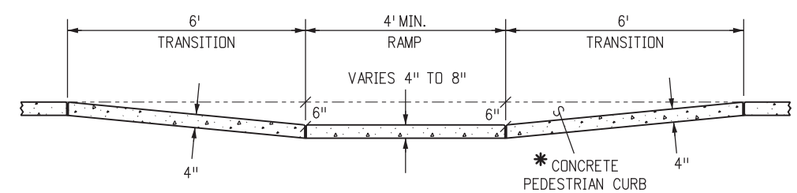

SECTION C-C

Computer File Information	
Creation Date: 07/04/12 Initials: DLM	
Last Modification Date: 04/28/14 Initials: LTA	(R-X)
Full Path: www.coloradodot.info/business/designsupport	(R-X)
Drawing File Name: 608010207.dgn	(R-X)
CAD Ver.: MicroStation V8 Scale: Not to Scale Units: English	(R-X)

Sheet Revisions	
Date:	Comments
04/22/14	Made ramps perpendicular in 2B. Added note 3.

Colorado Department of Transportation
4201 East Arkansas Avenue
CDOT HQ, 4th Floor
Denver, CO 80222
Phone: 303-757-9021 FAX: 303-757-9868
Division of Project Support DLM/LTA

CURB RAMPS

Issued By: Project Development Branch on July 4, 2012

STANDARD PLAN NO.

M-608-1

Sheet No. 2 of 7

● - PEDESTRIAN PUSH BUTTON POST ASSEMBLY (PPBPA).
SEE NOTE 8 ON SHEET 1 OF 7.
SEE STANDARD PLAN S-614-9 FOR PPBPA DETAILS.
SEE PLANS FOR LOCATIONS.
THE SIGN FACE SHALL BE PARALLEL TO THE CROSSWALK.

NOTES

1. CURB RAMP TYPE 3A MAY BE USED IN MID-BLOCK.
2. SEE PLANS FOR SIDEWALK WIDTH. THE MINIMUM SIDEWALK WIDTH IS 4 FT.
3. CURB RAMP TYPE 3A DIAGONAL (ON THE APEX) IS UNACCEPTABLE IN NEW CONSTRUCTION. TYPICALLY, TWO CURB RAMPS AS IN TYPE 3B, MUST BE PROVIDED AT EACH STREET CORNER.
   ADA TITLE II 28 C.F.R. SECTION 35.151(B) STATES:
   ALTERATIONS HAVE TO BE MADE READILYACCESSIBLE, WITHIN THE IMPACTING PROJECT, TO THE MAXIMUM EXTENT FEASIBLE (MEF).
   THEREFORE, A SINGLE, DIAGONAL CURB RAMP TYPE 3A WILL ONLY BE PERMITTED ON ALTERATION PROJECTS WITH MEF JUSTIFICATION DOCUMENTATION IN ACCORDANCE TO CDOT PROCEDURAL DIRECTIVE 605.1 AND IN COORDINATION WITH THE ADA TITLE II COORDINATOR.

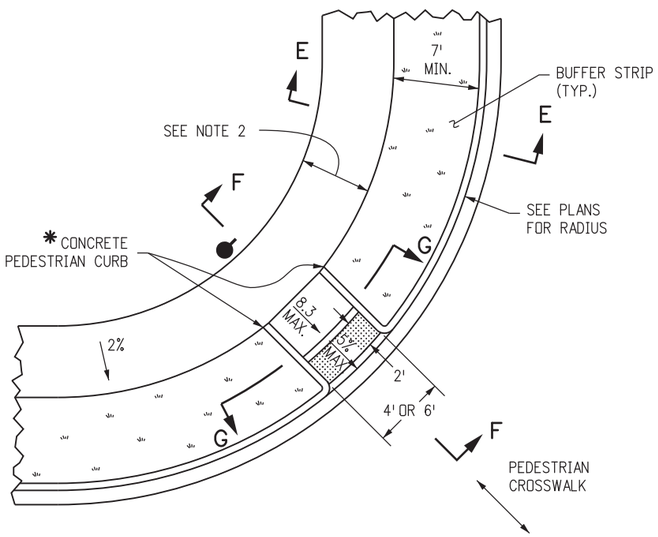

CURB RAMP TYPE 3A

SEE NOTE 3.

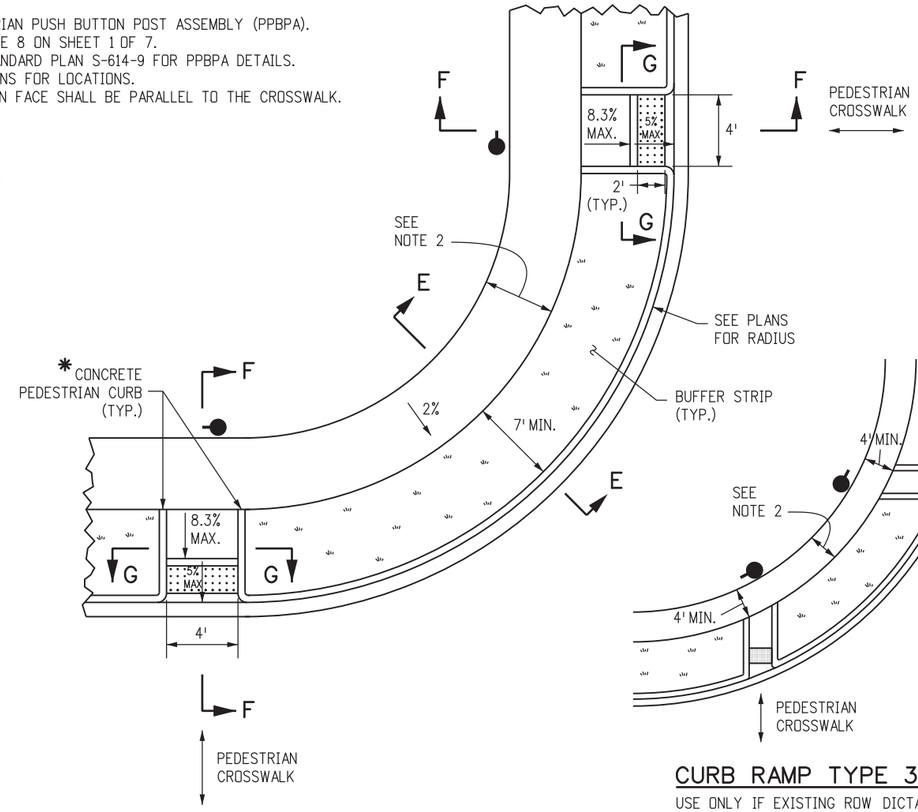

CURB RAMP TYPE 3B

SEE NOTE 3.

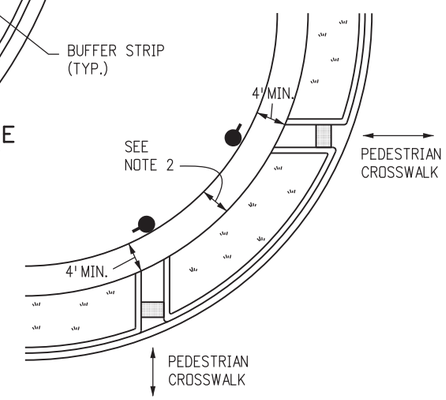

CURB RAMP TYPE 3B MODIFIED

USE ONLY IF EXISTING ROW DICTATES.
GRADE BREAKS SHALL NOT BE PERMITTED ON THE SURFACE OF THE RAMP RUNS AND TURNING SPACES.
SURFACE SLOPES THAT MEET AT GRADE BREAKS SHALL BE FLUSH. SEE NOTE 3.

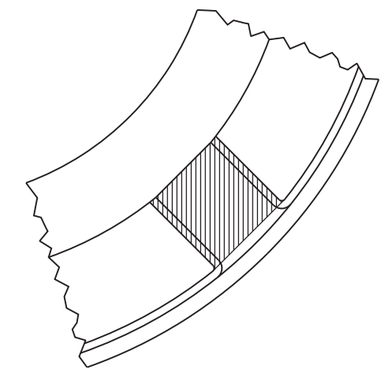

RAMP PAY AREA

FOR CURB RAMP TYPES 3A AMD 3B.

* INCLUDES CONCRETE PEDESTRIAN CURB AS SHOWN.

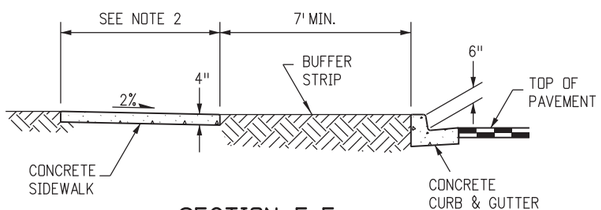

SECTION E-E

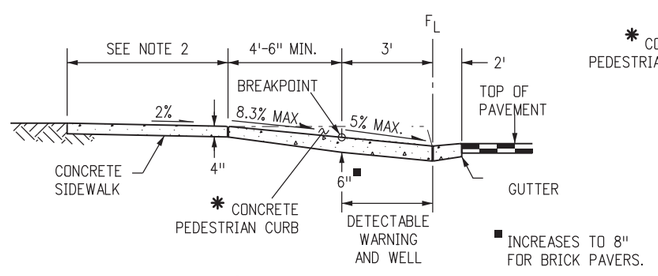

SECTION F-F

(PPBPA NOT SHOWN IN SECTION VIEWS AS IT MAY NOT BE REQUIRED.)

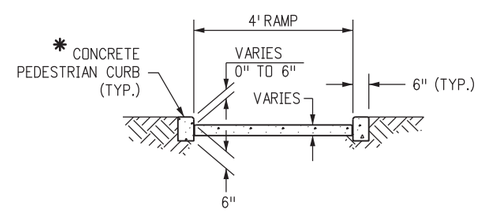

SECTION G-G

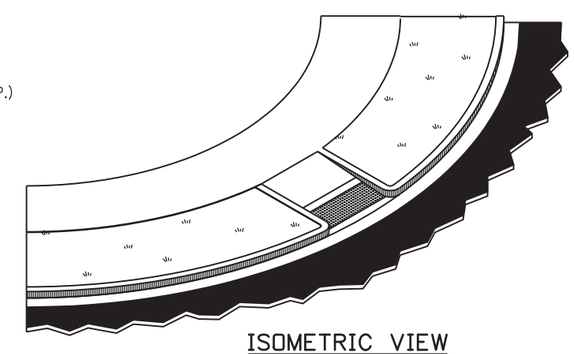

ISOMETRIC VIEW

Computer File Information		Sheet Revisions	
Creation Date: 07/04/12 Initials: DLM		Date:	Comments
Last Modification Date: 04/28/14 Initials: LTA	R-X		
Full Path: www.coloradodot.info/business/designsupport	R-X		
Drawing File Name: 608010307.dgn	R-X		
CAD Ver.: MicroStation V8 Scale: Not to Scale Units: English	R-X		

Colorado Department of Transportation
4201 East Arkansas Avenue
CDOT HQ, 4th Floor
Denver, CO 80222
Phone: 303-757-9021 FAX: 303-757-9868
Division of Project Support DLM/LTA

CURB RAMPS

Issued By: Project Development Branch on July 4, 2012

STANDARD PLAN NO.
M-608-1
Sheet No. 3 of 7

NOTES

1. PERPENDICULAR AND PARALLEL CURB RAMPS SHOWN ON THIS DRAWING ARE ACCEPTABLE FOR USE AT MID-BLOCK INSTALLATIONS.
2. SITE CONDITIONS WILL VARY. CONFIGURATION OF RAMPS, LANDINGS, AND TRANSITIONS MAY BE CHANGED BUT THEY MUST MEET THE DIMENSIONS AND SLOPES SHOWN HERE. THE USE OF FLARES, CURBWALLS, ETC. ARE AT THE DISCRETION OF THE ENGINEER.
3. PROVIDE DETECTABLE WARNING SURFACE FOR FULL WIDTH OF CURB CUT. SEE "PLAN VIEW OF DETECTABLE WARNING" DETAIL ON SHEET 5 FOR DETECTABLE WARNING SURFACE DIMENSIONS.
4. LOCATE CURB CUT WITHIN CROSSWALK.
5. RAMP GRADE BREAK MUST BE PERPENDICULAR TO THE RUNNING SLOPE.

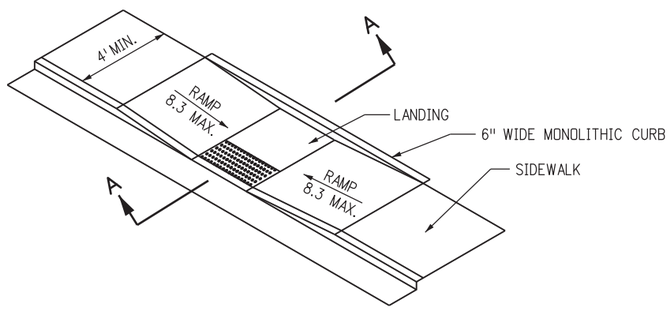

PARALLEL CURB RAMP WITHIN 4 FT. MIN. SIDEWALK

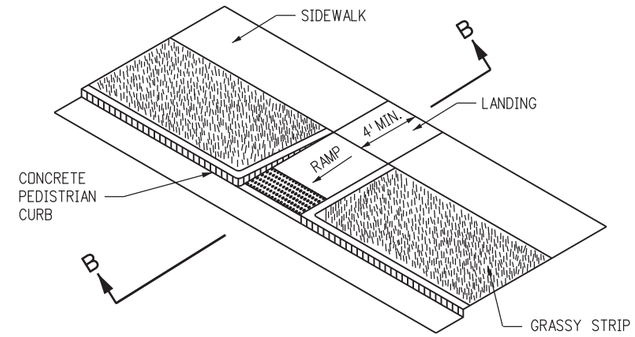

PERPENDICULAR CURB RAMP

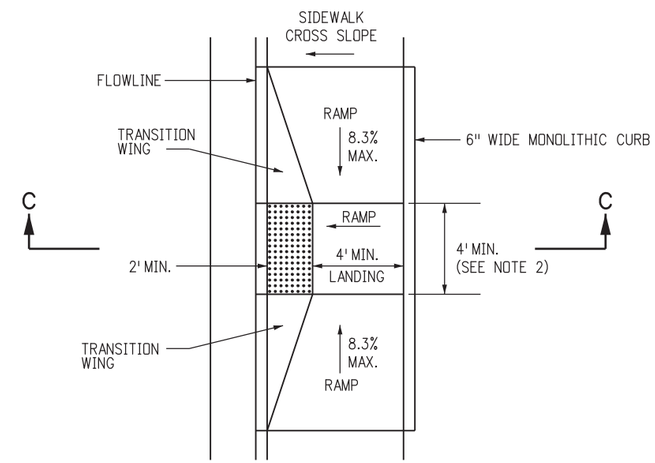

CURB RAMP WITHIN 6 FT. MIN. SIDEWALK

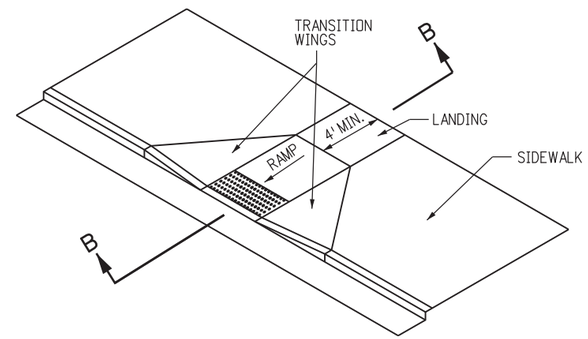

PERPENDICULAR CURB RAMP WITHIN SIDEWALK

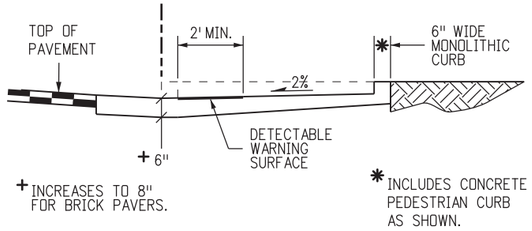

SECTION A-A

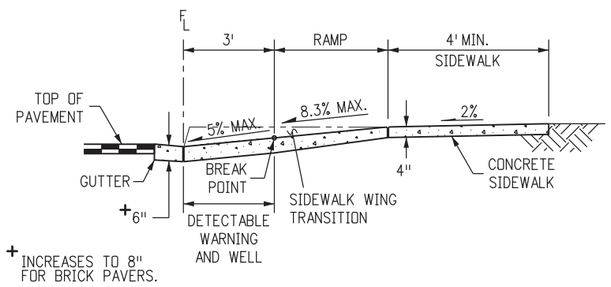

SECTION B-B

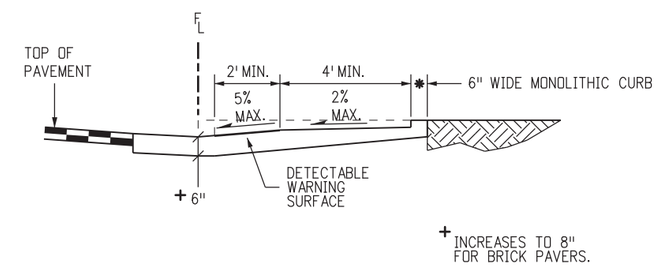

SECTION C-C

Computer File Information		
Creation Date: 07/04/12	Initials: DLM	
Last Modification Date: 04/28/14	Initials: LTA	(R-X)
Full Path: www.coloradodot.info/business/designsupport		(R-X)
Drawing File Name: 608010407.dgn		(R-X)
CAD Ver.: MicroStation V8 Scale: Not to Scale Units: English		(R-X)

Sheet Revisions	
Date:	Comments

Colorado Department of Transportation
4201 East Arkansas Avenue
CDOT HQ, 4th Floor
Denver, CO 80222
Phone: 303-757-9021 FAX: 303-757-9868
Division of Project Support DLM/LTA

CURB RAMPS

Issued By: Project Development Branch on July 4, 2012

STANDARD PLAN NO.

M-608-1

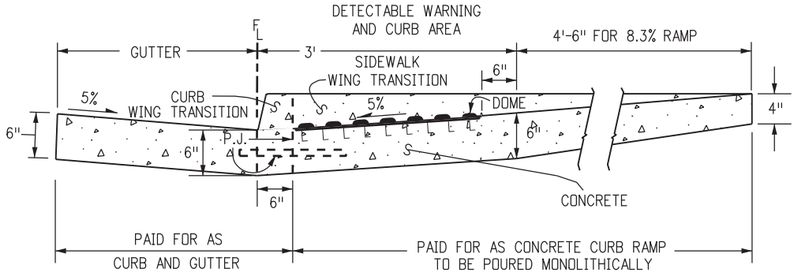

DETAIL FOR TYPES 1 AND 3 CURB RAMPS

P.J. = PERMISSIBLE JOINT WITH EPOXY-COATED DEFORMED NO. 4 BY 18 IN. BARS CONFORMING TO AASHTO M 284 AT 18 IN. SPACING.

SIDE CROSS SECTION VIEW OF DETECTABLE WARNING, CURB, AND GUTTER

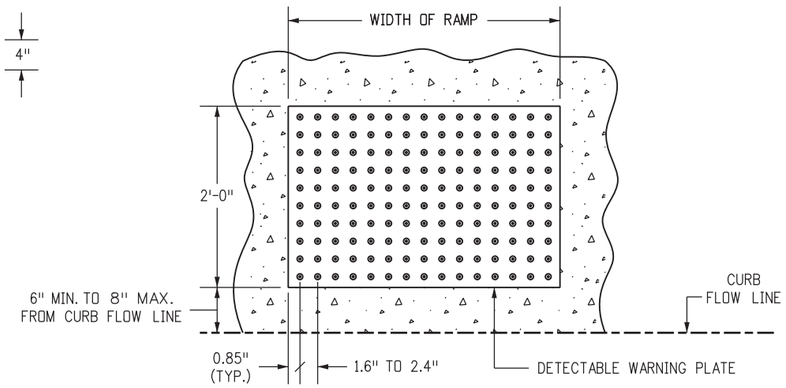

PLAN VIEW OF DETECTABLE WARNING

NOTES

1. THE TRUNCATED DOME PLATE SHALL BE EMBEDDED IN THE CONCRETE CURB RAMP WHILE CONCRETE IS PLASTIC.
2. THE TRUNCATED DOME PLATE TO BE USED SHALL BE ON THE CDOT APPROVED PRODUCT LIST.
3. WHEN THE DETECTABLE WARNING SURFACE IS CUT, GRIND OFF REMAINING PORTION OF ANY CUT DOMES. SEAL ALL CUT PANEL EDGES TO PREVENT WATER DAMAGE.
4. THE DETECTABLE WARNING SURFACE SHALL SPAN THE ENTIRE WIDTH OF THE RAMP. IF CONDITIONS DO NOT ALLOW THE ENTIRE SPAN, THE DECTECTABLE WARNING SURFACE SPAN SHALL NOT BE MORE THAN 2 INCHES AWAY FROM EACH SIDE OF RAMP.

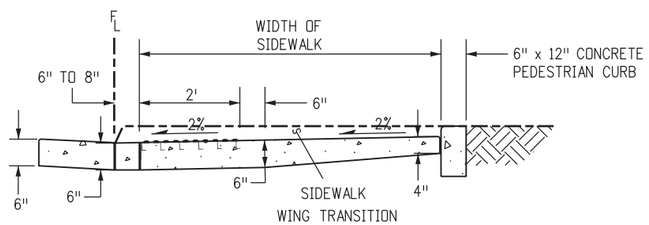

DETAIL FOR TYPE 2 CURB RAMP

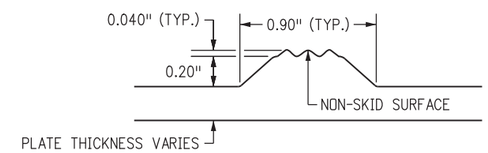

ELEVATION VIEW OF DETECTABLE WARNING PLATE

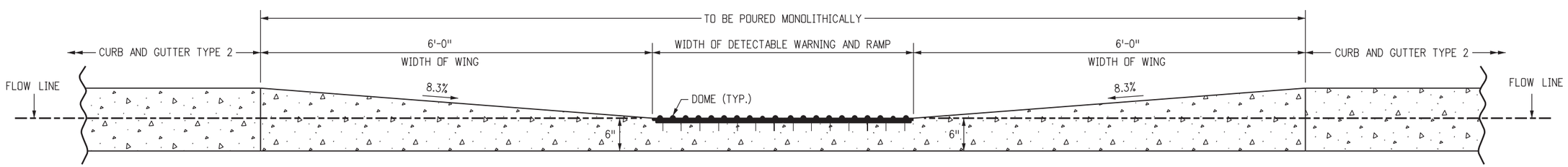

FRONT SECTION VIEW OF DETECTABLE WARNING, CURB, AND GUTTER

CURB RAMP WITH A TRUNCATED DOME SURFACE PLATE

Computer File Information		Sheet Revisions	
Creation Date: 07/04/12 Initials: DLM		Date:	Comments
Last Modification Date: 4/28/14 Initials: LTA	R-X		
Full Path: www.coloradodot.info/business/designsupport	R-X		
Drawing File Name: 608010507.dgn	R-X		
CAD Ver.: MicroStation V8 Scale: Not to Scale Units: English	R-X		

Colorado Department of Transportation
4201 East Arkansas Avenue
CDOT HQ, 4th Floor
Denver, CO 80222
Phone: 303-757-9021 FAX: 303-757-9868
Division of Project Support DLM/LTA

CURB RAMPS

Issued By: Project Development Branch on July 4, 2012

STANDARD PLAN NO.
M-608-1
Sheet No. 5 of 7

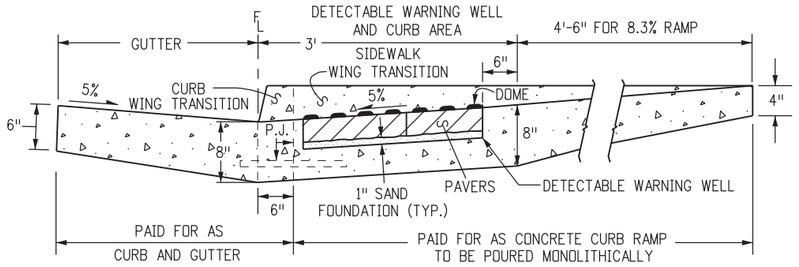

DETAIL FOR TYPES 1 AND 3 CURB RAMPS

P.J. = PERMISSIBLE JOINT WITH EPOXY-COATED DEFORMED NO. 4 BY 18 IN. BARS CONFORMING TO AASHTO M 284 AT 18 IN. SPACING.

SIDE CROSS SECTION VIEW OF DETECTABLE WARNING, WELL, CURB, AND GUTTER

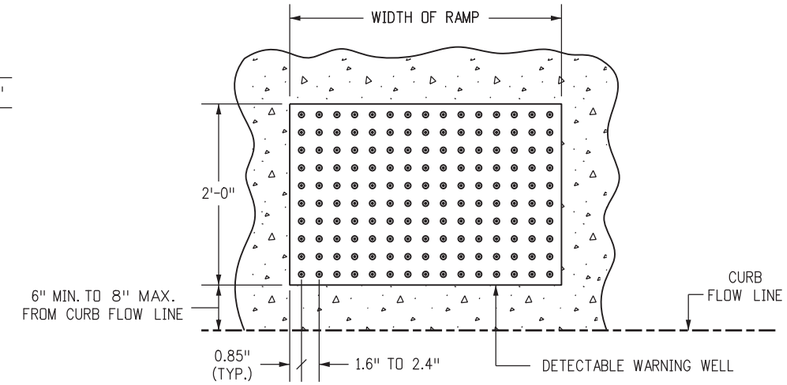

PLAN VIEW OF DETECTABLE WARNING AND WELL

(PAVERS NOT DRAWN TO SCALE)

NOTES

1. THE DETECTABLE WARNINGS SHALL BE BE MADE OF PAVERS WITH A TRUNCATED DOME SURFACE.
2. THE TOP OF THE DRAINAGE WEEP HOLE SHALL BE LOCATED AT THE LOWEST POINT OF THE DETECTABLE WARNING WELL.
3. RAMP SLOPES SHALL BE 12:1 OR FLATTER. THE DETECTABLE WARNING AND WELL AREA SLOPES SHALL BE 20:1 OR FLATTER.
4. THE DETECTABLE WARNING SURFACE SHALL SPAN THE ENTIRE WIDTH OF THE RAMP. IF CONDITIONS DO NOT ALLOW THE ENTIRE SPAN, THE DECTECTABLE WARNING SURFACE SPAN SHALL NOT BE MORE THAN 2 INCHES AWAY FROM EACH SIDE OF RAMP.

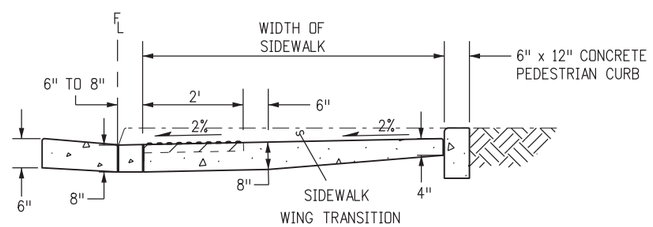

DETAIL FOR TYPE 2 CURB RAMP

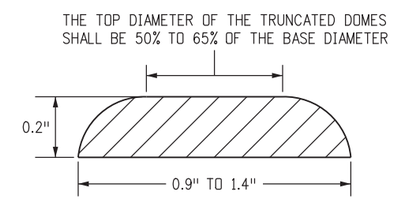

ELEVATION VIEW OF SINGLE DOME

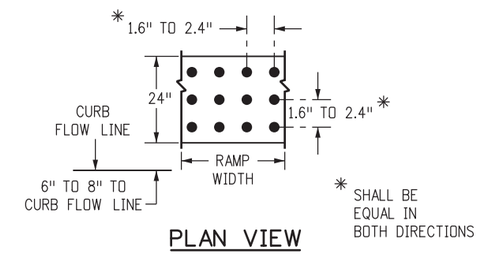

PLAN VIEW

DOME AND DETECTABLE WARNING DETAILS

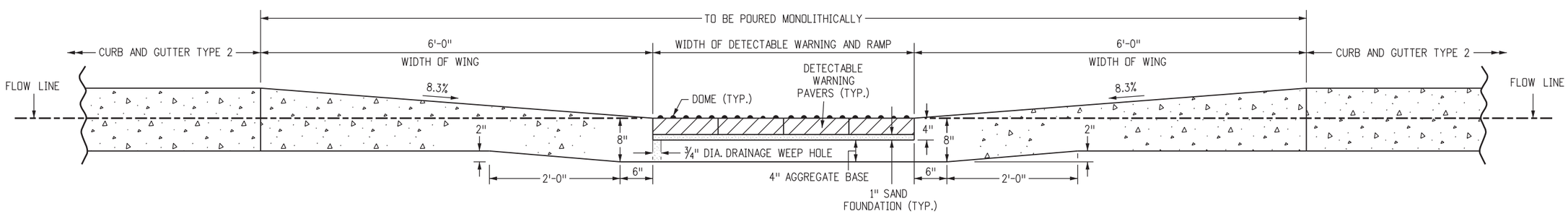

FRONT SECTION VIEW OF DETECTABLE WARNING, WELL, CURB, AND GUTTER

CURB RAMP WITH DOME PAVER OPTION

Computer File Information		
Creation Date: 07/04/12	Initials: DLM	
Last Modification Date: 4/28/14	Initials: LTA	(R-X)
Full Path: www.coloradodot.info/business/designsupport		(R-X)
Drawing File Name: 608010607.dgn		(R-X)
CAD Ver.: MicroStation V8 Scale: Not to Scale Units: English		(R-X)

Sheet Revisions	
Date:	Comments

Colorado Department of Transportation
4201 East Arkansas Avenue
CDOT HQ, 4th Floor
Denver, CO 80222
Phone: 303-757-9021 FAX: 303-757-9868
Division of Project Support DLM/LTA

CURB RAMPS

Issued By: Project Development Branch on July 4, 2012

STANDARD PLAN NO.

M-608-1

Sheet No. 6 of 7

NOTES

1. IF THE EXISTING SIDEWALK WIDTHS ARE DIFFERENT, MATCH THE SMALLEST WIDTH TO 4 FT. MIN.
2. SLOPES SHOWN AS TYPICAL IN SECTION A-A MAY BE ADJUSTED IF NECESSARY TO FIT EXISTING CONDITIONS, BUT MAY NOT EXCEED 5% SLOPE UNDER ANY CONDITIONS.
3. ALL TRUNCATED DOME PANELS OR PAVERS PLACED AT THE SAME CORNER SHALL BE MADE UP OF THE SAME UNIFORM MATERIAL TYPE.

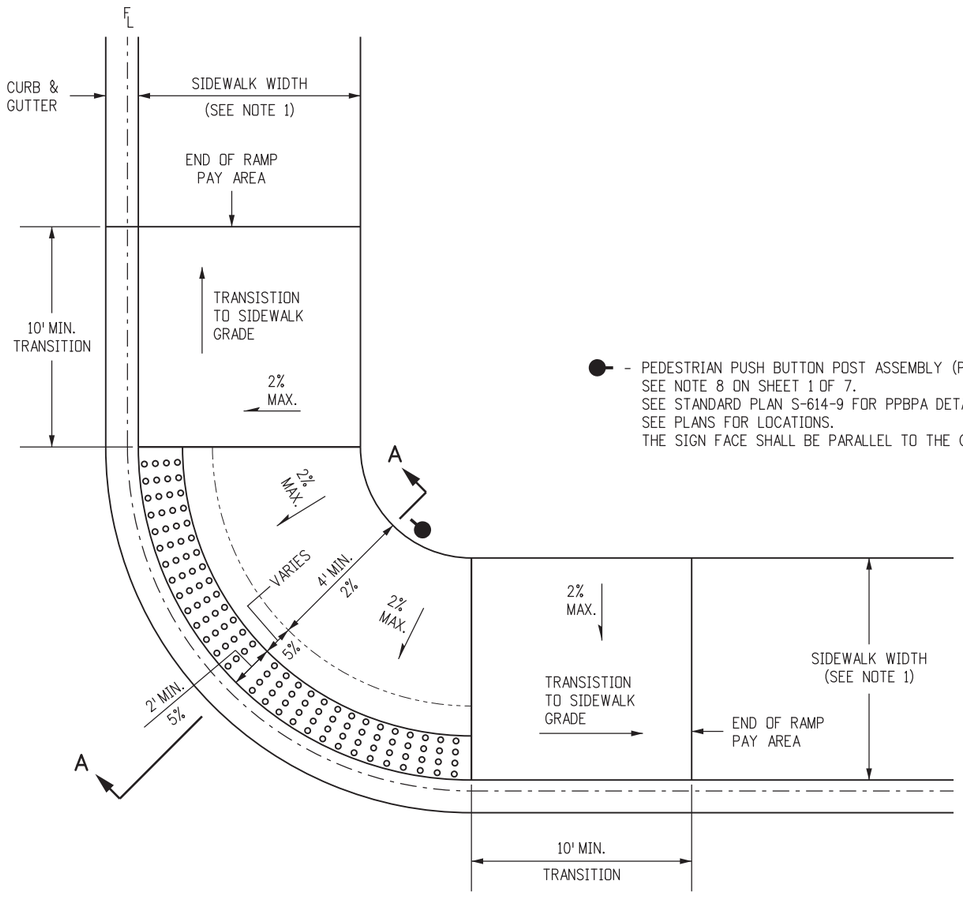

- PEDESTRIAN PUSH BUTTON POST ASSEMBLY (PPBPA).
SEE NOTE 8 ON SHEET 1 OF 7.
SEE STANDARD PLAN S-614-9 FOR PPBPA DETAILS.
SEE PLANS FOR LOCATIONS.
THE SIGN FACE SHALL BE PARALLEL TO THE CROSSWALK.

CORNER BLENDED TRANSITION CURB RAMP

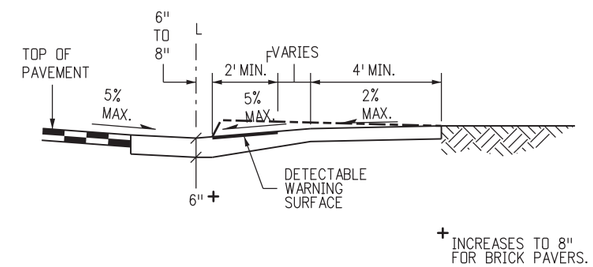

SECTION A-A

(PPBPA NOT SHOWN IN SECTION VIEWS AS IT MAY NOT BE REQUIRED.)

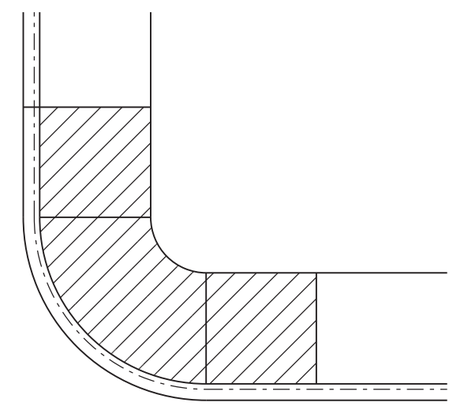

RAMP PAY AREA

FOR CORNER BLENDED TRANSITION CURB RAMP

Computer File Information		
Creation Date: 07/04/12	Initials: DLM	
Last Modification Date: 04/24/14	Initials: LTA	(R-X)
Full Path: www.coloradodot.info/business/designsupport		(R-X)
Drawing File Name: 608010707.dgn		(R-X)
CAD Ver.: MicroStation V8 Scale: Not to Scale Units: English		(R-X)

Sheet Revisions	
Date:	Comments

Colorado Department of Transportation
4201 East Arkansas Avenue
CDOT HQ, 4th Floor
Denver, CO 80222
Phone: 303-757-9021 FAX: 303-757-9868
Division of Project Support DLM/LTA

CURB RAMPS

Issued By: Project Development Branch on July 4, 2012

STANDARD PLAN NO.
M-608-1
Sheet No. 7 of 7

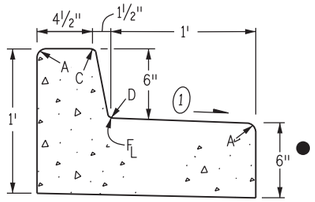

CURB AND GUTTER TYPE 2
(SECTION IB)
(6 IN. BARRIER - 1 FT. GUTTER)

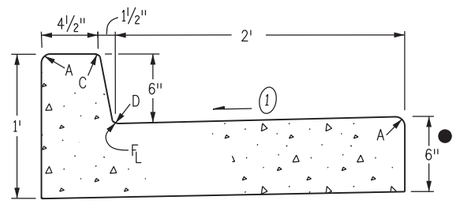

CURB AND GUTTER TYPE 2
(SECTION IIB)
(6 IN. BARRIER - 2 FT. GUTTER)

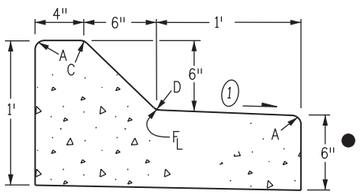

CURB AND GUTTER TYPE 2
(SECTION IM)
(6 IN. MOUNTABLE - 1 FT. GUTTER)

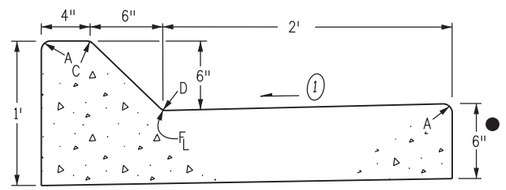

CURB AND GUTTER TYPE 2
(SECTION IIM)
(6 IN. MOUNTABLE - 2 FT. GUTTER)

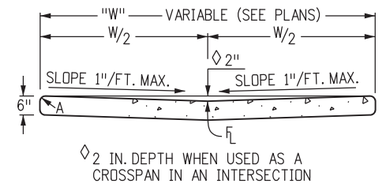

GUTTER TYPE 2

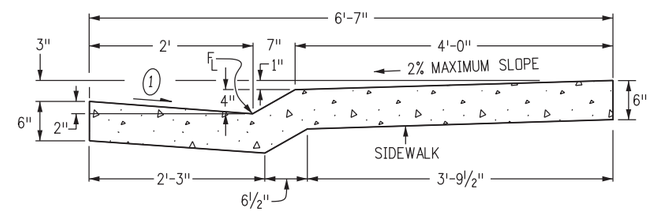

CURB AND GUTTER TYPE 2
(SECTION MS)
(4 IN. MOUNTABLE WITH SIDEWALK)

GENERAL NOTES

1. ON ROADWAY CURVES WITH A RADIUS OF 1,900 FT. OR LESS, CURBS AND GUTTERS ARE TO BE PLACED ON THE ARC OF THE CURVE, UNLESS OTHERWISE NOTED ON THE PLANS. A MAXIMUM CHORD LENGTH OF 10 FT. MAY BE USED WHEN THE CURVE RADIUS IS GREATER THAN 1,900 FT.
2. CONCRETE SHALL BE CLASS B.
3. PROFILE GRADE OF CURBS AND GUTTERS SHALL BE LOCATED AT THE FLOW LINE.
4. CURB TYPE 4 (KEY-WAY) MAY BE USED IN LIEU OF CURB AND GUTTER TYPE 2 (SECTIONS IB AND IM) UNLESS OTHERWISE SPECIFIED ON THE PLANS.
5. GUTTER CROSS SLOPES MAY BE ADJUSTED TO FACILITATE DRAINAGE FOR PROFILE GRADES AS SHOWN ON THE PLANS.
6. THICKNESS OF CURB AND GUTTER SECTION SHALL MATCH CONCRETE PAVEMENT THICKNESS IF SHOWN ON THE PLANS. CURB AND GUTTER SHALL BE CLASS P CONCRETE IF PLACED MONOLITHICALLY WITH CONCRETE PAVEMENT.
7. INCREASE SIDEWALK THICKNESS TO 6 IN. AT LOCATIONS SHOWN ON THE PLANS.
8. MINIMUM SIDEWALK WIDTH IS 4 FT.

▲ EXPANSION JOINTS SHALL BE INSTALLED WHEN ABUTTING EXISTING CONCRETE OR FIXED STRUCTURE. EXPANSION JOINT MATERIAL SHALL BE ½ IN. THICK AND SHALL EXTEND THE FULL DEPTH OF CONTACT SURFACE.

(1) GUTTER CROSS SLOPES SHALL BE ½ IN./FT. WHEN DRAINING AWAY FROM CURB AND 1 IN./FT. WHEN DRAINING TOWARD CURB (WITH EXCEPTION TO IMMEDIATELY ADJACENT TO CURB RAMPS - SEE STANDARD PLAN M-608-1 FOR SLOPE REQUIREMENTS).

● WHEN TIE BARS ARE REQUIRED, THE GUTTER THICKNESS SHALL BE INCREASED TO THE PAVEMENT THICKNESS (T). BARS SHALL BE EPOXY-COATED #4 CONFORMING TO AASHTO M 284 AND SPACED AT 3 FT. INTERVALS. THEY SHALL BE INSERTED T/2 AND 1#2 LENGTH INTO THE GUTTER.

LEGEND FOR RADII
A = ⅛" TO ¼"
B = 1"
C = 1½"
D = 1½" TO 2"

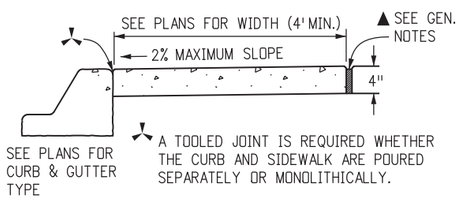

CONCRETE SIDEWALK

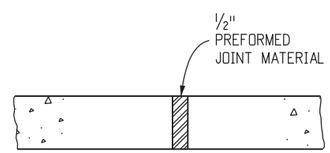

NOTES: 1. EXPANSION JOINTS SHALL BE PLACED IN THE SIDEWALK AT INTERVALS OF NOT MORE THAN 500 FT.

2. EXPANSION JOINTS MAY BE SEALED WHEN SPECIFIED ON THE PLANS.

SIDEWALK EXPANSION JOINT

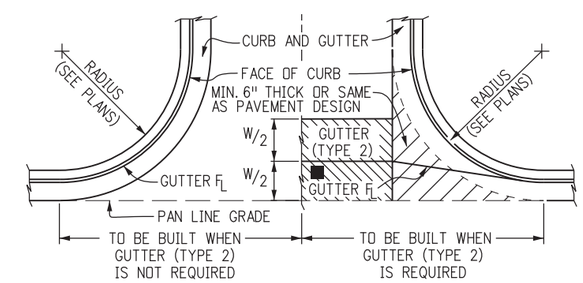

THIS AREA SHALL BE POURED MONOLITHICALLY WITH CURB AND GUTTER AND PAID FOR AS "CONCRETE PAVEMENT".

■ FLOW LINE LOCATION WILL BE ESTABLISHED BY W/2 SHOWN ON PLANS.

CONSTRUCTION OF CONCRETE GUTTERS AT INTERSECTION

Computer File Information	
Creation Date: 07/04/12	Initials: DLM
Last Modification Date: 05/16/14	Initials: LTA
Full Path: www.coloradodot.info/business/designsupport	
Drawing File Name: 609010104.dgn	
CAD Ver.: MicroStation V8 Scale: Not to Scale	Units: English

	Sheet Revisions	
	Date:	Comments
(R-X)	07/24/12	Changed Tie Bar spacing from 30" to 36".
(R-X)	05/16/14	Revised Gutter Cross Slope Note to exclude ADA Ramp
(R-X)		
(R-X)		

Colorado Department of Transportation
4201 East Arkansas Avenue
Denver, Colorado 80222
Phone: (303) 757-9083
Fax: (303) 757-9820
Project Development Branch DLM/LTA

CURB, GUTTERS, AND SIDEWALKS

Issued By: Project Development Branch on July 4, 2012

STANDARD PLAN NO.
M-609-1

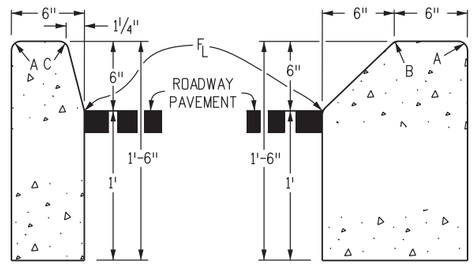

CURB TYPE 2
(SECTION B)
6 IN. BARRIER

CURB TYPE 2
(SECTION M)
6 IN. MOUNTABLE

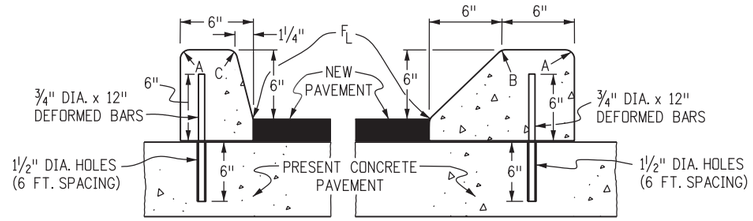

¾" DIA. x 12" DEFORMED REINFORCING BARS AT 6 FT. SPACING SHALL BE GROUTED IN 1¼" DIA. HOLES IN EXISTING CONCRETE. GROUT SHALL CONSIST OF 2 PARTS CLEAN SAND AND 1 PART CEMENT. COST OF INSTALLATION SHALL BE INCLUDED IN THE PRICE BID FOR CURB.

CURB TYPE 4
(SECTION B)
6 IN. BARRIER

CURB TYPE 4
(SECTION M)
6 IN. MOUNTABLE

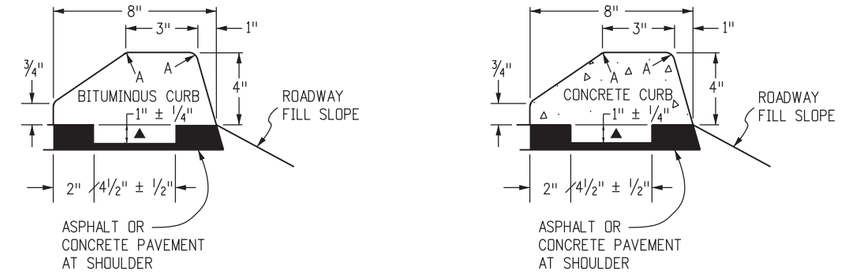

CURB TYPE 6
(SECTION M)
4 IN. MOUNTABLE

NOTE: BITUMINOUS OR CONCRETE * UNLESS OTHWISE SPECIFIED ON THE PLANS.

▲ KEY-WAY MAY BE OMITTED WHEN PLACED UNDER GUARDRAIL.

LEGEND FOR RADII
A = ⅛ TO ¼"
B = 1"
C = 1½"
D = 1½" TO 2"

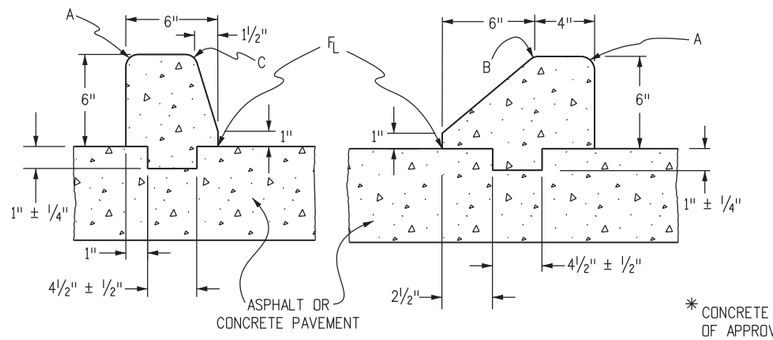

(SECTION B) (SECTION M)

CURB TYPE 4 (KEY-WAY)*

* CONCRETE CLASS B SHALL CONTAIN 1.5 POUNDS PER CUBIC YARD OF APPROVED POLYPROPYLENE FIBERS AND MAY HAVE A NOMINAL AGGREGATE SIZE OF ⅜ IN.

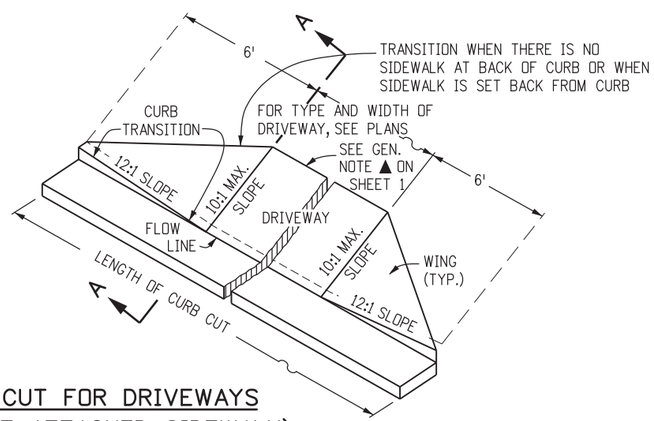

CURB CUT FOR DRIVEWAYS
(WITHOUT ATTACHED SIDEWALK)

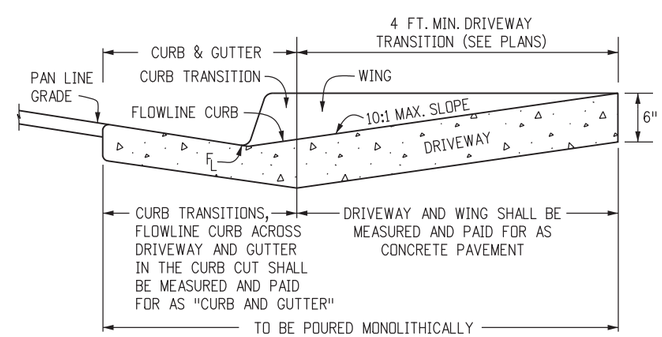

SECTION A-A

CONCRETE PAVEMENT (DRIVEWAYS)

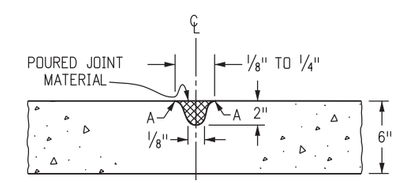

NOTE: RECOMMENED JOINT SPACING IS EVERY 8 FOOT ALONG THE WIDTH AND LENGTH OF DRIVEWAY. FOR DRIVEWAYS WIDER THAN 12 FEET, JOINTS ARE REQUIRED.

TRANSVERSE CONTRACTION JOINT
FOR CONCRETE PAVEMENT (DRIVEWAYS)

Computer File Information		
Creation Date: 07/04/12	Initials: DD	
Last Modification Date: 07/04/12	Initials: LTA	(R-X)
Full Path: www.coloradodot.info/business/designsupport		(R-X)
Drawing File Name: 609010204.dgn		(R-X)
CAD Ver.: MicroStation V8 Scale: Not to Scale Units: English		(R-X)

Sheet Revisions	
Date:	Comments

Colorado Department of Transportation
4201 East Arkansas Avenue
Denver, Colorado 80222
Phone: (303) 757-9083
Fax: (303) 757-9820
Project Development Branch DD/LTA

CURB, GUTTERS, AND SIDEWALKS

Issued By: Project Development Branch on July 4, 2012

STANDARD PLAN NO.
M-609-1
Sheet No. 2 of 4

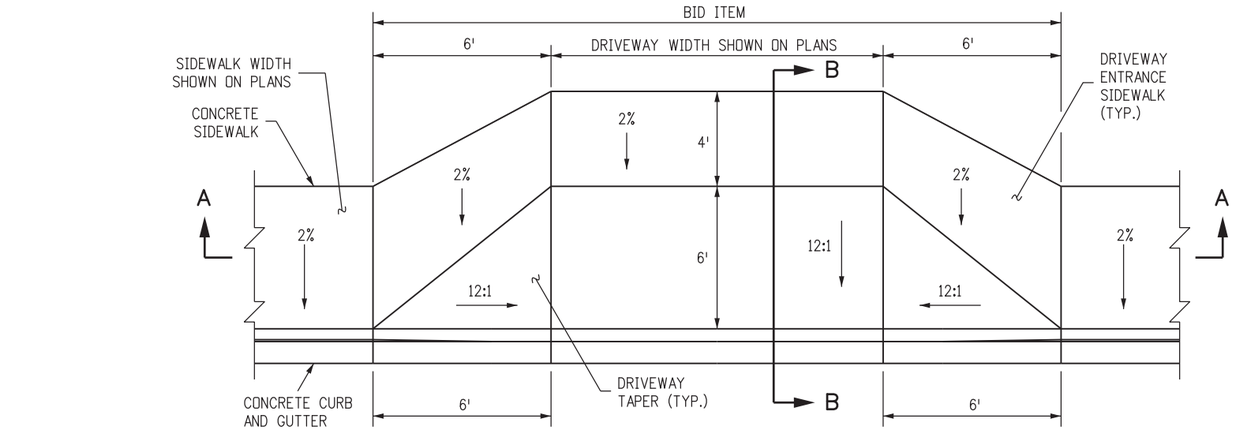

CONCRETE DRIVEWAY ENTRANCE TYPE 1

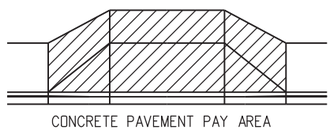

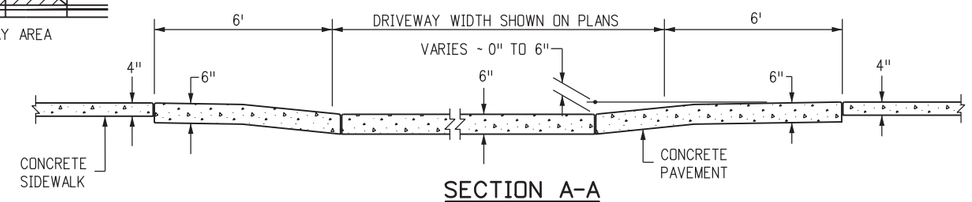

SECTION A-A

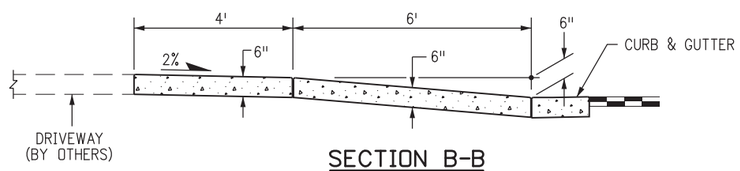

SECTION B-B

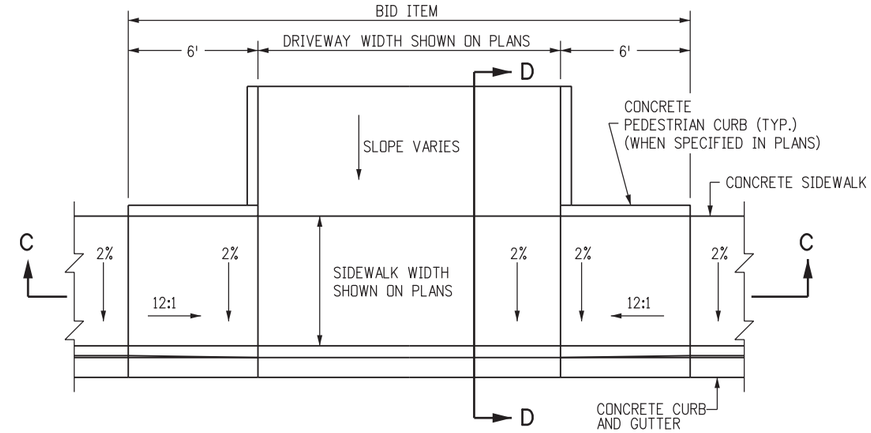

CONCRETE DRIVEWAY ENTRANCE TYPE 2

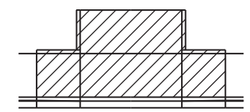

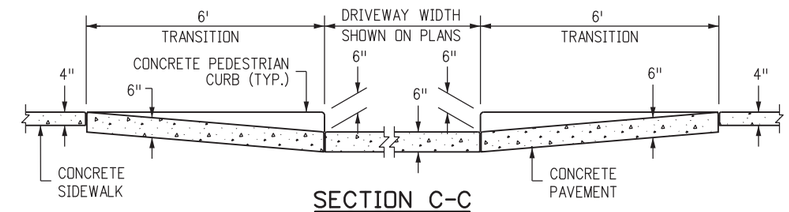

SECTION C-C

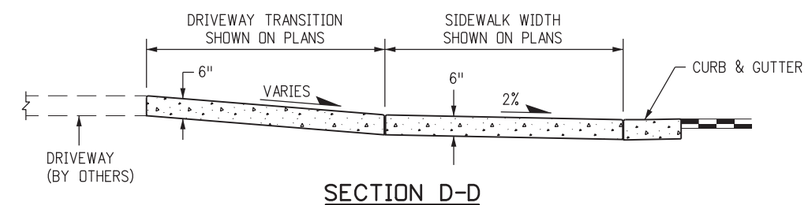

SECTION D-D

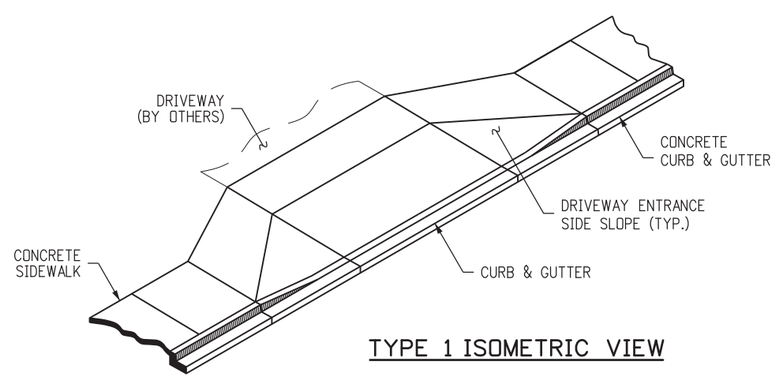

TYPE 1 ISOMETRIC VIEW

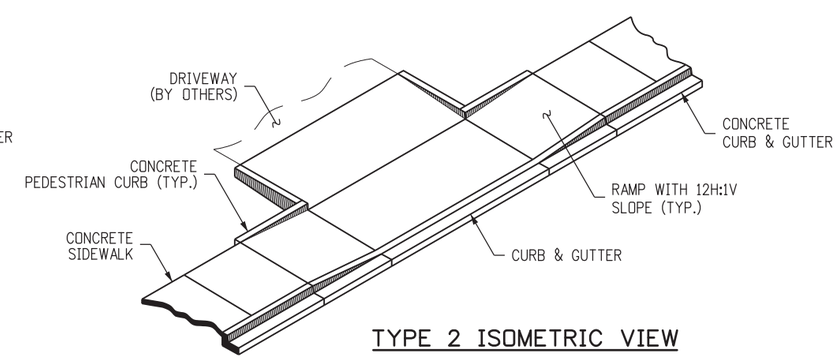

TYPE 2 ISOMETRIC VIEW

NOTES

1. DRAINAGE STRUCTURES, TRAFFIC SIGNAL EQUIPMENT, JUNCTION BOXES, AND OTHER OBSTRUCTIONS SHOULD NOT BE PLACED IN FRONT OF THE DRIVEWAY RAMP ACCESS AREAS.
2. FOR THE CURB AND GUTTER SHOWN, SEE PLANS FOR CURB TYPE.
3. RAMP SLOPES SHALL BE 12:1 OR FLATTER.
4. CONSTRUCTION OF THE CONCRETE PEDESTRIAN CURB SHALL BE INCLUDED IN THE BID PRICE OF THE CONCRETE PAVEMENT.

Computer File Information			Sheet Revisions	
Creation Date: 07/04/12 Initials: DD			Date:	Comments
Last Modification Date: 07/04/12 Initials: LTA	(R-X)			
Full Path: www.coloradodot.info/business/designsupport	(R-X)			
Drawing File Name: 609010304.dgn	(R-X)			
CAD Ver.: MicroStation V8 Scale: Not to Scale Units: English	(R-X)			

Colorado Department of Transportation
4201 East Arkansas Avenue
Denver, Colorado 80222
Phone: (303) 757-9083
Fax: (303) 757-9820
Project Development Branch DD/LTA

CURB, GUTTERS, AND SIDEWALKS

Issued By: Project Development Branch on July 4, 2012

STANDARD PLAN NO.

M-609-1

Sheet No. 3 of 4

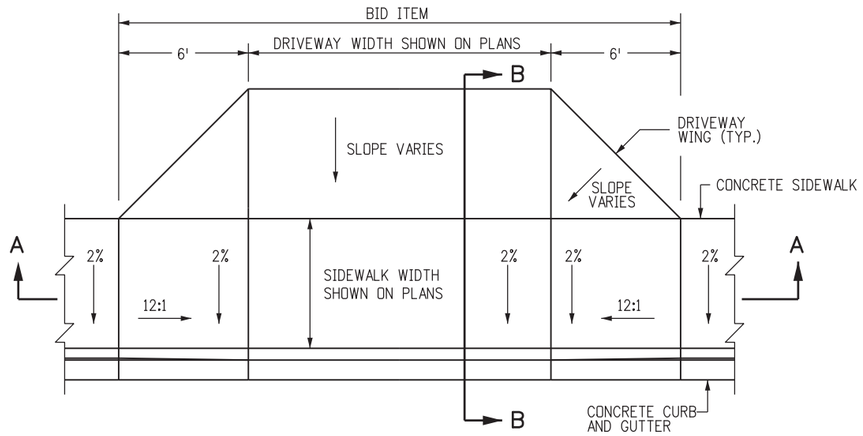

CONCRETE DRIVEWAY ENTRANCE TYPE 3

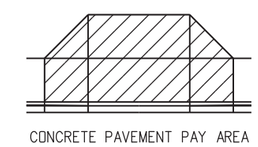

NOTES

1. DRAINAGE STRUCTURES, TRAFFIC SIGNAL EQUIPMENT, JUNCTION BOXES, AND OTHER OBSTRUCTIONS SHOULD NOT BE PLACED IN FRONT OF THE DRIVEWAY RAMP ACCESS AREAS.
2. FOR THE CURB AND GUTTER SHOWN, SEE PLANS FOR CURB TYPE.
3. RAMP SLOPES SHALL BE 12:1 OR FLATTER.

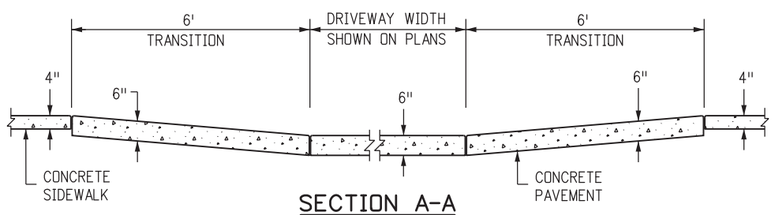

SECTION A-A

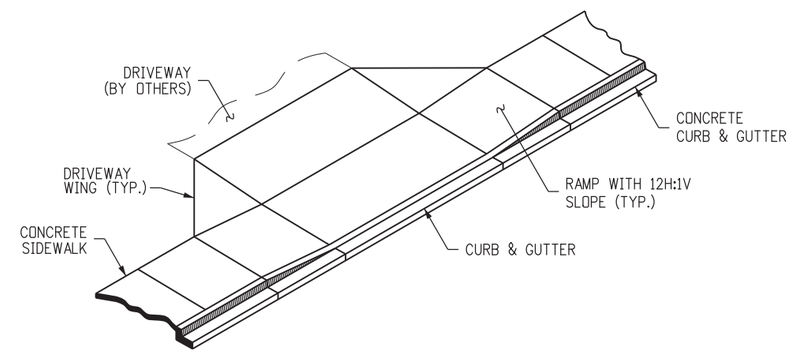

TYPE 3 ISOMETRIC VIEW

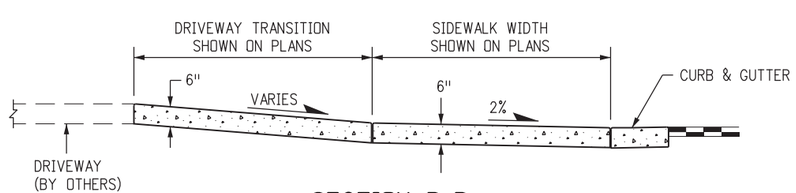

SECTION B-B

Computer File Information		
Creation Date: 07/04/12	Initials: DD	
Last Modification Date: 07/04/12	Initials: LTA	(R-X)
Full Path: www.coloradodot.info/business/designsupport		(R-X)
Drawing File Name: 609010404.dgn		(R-X)
CAD Ver.: MicroStation V8 Scale: Not to Scale	Units: English	(R-X)

Sheet Revisions	
Date:	Comments

Colorado Department of Transportation
4201 East Arkansas Avenue
Denver, Colorado 80222
Phone: (303) 757-9083
Fax: (303) 757-9820
Project Development Branch DD/LTA

CURB, GUTTERS, AND SIDEWALKS

Issued By: Project Development Branch on July 4, 2012

STANDARD PLAN NO.

M-609-1

Sheet No. 4 of 4

GENERAL NOTES

1. ALL CONSTRUCTION ZONE TRAFFIC CONTROL DEVICES, INCLUDING BUT NOT LIMITED TO BARRICADES, SIGNS, ARROW PANELS, FLASHING BEACON (PORTABLE), AND CHANNELIZING DEVICES, SHALL BE FURNISHED, INSTALLED, MAINTAINED (INCLUDING WASHING), REPLACED IF DAMAGED, REMOVED WHEN TEMPORARILY NOT IN USE AND RETURNED WHEN REQUIRED, RESET AS NECESSARY DURING THE PROGRESS OF CONSTRUCTION, AND REMOVED ENTIRELY WHEN THE PROJECT IS COMPLETED. ALL DEVICES SHALL MEET THE REQUIREMENTS OF THE LATEST EDITION OF THE ATSSA "QUALITY GUIDELINES FOR TEMPORARY TRAFFIC CONTROL DEVICES & FEATURES".

2. WORK ON THE PROJECT SHALL NOT BE STARTED UNTIL ALL REQUIRED TRAFFIC CONTROL DEVICES ARE IN PLACE, AND APPROVED BY THE ENGINEER.

3. WHEN SPEED LIMIT REDUCTION IS REQUIRED, SUCH REDUCTION SHALL BE IN ACCORDANCE WITH CDOT FORM 568, "AUTHORIZATION AND DECLARATION OF TEMPORARY SPEED LIMITS."

   WHEN A CHANGE IN AN EXISTING SPEED LIMIT IS REQUIRED, THE R2-1 SIGNS, SHOWN ON THE SCHEDULE OF CONSTRUCTION TRAFFIC CONTROL DEVICES, SHOULD BE INSTALLED AT THE LOCATIONS SHOWN ON THE TYPICAL CASES BY R2-1 (OPTIONAL) SIGNS.

   AN ADVISORY SPEED PLATE (W13-1P) MAY BE USED WITH A WARNING SIGN WHEN THE MAXIMUM RECOMMENDED SPEED FOR CONDITION NAMED IS LOWER THAN THE POSTED SPEED LIMIT.

   THE REGULATORY OR ADVISORY SPEED REDUCTION DISPLAYED SHALL NOT EXCEED 15 MPH PER SIGN INSTALLATION.

4. ANY TRAFFIC CONTROL DEVICE THAT IS DAMAGED, WEATHERED, WORN, OR OTHERWISE DEEMED UNACCEPTABLE BY THE ENGINEER, SHALL BE REPLACED.

5. CONTRACTOR AND PERSONAL VEHICLE PARKING IS PROHIBITED WITHIN THE RIGHT-OF-WAY UNLESS DESIGNATED ON THE PLANS, OR APPROVED BY THE ENGINEER.

6. CONSTRUCTION TRAFFIC SIGNS SHALL BE MEASURED BY THE FOLLOWING SIZES AND DESCRIPTIONS:

PANEL SIZE A	0.01 TO 9.00 SQ. FT. (INCLUDING TYPE 1 AND TYPE 2 BARRICADES).
PANEL SIZE B	9.01 TO 16.00 SQ. FT.
PANEL SIZE C	GREATER THAN 16 SQ. FT.

   CONSTRUCTION TRAFFIC SIGN (SPECIAL), SQ. FT., MAY BE USED FOR SOME PROJECT SPECIFIC INFORMATION SIGNS.

   FOR DETAILED DIMENSIONS OF SIGNS WITH SIGN CODE NUMBERS, SEE "STANDARD HIGHWAY SIGNS" AND THE "COLORADO SUPPLEMENT" THERETO. SIGN LAYOUTS FOR OTHER SIGNS WILL BE FURNISHED IN THE PLANS, TRANSMITTED TO THE ENGINEER AFTER AWARD, OR MAY BE AVAILABLE UPON REQUEST.

   W20-5 WARNING SIGNS SHALL BE FURNISHED WITH EXCHANGEABLE PLAQUES READING "RIGHT", "LEFT", "CENTER", "RIGHT 2", ETC. AT NO ADDITIONAL COST.

7. ALL WARNING AND REGULATORY SIGNS SHALL BE POSTED ON BOTH SIDES OF THE ROADWAY ON DIVIDED HIGHWAYS, MULTI-LANE RAMPS, ONE-WAY STREETS, AND AS DIRECTED BY THE ENGINEER, EXCEPT WHERE ONLY ONE SHOULDER IS CLOSED (EX: CASE 11 ON SHEET 7).

8. ADDITIONAL TRAFFIC CONTROL DEVICES ADDRESSING FLAGGING, SPEED REDUCTION, ETC. WILL BE NECESSARY FOR SET-UP AND TAKE-DOWN OF MOST CASE APPLICATIONS; DAILY WORK SITE ACCESS; AND PAVEMENT MARKING REMOVAL AND INSTALLATION OPERATIONS.

9. BASED ON SIGHT DISTANCE AND OTHER CONSIDERATIONS, THE FINAL LOCATIONS OF SIGNS ARE SUBJECT TO APPROVAL OF THE ENGINEER.

10. IF CONSTRUCTION RELATED TRAFFIC CONGESTION BACKS UP BEYOND THE INSTALLED ADVANCE SIGN SEQUENCE, ADDITIONAL ADVANCE SIGNING SHALL BE PLACED BEYOND THE CONGESTION.

11. ALL SIGN MATERIAL SHALL BE SOUND AND DURABLE TO THE DEGREE NECESSARY FOR MAINTAINING EFFECTIVE AND NEAT APPEARING TRAFFIC CONTROLS, AND:

    a. SIGN PANELS MAY BE FABRICATED FROM PLYWOOD, STEEL, ALUMINUM, OR OTHER SUITABLE MATERIAL.
    b. REFLECTIVE SHEETING SHALL CONFORM TO ASTM D4956. THE TYPE SHALL BE AS DESCRIBED IN THE STANDARD SPECIFICATIONS AND/OR AS SHOWN ON THE PLANS.
    c. SYMBOLS AND LEGEND SHALL BE OF GOOD WORKMANSHIP (UNEVEN OR HAND LETTERING WILL NOT BE ACCEPTED).
    d. PORTABLE OR TEMPORARY MOUNTING SHALL NOT BE CONSTRUCTED OR WEIGHTED BY ANY METHOD OR MATERIAL THAT MAKES THEM HAZARDOUS TO TRAFFIC.
    e. CERTAIN POST SIZES AND SHAPES REQUIRE A "BREAK-AWAY" DEVICE. SEE THE APPLICABLE STANDARD PLAN. OTHER POST DESIGNS OR SYSTEMS REQUIRE THE SUBMITTAL OF AN FHWA LETTER OF ACCEPTANCE TO THE ENGINEER, AND MUST BE APPROVED BY THE ENGINEER PRIOR TO THEIR USE.

12. ALL CONSTRUCTION SIGN PLACEMENT SHALL BE IN ACCORDANCE WITH STANDARD PLAN "TYPICAL GROUND SIGN PLACEMENT" UNLESS OTHERWISE APPROVED.

    SIGNS APPROVED TO BE MOUNTED ON PORTABLE SUPPORTS, OR APPROPRIATE SIGNS MOUNTED ON BARRICADES, MAY BE AT LOWER HEIGHTS, BUT THE BOTTOM OF THE SIGNS SHALL NOT BE LESS THAN ONE FOOT ABOVE THE PAVEMENT ELEVATION.

13. SIGNS MOUNTED ON THE MEDIAN OF DIVIDED HIGHWAYS WHERE MEDIAN BARRIER IS IN PLACE MAY BE MOUNTED ON THE BARRIER WITH A SADDLE TYPE BRACKET. IF THE BRACKET ALLOWS THE SIGN PANEL TO BE TURNED PARALLEL TO THE ROADWAY, THE SIGN MAY REMAIN IN PLACE WHEN NOT APPLICABLE, BUT LAYING THE SIGN PANEL DOWN IN A HORIZONTAL POSITION IS NOT PERMITTED.

14. TRAFFIC CONES SHALL BE AT LEAST 28 INCHES IN HEIGHT. HOWEVER, THE MINIMUM SIZE SHALL BE 36 INCHES WHEN THEY ARE USED ON FREEWAYS AND EXPRESSWAYS, OR DURING NIGHT TIME WORKING HOURS. THEY SHOULD ALSO BE 36 INCHES WHEN USED ON OTHER HIGH SPEED ROADWAYS (45 MPH OR MORE) WITH AN ADT OF 6,000 OR MORE.

15. TYPE 1 BARRICADES SHALL NOT BE USED ON FREEWAYS, EXPRESSWAYS, OR OTHER HIGH SPEED ROADWAYS (55 MPH OR MORE).

16. WHEN TWO-WAY TRAFFIC IS PLACED ON ONE ROADWAY OF A NORMALLY DIVIDED HIGHWAY, OPPOSING TRAFFIC SHALL BE SEPARATED EITHER WITH CONCRETE BARRIER (TEMPORARY), OR WITH CHANNELIZING DEVICES APPROVED FOR THIS APPLICATION, THROUGHOUT THE LENGTH OF TWO-WAY OPERATION. THE TRANSITION ZONES SHALL HAVE CONCRETE BARRIER (TEMPORARY). THE BARRIER SHALL BE TIED TO AN EXISTING STRUCTURE OR GUARD RAIL, FLARED OR EXTENDED, TO MEET CLEAR ZONE REQUIREMENTS, OR FITTED WITH AN IMPACT ATTENUATION DEVICE.

17. CHANNELIZING DEVICE SPACING, IN FEET, SHALL BE AS FOLLOWS:
    a. FOR TAPERS AND TRANSITIONS, SPACING EQUALS THE NUMERICAL VALUE OF THE SPEED LIMIT. (e.g. 45 MPH = 45 FEET)
    b. FOR TANGENTS ALONG THE BUFFER SPACE OR WORK AREA, SPACING MAY NOT BE GREATER THAN TWO TIMES THE SPEED LIMIT. (e.g. 50 MPH = 50 FEET TO 100 FEET MAXIMUM)

18. FOR DETAILS ON BARRICADES, CONCRETE BARRIER (TEMPORARY), VERTICAL PANELS, AND FLASHING BEACON (PORTABLE), SEE THE APPLICABLE STANDARD PLANS.

19. FLOOD LIGHTS SHALL BE USED TO ILLUMINATE FLAGGER STATIONS DURING THE HOURS OF DARKNESS UNLESS OTHERWISE APPROVED. A TYPICAL LIGHT SHOULD PROVIDE THE FOLLOWING: A FULLY DIRECTIONAL SWIVEL MOUNT QUARTZ LIGHT SOURCE (500 WATT MINIMUM), SELF-SUPPORTING STAND WITH VARIABLE LIGHT HEIGHT FROM A MINIMUM OF EIGHT FEET ABOVE THE ROADWAY, AND A POWER SOURCE. IT SHALL ILLUMINATE THE STATION AREA AND A FLAGGER ESCAPE PATH, BUT SHALL NOT PRESENT ANY GLARE TO TRAFFIC.

20. FOR TEMPORARY PAVEMENT MARKINGS AND CONTROL POINTS FOR INSTALLING THOSE PAVEMENT MARKINGS FOR UNDIVIDED ROADWAYS THAT ARE BEING CONSTRUCTED UNDER TRAFFIC, FULL COMPLIANCE CENTER LINE, LANE LINE, AND EDGE LINE TEMPORARY MARKINGS SHALL BE IN PLACE AT THE END OF EACH WORK DAY IN ACCORDANCE WITH SECTION 627.03(d)2.

    FOR ADDITIONAL PAVEMENT MARKING DETAILS, SEE STANDARD PLAN "TYPICAL PAVEMENT MARKINGS".

21. BUFFER SPACE IS OPTIONAL. NEED MUST BE DETERMINED ON A PROJECT OR SITE SPECIFIC BASIS AS DIRECTED BY THE ENGINEER. WHEN A BUFFER SPACE IS USED, DIMENSIONS AND/OR DEVICES USED ARE TO BE INCORPORATED IN THE TRAFFIC CONTROL PLAN (TCP) OR THE CONTRACTOR'S METHOD OF HANDLING TRAFFIC (MHT).

22. ADDITIONAL VMS SIGNAGE SHOULD BE CONSIDERED AT LEAST A MILE IN ADVANCE OF THE SIGNING SHOWN IN THE DETAIL FOR ANY LANE CLOSURES ON INTERSTATE AND OTHER HIGH SPEED FACILITIES ESPECIALLY WHEN THE LEVEL OF SERVICE IS SIGNIFICANTLY REDUCED AS A RESULT OF CONSTRUCTION. THE LEGENDS SHOULD BE CHANGED TO ADVISE MOTORISTS OF UPCOMING TRAFFIC CONDITIONS AND TO ALERT THEM OF UPCOMING LANE USAGE.

    ADDITIONAL ADVANCE WARNING SIGNAGE IS ENCOURAGED IN ALL CASES WHERE TRAFFIC VOLUMES AND SPEEDS ARE HIGH AND/OR WHERE THERE ARE INFREQUENT EXITS. ADDITIONAL SIGNAGE IS ALSO ENCOURAGED IN LOCATIONS WHERE DRIVERS' LINE OF SIGHT TO ADVANCE WARNING SIGNS IS OBSTRUCTED.

23. WHEN ARROW BOARDS ARE USED TO CLOSE MULTIPLE LANES, A SEPARATE ARROW BOARD SHALL BE USED FOR EACH CLOSED LANE.

    IF ARROW BOARDS ARE USED FOR SHOULDER WORK, BLOCKING THE SHOULDER, FOR ROADSIDE WORK NEAR THE SHOULDER, OR FOR TEMPORARILY CLOSING ONE LANE ON A TWO-LANE, TWO-WAY ROADWAY, USE THE ARROW BOARDS ONLY IN THE CAUTION MODE.

24. RAISED PAVEMENT MARKERS MAY BE USED TO SUPPLEMENT TEMPORARY STRIPING DURING NON-SNOW PERIODS. THEIR USE IS ENCOURAGED ON HIGHER SPEED FACILITIES WHEN TRAFFIC IS BEING DIVERTED FROM ITS USUAL COURSE.

25. THE TYPICAL CASES DEPICTED IN THIS STANDARD REFLECT THE MINIMUM REQUIREMENTS, UNLESS AS OTHERWISE DIRECTED BY THE PROJECT PLANS AND SPECIFICATIONS, AND/OR THE PROJECT ENGINEER.

26. A SIGNIFICANT PROJECT IS DEFINED AS ONE THAT, ALONE OR IN COMBINATION WITH OTHER CONCURRENT PROJECTS NEARBY, IS ANTICIPATED TO CAUSE SUSTAINED WORK ZONE IMPACTS AT A LOCATION FOR THREE OR MORE CONSECUTIVE DAYS WITH EITHER INTERMITTENT OR CONTINUOUS LANE CLOSURES.

Sheet Revisions

	Date:	Comments
R-1	02/06/13	SHEET 13 - UPDATE TO 2009 MUTCD STD
R-2	02/26/13	SHEET 1 - UPDATE TO NOTE 1
R-3	02/27/13	SHEET 4 - UPDATE TAPER TO MUTCD STD
R-4	07/26/13	SHTS 9, 10, 15 & 20 - CORRECTED SIGN CODE DESIGNATION
R-5	**03/27/14**	SHTS 17 & 18 - UPDATED SIGNS AND TMA'S
R-6	**07/22/14**	SHEET 1 - UPDATE TO NOTE 20
R-7	**12/8/14**	SHEETS 17 TO 24 - ADDED AND RENUMBERED SHEET 22 - SIGN CODE UPDATE, W5-4D & W21-5a

Computer File Information

Creation Date: 07/04/12	Initials: KEN
Last Modification Date: 12/8/14	Initials: KEN
Full Path: www.coloradodot.info/library/traffic/traffic-s-standard-plans	
Drawing File Name: S-630-01_1of24.dgn	
CAD Ver.: MicroStation V8 Scale: Not to Scale	Units: English

Colorado Department of Transportation
4201 East Arkansas Avenue
Denver, Colorado 80222
Phone: (303) 757-9543
Fax: (303) 757-9219
Safety & Traffic Engineering Branch KCM/KEN

TRAFFIC CONTROLS FOR HIGHWAY CONSTRUCTION

Issued By: Safety & Traffic Engineering Branch July 4, 2012

STANDARD PLAN NO.

S-630-1

INDEX TO TYPICAL WORK ZONE CASES

TYPICAL CASE DESCRIPTION	CASE NO.	SHEET NO.
CLOSURE OF ONE ROADWAY, 4-LANE HIGHWAY	1	3
CLOSURE OF HALF OF 4-LANE UNDIVIDED HIGHWAY	2	4
ROAD CLOSURE, USE OF ADJACENT SHOULDERS	3	
ROAD CLOSURE, BYPASS DETOUR PROVIDED	4	5
LANE #1 CLOSURE, MULTI-LANE FREEWAY	5	
LANE #2 CLOSURE, MULTI-LANE FREEWAY	6	6
LANE #3 CLOSURE, MULTI-LANE FREEWAY	7	
LANE #4 CLOSURE, MULTI-LANE FREEWAY	8	
CENTER LANE CLOSURE - MULTI-LANE FREEWAY	9	7
ONE LANE CLOSE - 4-LANE DIVIDED HIGHWAY	10	
SHOULDER WORK - FREEWAY/EXPRESSWAY	11	
TRAFFIC CONTROL ON FREEWAY NEAR AN OFF-RAMP	12	8
TRAFFIC CONTROL ON FREEWAY BEFORE AN ON-RAMP	13	
TRAFFIC CONTROL ON FREEWAY ALLOWING ACCESS FROM ON-RAMP	14	
BLASTING ZONE	15	9
RAMP CONSTRUCTION WHERE PARTIAL RAMP IS CLOSED	16	
LANE CLOSURE, 2-LANE HIGHWAY, AT CURVE	17	
TRAFFIC CONTROL AROUND A WORK AREA NEAR AN INTERSECTION, ONE LANE CLOSED	18	10
TRAFFIC CONTROL AROUND A WORK AREA NEAR AN INTERSECTION	19	
TYPICAL SIGNING FOR ROAD CLOSURE	20	
FULL CLOSURE, MULTI-LANE FREEWAY	21	11
CONTINUOUS LANE RAMP CLOSURE, MULTI-LANE FREEWAY	22	
SIMPLE RAMP CLOSURE, MULTI-LANE FREEWAY	23	
"FINES DOUBLE IN WORK ZONE" SIGNING (WITH SPEED REDUCTION)	24	12
SHIFTING OF ONE ROADWAY ON 4-LANE DIVIDED HIGHWAY	25	13
SHOULDER WORK - FREEWAY/EXPRESSWAY w/ 65 MPH SPEED LIMIT	26	14
SHOULDER WORK - FREEWAY/EXPRESSWAY w/ 75 MPH SPEED LIMIT	27	
ROCK SCALING - ROAD CLOSURE, 4-LANE DIVIDED HIGHWAY	28	15

TYPICAL CASE DESCRIPTION	CASE NO.	SHEET NO.
LATE MERGING - ONE LANE CLOSED, 4-LANE DIVIDED HIGHWAY	29	16
MOBILE PAVEMENT MARKING ZONE, MOBILE SHOULDER CLOSURE ON 2-LANE UNDIVIDED HIGHWAY	30	17
MOBILE PAVEMENT MARKING ZONE, CENTERLINE STRIPING ON 2-LANE UNDIVIDED HIGHWAY	31	
MOBILE PAVEMENT MARKING ZONE, LANE LINE STRIPING - CENTER LANE OPERATIONS ON MULTI-LANE DIVIDED HIGHWAY	32	18
MOBILE PAVEMENT MARKING ZONE, MOBILE RAMP CLOSURE - EXPRESSWAY/FREEWAY	33	
MOBILE OPERATION OF LANE CLOSURE OF MULTI-LANE HIGHWAY (NOT FOR USE ON FREEWAYS)	34	19
MOBILE OPERATION OF LANE CLOSURE OF MULTI-LANE HIGHWAY	35	

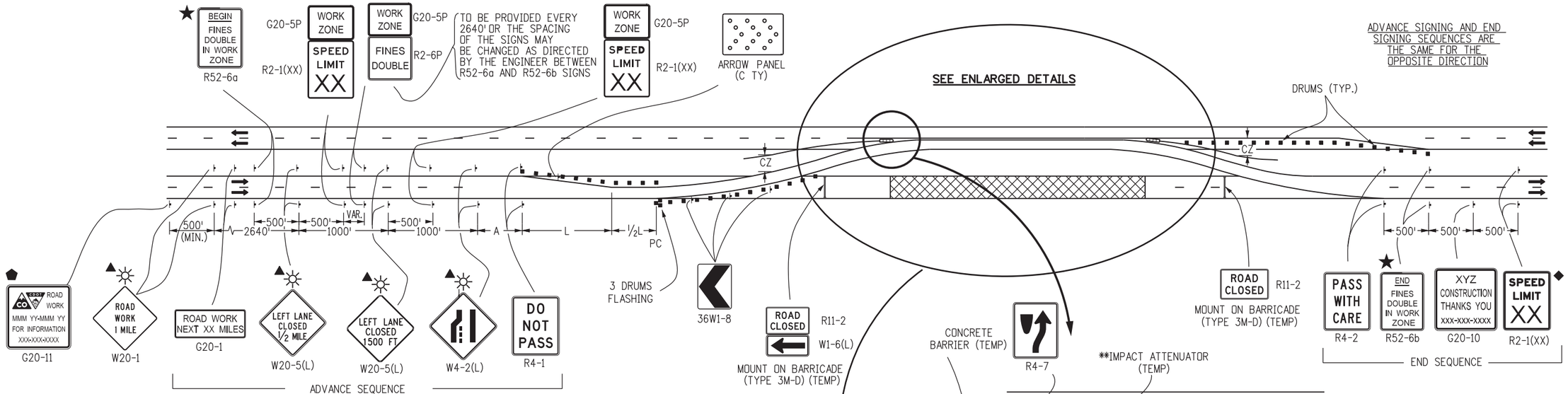

TYPICAL 2-WAY ZONE STRIPING

LEGEND

- ▪ CHANNELIZING DEVICE: FOR TYPE OF DEVICE TO BE USED, SEE SCHEDULE OF TRAFFIC CONTROL DEVICES INCLUDED IN THE PLANS. DRUMS OR VERTICAL PANELS SHALL BE USED TO DELINEATE THE LANE CLOSURE TAPER.
- TYPE III BARRICADE
- CONCRETE BARRICADE (TEMPORARY)
- FLAGGER
- DIRECTION OF TRAVEL
- WORK AREA
- L TRANSITION TAPER LENGTH:
  - L = MINIMUM LENGTH OF TAPER
  - SPEED 45 MPH OR MORE: $L = S \times W$
  - SPEED 40 MPH OR LESS: $L = \frac{WS^2}{60}$
  - S = NUMERICAL VALUE OF SPEED LIMIT OR 85 PERCENTILE SPEED
  - W = WIDTH OF OFFSET
- ADVANCE WARNING FLASHING OR SEQUENCING ARROW PANEL
- A = 100' (URBAN LOW SPEED)
  - 350' (URBAN HIGH SPEED)
  - 500' (RURAL)
  - 1,000' (EXPRESSWAY / FREEWAY)
- CZ CLEAR ZONE (SEE GENERAL NOTE 16 ON SHEET 1).
- ▲ THESE DEVICES ARE OPTIONAL. THEIR NEED SHALL BE DETERMINED BY DETOUR DESIGN AND/OR SCOPE OF CONSTRUCTION ACTIVITY, AND ARE REQUIRED WHEN THEY ARE INCLUDED IN THE SCHEDULE OF CONSTRUCTION CONTROL DEVICES.
- VAR. BUFFER SPACE (SEE GENERAL NOTE 21 ON SHEET 1).
- IMPACT ATTENUATOR AS DETAILED ON THE PLANS
- FLASHING BEACON

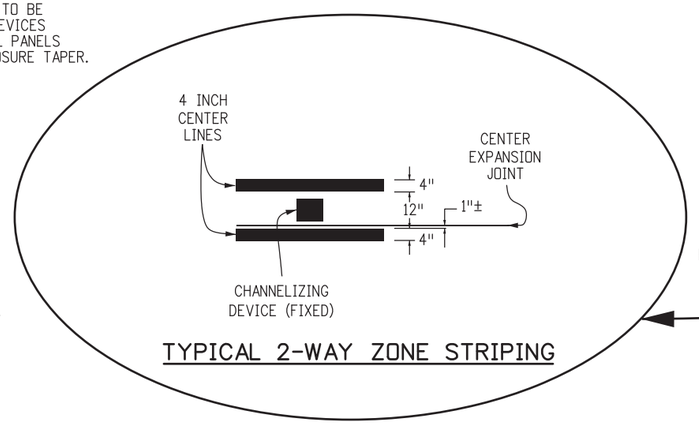

TYPICAL 2-WAY ZONE STRIPING

- ◆ THESE DEVICES ARE NOT OPTIONAL IF THE POSTED SPEED LIMIT IN THE WORK ZONE IS REDUCED.
- * THESE ITEMS ARE NOT REQUIRED WHEN CONTINUOUS CONCRETE BARRIER IS USED FOR CHANNELIZATION.
- ** SEE GENERAL NOTE 16 ON SHEET 1.
- ⬟ G20-11 SIGN IS REQUIRED IF SECTION 626 "PUBLIC INFORMATION SERVICES" PROJECT SPECIAL PROVISION WORKSHEET SPECIFICATION IS REQUIRED WITH PROJECT.
- ★ SEE FINES DOUBLE SIGNING NOTES ON SHEET 12.

CASE NO. 1
TYPICAL APPLICATION
CLOSURE OF ONE ROADWAY 4-LANE DIVIDED HIGHWAY

Computer File Information			Sheet Revisions	
Creation Date: 07/04/12	Initials: RRR		Date:	Comments
Last Modification Date:	Initials:	R-X		
Full Path: www.coloradodot.info/library/traffic/traffic-s-standard-plans		R-X		
Drawing File Name: S-630-01_3of24.dgn		R-X		
CAD Ver.: MicroStation V8 Scale: Not to Scale	Units: English	R-X		

Colorado Department of Transportation
4201 East Arkansas Avenue
Denver, Colorado 80222
Phone: (303) 757-9543
Fax: (303) 757-9219
Safety & Traffic Engineering Branch KCM/KEN

TRAFFIC CONTROLS FOR HIGHWAY CONSTRUCTION

Issued By: Safety & Traffic Engineering Branch July 4, 2012

STANDARD PLAN NO.
S-630-1
Sheet No. 3 of 24

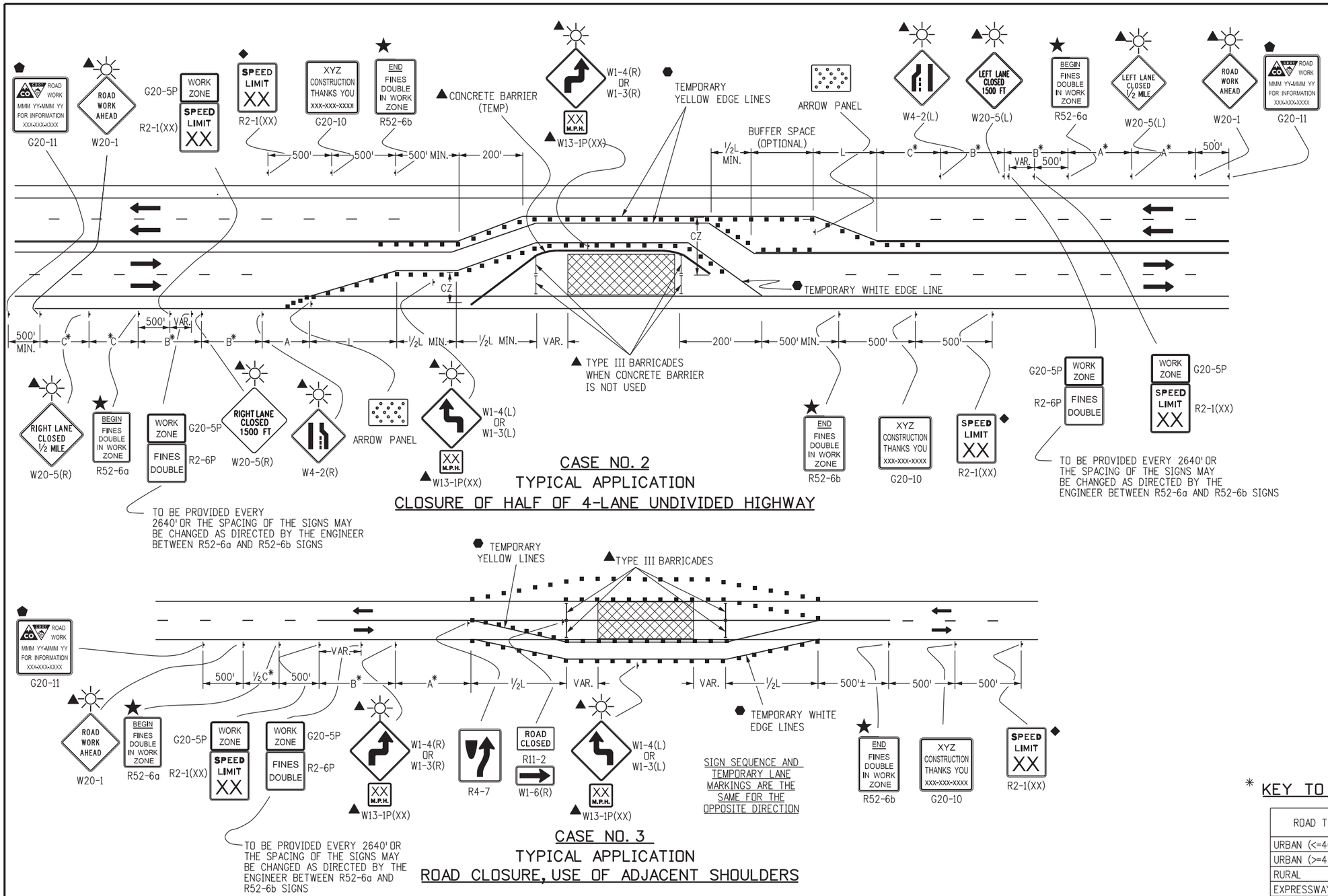

CASE NO. 2
TYPICAL APPLICATION
CLOSURE OF HALF OF 4-LANE UNDIVIDED HIGHWAY

SIGN SEQUENCE AND TEMPORARY LANE MARKINGS ARE THE SAME FOR THE OPPOSITE DIRECTION

CASE NO. 3
TYPICAL APPLICATION
ROAD CLOSURE, USE OF ADJACENT SHOULDERS

LEGEND

- ■ CHANNELIZING DEVICE: FOR TYPE OF DEVICE TO BE USED, SEE SCHEDULE OF TRAFFIC CONTROL DEVICES INCLUDED IN THE PLANS. DRUMS OR VERTICAL PANELS SHALL BE USED TO DELINEATE THE LANE CLOSURE TAPER.
- TYPE III BARRICADE
- FLAGGER
- DIRECTION OF TRAVEL
- WORK AREA
- L TRANSITION TAPER LENGTH:
  - L = MINIMUM LENGTH OF TAPER
  - SPEED 45 MPH OR MORE: $L = S \times W$
  - SPEED 40 MPH OR LESS: $L = \frac{WS^2}{60}$
  - S = NUMERICAL VALUE OF SPEED LIMIT OR 85 PERCENTILE SPEED
  - W = WIDTH OF OFFSET
  - SHOULDER TAPER = 1/3 L
- ADVANCE WARNING FLASHING OR SEQUENCING ARROW PANEL.
- A = 100' (URBAN LOW SPEED)
  350' (URBAN HIGH SPEED)
  500' (RURAL)
  1,000' (EXPRESSWAY / FREEWAY)
- CZ CLEAR ZONE (SEE GENERAL NOTE 16 ON SHEET 1)
- ▲ THESE DEVICES ARE OPTIONAL. THEIR NEED SHALL BE DETERMINED BY DETOUR DESIGN AND/OR SCOPE OF CONSTRUCTION ACTIVITY, AND ARE REQUIRED WHEN THEY ARE INCLUDED IN THE SCHEDULE OF CONSTRUCTION CONTROL DEVICES.
- ◆ THESE DEVICES ARE NOT OPTIONAL IF THE POSTED SPEED LIMIT IN THE WORK ZONE IS REDUCED.
- VAR. BUFFER SPACE (SEE GENERAL NOTE 21 ON SHEET 1).
- ⬢ REQUIRED WHEN WORK OCCUPIES THE LOCATION FOR MORE THAN 3 DAYS.
- ⬟ G20-11 SIGN IS REQUIRED WHEN SECTION 626 "PUBLIC INFORMATION SERVICES" PROJECT SPECIAL PROVISION WORKSHEET SPECIFICATION IS REQUIRED WITH PROJECT.
- FLASHING BEACON
- ★ SEE FINES DOUBLE SIGNING NOTES ON SHEET 12.

* KEY TO ADVANCE SIGNING DISTANCES

ROAD TYPE	DISTANCE BETWEEN SIGNS		
	A	B	C
URBAN (<=40 MPH)	100	100	100
URBAN (>=45 MPH)	350	350	350
RURAL	500	500	500
EXPRESSWAY/FREEWAY	1000	1500	2640

Computer File Information	
Creation Date: 07/04/12	Initials: RRR
Last Modification Date: 02/27/13	Initials: KEN
Full Path: www.coloradodot.info/library/traffic/traffic-s-standard-plans	
Drawing File Name: S-630-01_4of24.dgn	
CAD Ver.: MicroStation V8 Scale: Not to Scale	Units: English

	Sheet Revisions	
	Date:	Comments
R-3	02/27/13	UPDATE TAPER TO MUTCD STD
R-X		
R-X		
R-X		

Colorado Department of Transportation
4201 East Arkansas Avenue
Denver, Colorado 80222
Phone: (303) 757-9543
Fax: (303) 757-9219
Safety & Traffic Engineering Branch KCM/KEN

TRAFFIC CONTROLS FOR HIGHWAY CONSTRUCTION

Issued By: Safety & Traffic Engineering Branch July 4, 2012

STANDARD PLAN NO.
S-630-1
Sheet No. 4 of 24

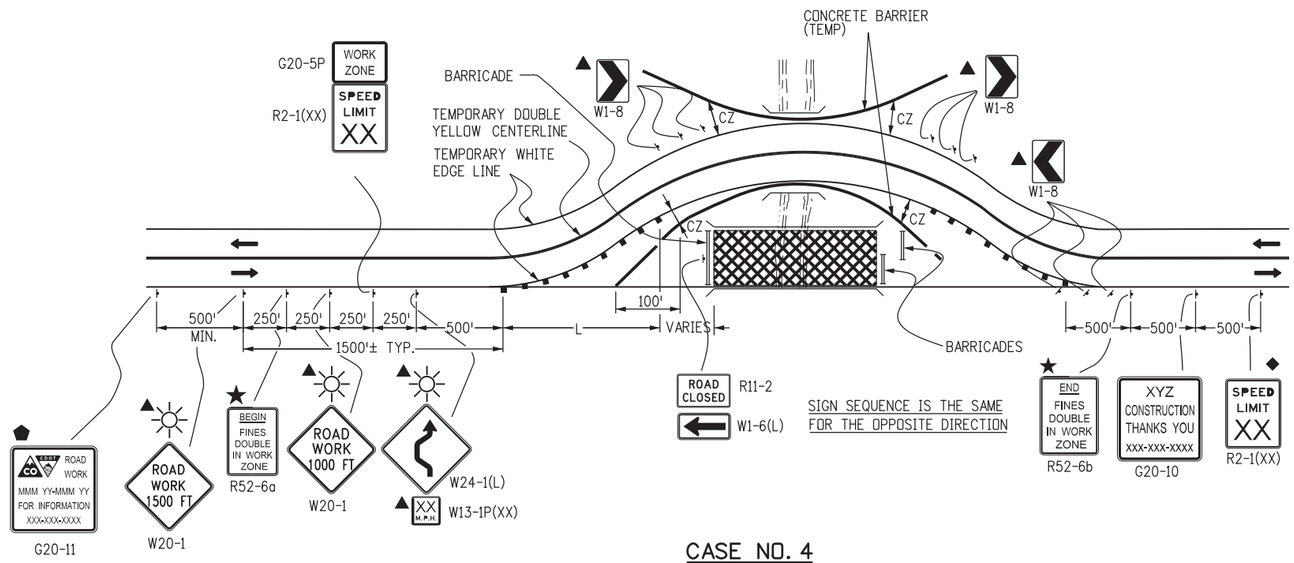

CASE NO. 4
TYPICAL APPLICATION
ROAD CLOSURE, BYPASS DETOUR PROVIDED

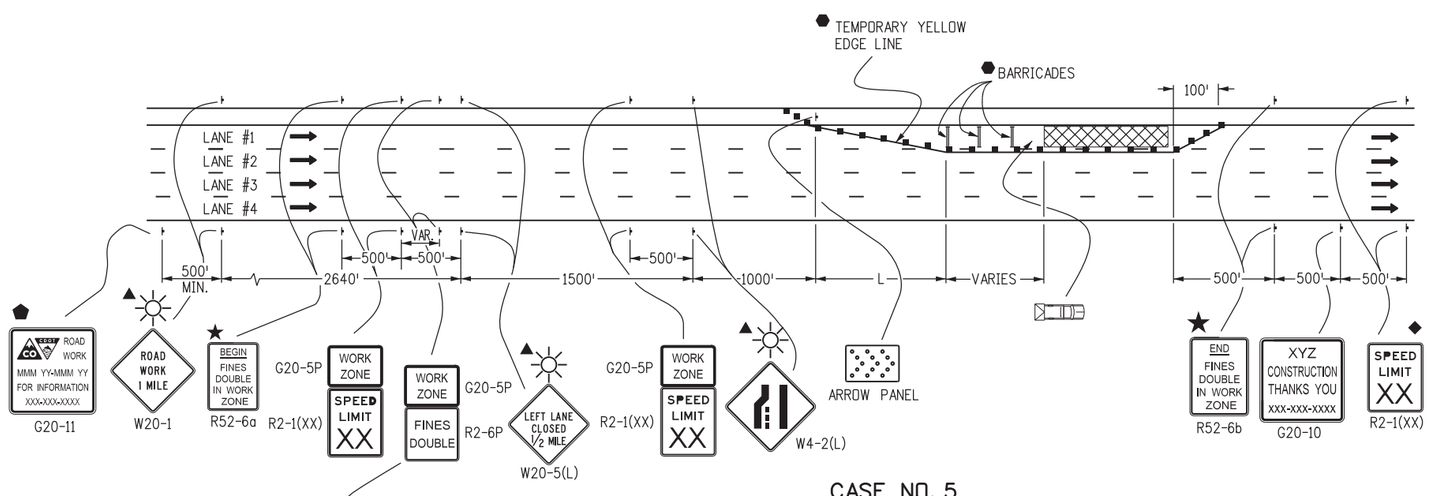

CASE NO. 5
TYPICAL APPLICATION
LANE #1 CLOSURE, MULTI-LANE FREEWAY

LEGEND

- ▪ CHANNELIZING DEVICE: FOR TYPE OF DEVICE TO BE USED, SEE SCHEDULE OF TRAFFIC CONTROL DEVICES INCLUDED IN THE PLANS. DRUMS OR VERTICAL PANELS SHALL BE USED TO DELINEATE THE LANE CLOSURE TAPER.
- TYPE III BARRICADE
- CONCRETE BARRIER (TEMPORARY)
- FLAGGER
- DIRECTION OF TRAVEL
- WORK AREA
- L — TRANSITION TAPER LENGTH:
  - L = MINIMUM LENGTH OF TAPER
  - SPEED 45 MPH OR MORE: $L = S \times W$
  - SPEED 40 MPH OR LESS: $L = \frac{WS^2}{60}$
  - S = NUMERICAL VALUE OF SPEED LIMIT OR 85 PERCENTILE SPEED
  - W = WIDTH OF OFFSET
  - SHOULDER TAPER = 1/3 L
- ADVANCE WARNING FLASHING OR SEQUENCING ARROW PANEL
- CZ — CLEAR ZONE (SEE GENERAL NOTE 16 ON SHEET 1).
- ▲ THESE DEVICES ARE OPTIONAL. THEIR NEED SHALL BE DETERMINED BY DETOUR DESIGN AND/OR SCOPE OF CONSTRUCTION ACTIVITY, AND ARE REQUIRED WHEN THEY ARE INCLUDED IN THE SCHEDULE OF CONSTRUCTION CONTROL DEVICES.
- ◆ THESE DEVICES ARE NOT OPTIONAL IF THE POSTED SPEED LIMIT IN THE WORK ZONE IS REDUCED.
- VARIES — BUFFER SPACE (SEE GENERAL NOTE 21 ON SHEET 1).
- ⬢ REQUIRED WHEN WORK OCCUPIES THE LOCATION FOR MORE THAN 3 DAYS.
- ⬟ G20-11 SIGN IS REQUIRED WHEN SECTION 626 "PUBLIC INFORMATION SERVICES" PROJECT SPECIAL PROVISION WORKSHEET SPECIFICATION IS REQUIRED WITH PROJECT.
- TRUCK MOUNTED ATTENUATOR (TMA)
- FLASHING BEACON
- ★ SEE FINES DOUBLE SIGNING NOTES ON SHEET 12.

Computer File Information		Sheet Revisions	
Creation Date: 07/04/12 Initials: RRR		Date:	Comments
Last Modification Date: Initials:	R-X		
Full Path: www.coloradodot.info/library/traffic/traffic-s-standard-plans	R-X		
Drawing File Name: S-630-01_5of24.dgn	R-X		
CAD Ver.: MicroStation V8 Scale: Not to Scale Units: English	R-X		

Colorado Department of Transportation
4201 East Arkansas Avenue
Denver, Colorado 80222
Phone: (303) 757-9543
Fax: (303) 757-9219
Safety & Traffic Engineering Branch KCM/KEN

TRAFFIC CONTROLS FOR HIGHWAY CONSTRUCTION

Issued By: Safety & Traffic Engineering Branch July 4, 2012

STANDARD PLAN NO.
S-630-1
Sheet No. 5 of 24

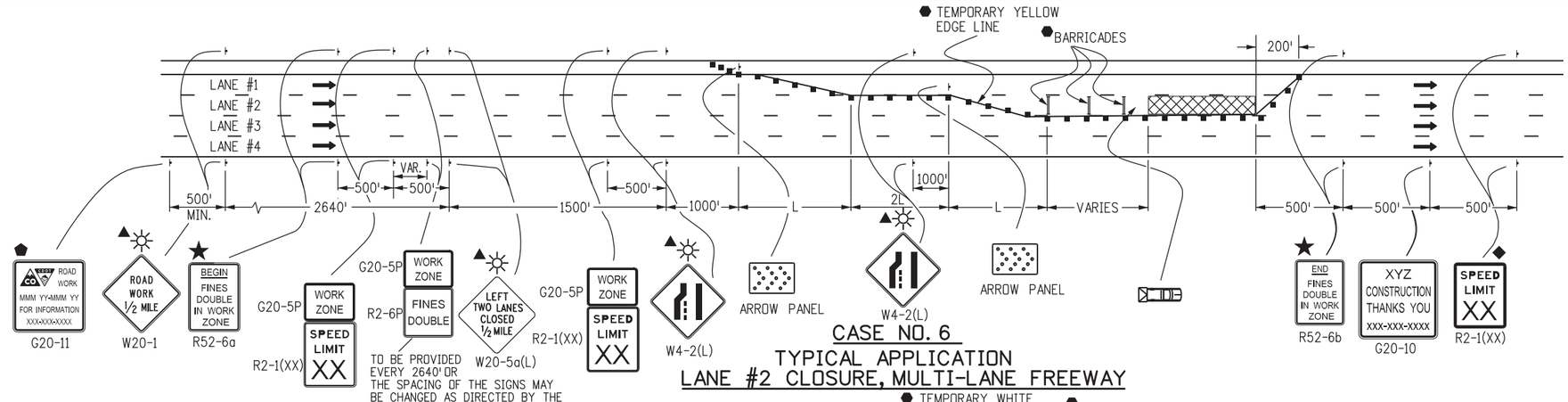

CASE NO. 6
TYPICAL APPLICATION
LANE #2 CLOSURE, MULTI-LANE FREEWAY

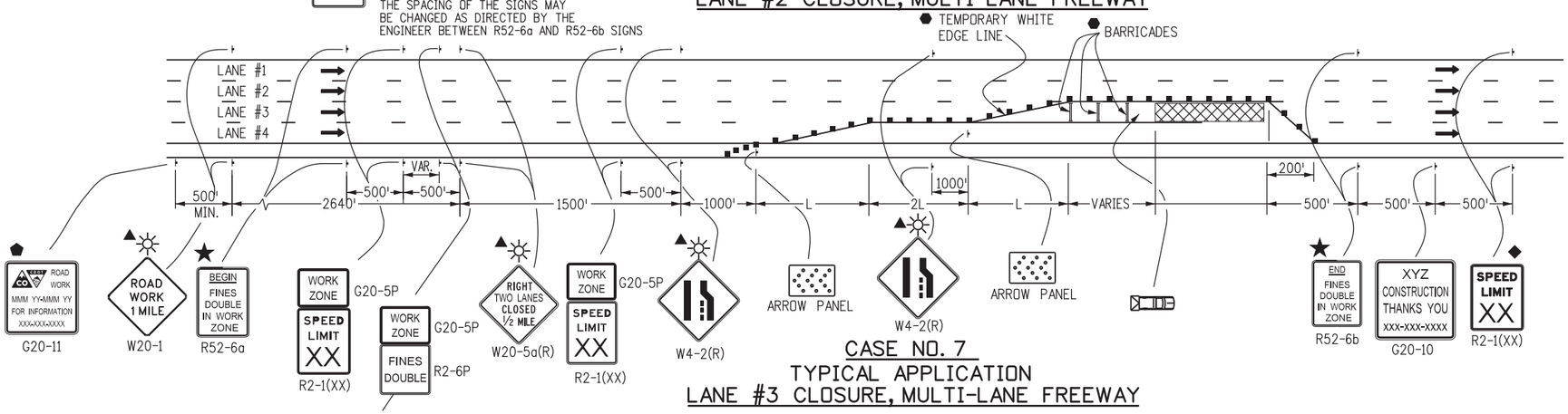

CASE NO. 7
TYPICAL APPLICATION
LANE #3 CLOSURE, MULTI-LANE FREEWAY

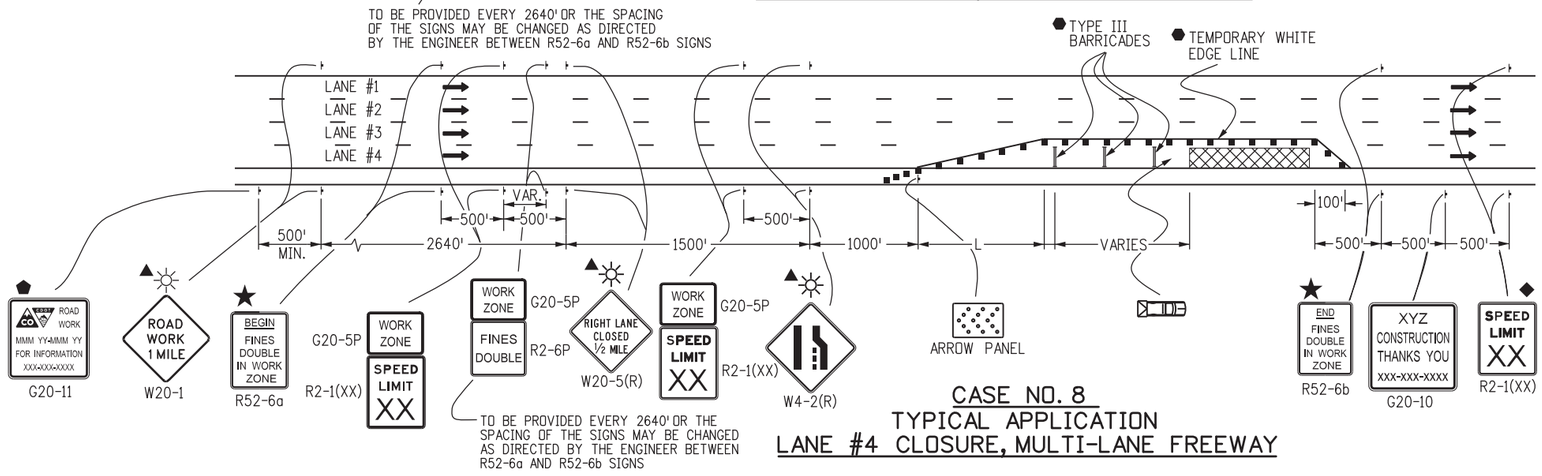

CASE NO. 8
TYPICAL APPLICATION
LANE #4 CLOSURE, MULTI-LANE FREEWAY

LEGEND

- ■ CHANNELIZING DEVICE: FOR TYPE OF DEVICE TO BE USED, SEE SCHEDULE OF TRAFFIC CONTROL DEVICES INCLUDED IN THE PLANS. DRUMS OR VERTICAL PANELS SHALL BE USED TO DELINEATE THE LANE CLOSURE TAPER.
- TYPE III BARRICADE
- CONCRETE BARRIER (TEMPORARY)
- FLAGGER
- DIRECTION OF TRAVEL
- WORK AREA
- L — TRANSITION TAPER LENGTH:
  - L = MINIMUM LENGTH OF TAPER
  - SPEED 45 MPH OR MORE: $L = S \times W$
  - SPEED 40 MPH OR LESS: $L = \frac{WS^2}{60}$
  - S = NUMERICAL VALUE OF SPEED LIMIT OR 85 PERCENTILE SPEED
  - W = WIDTH OF OFFSET
  - SHOULDER TAPER = 1/3 L
- ADVANCE WARNING FLASHING OR SEQUENCING ARROW PANEL
- CZ — CLEAR ZONE (SEE GENERAL NOTE 16 ON SHEET 1).
- ▲ THESE DEVICES ARE OPTIONAL. THEIR NEED SHALL BE DETERMINED BY DETOUR DESIGN AND/OR SCOPE OF CONSTRUCTION ACTIVITY, AND ARE REQUIRED WHEN THEY ARE INCLUDED IN THE SCHEDULE OF CONSTRUCTION CONTROL DEVICES.
- ◆ THESE DEVICES ARE NOT OPTIONAL IF THE POSTED SPEED LIMIT IN THE WORK ZONE IS REDUCED.
- VARIES — BUFFER SPACE (SEE GENERAL NOTE 21 ON SHEET 1).
- ⬢ REQUIRED WHEN WORK OCCUPIES THE LOCATION FOR MORE THAN 3 DAYS.
- ⬟ G20-11 SIGN IS REQUIRED WHEN SECTION 626 "PUBLIC INFORMATION SERVICES" PROJECT SPECIAL PROVISION WORKSHEET SPECIFICATION IS REQUIRED WITH PROJECT.
- TRUCK MOUNTED ATTENUATOR (TMA)
- FLASHING BEACON
- ★ SEE FINES DOUBLE SIGNING NOTES ON SHEET 12.

Computer File Information		Sheet Revisions	
Creation Date: 07/04/12 Initials: RRR		Date:	Comments
Last Modification Date: Initials:	R-X		
Full Path: www.coloradodot.info/library/traffic/traffic-s-standard-plans	R-X		
Drawing File Name: S-630-01_6of24.dgn	R-X		
CAD Ver.: MicroStation V8 Scale: Not to Scale Units: English	R-X		

Colorado Department of Transportation
4201 East Arkansas Avenue
Denver, Colorado 80222
Phone: (303) 757-9543
Fax: (303) 757-9219
Safety & Traffic Engineering Branch KCM/KEN

TRAFFIC CONTROLS FOR HIGHWAY CONSTRUCTION

Issued By: Safety & Traffic Engineering Branch July 4, 2012

STANDARD PLAN NO.
S-630-1
Sheet No. 6 of 24

-?-

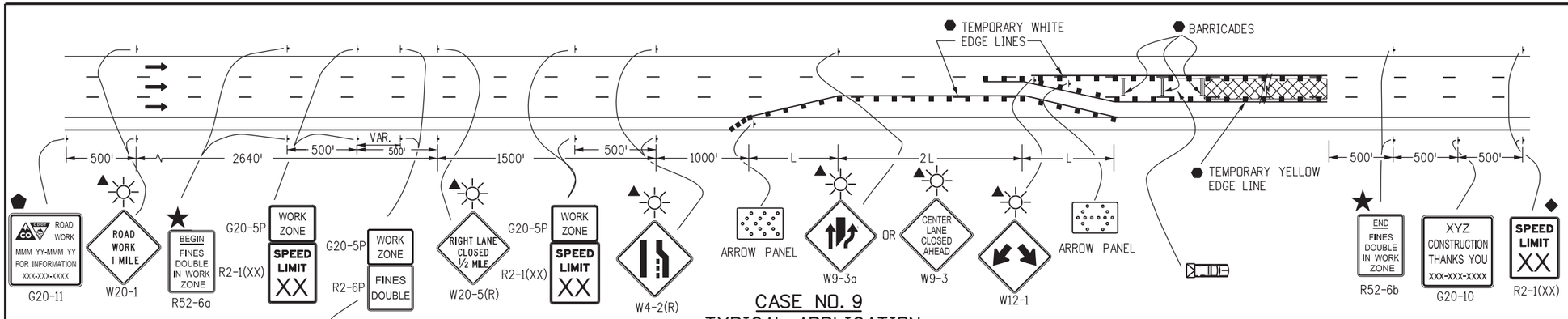

CASE NO. 9
TYPICAL APPLICATION
CENTER LANE CLOSURE - MULTI-LANE FREEWAY

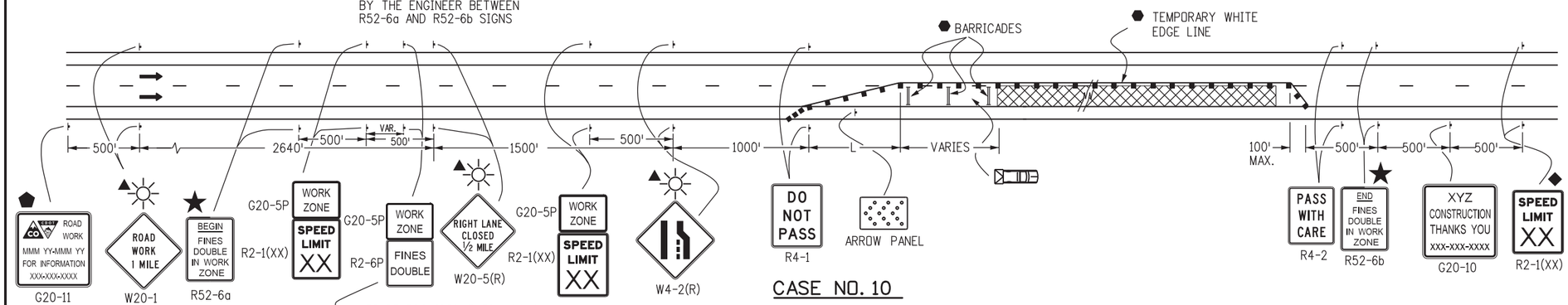

CASE NO. 10
TYPICAL APPLICATION
ONE LANE CLOSED - 4-LANE DIVIDED HIGHWAY

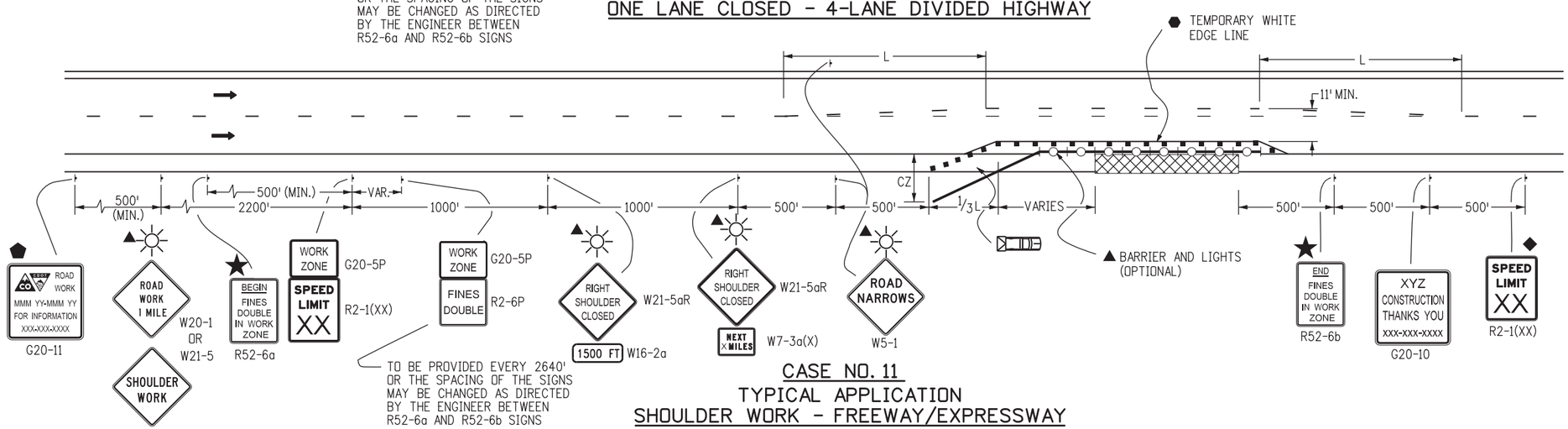

CASE NO. 11
TYPICAL APPLICATION
SHOULDER WORK - FREEWAY/EXPRESSWAY

LEGEND

- CHANNELIZING DEVICE: FOR TYPE OF DEVICE TO BE USED, SEE SCHEDULE OF TRAFFIC CONTROL DEVICES INCLUDED IN THE PLANS. DRUMS OR VERTICAL PANELS SHALL BE USED TO DELINEATE THE LANE CLOSURE TAPER.
- TYPE III BARRICADE
- CONCRETE BARRIER (TEMPORARY)
- FLAGGER
- DIRECTION OF TRAVEL
- WORK AREA

L TRANSITION TAPER LENGTH:

L = MINIMUM LENGTH OF TAPER

SPEED 45 MPH OR MORE: $L = S \times W$

SPEED 40 MPH OR LESS: $L = \frac{WS^2}{60}$

S = NUMERICAL VALUE OF SPEED LIMIT OR 85 PERCENTILE SPEED

W = WIDTH OF OFFSET

SHOULDER TAPER = 1/3 L

- ADVANCE WARNING FLASHING OR SEQUENCING ARROW PANEL
- CZ — CLEAR ZONE (SEE GENERAL NOTE 16 ON SHEET 1).
- ▲ THESE DEVICES ARE OPTIONAL. THEIR NEED SHALL BE DETERMINED BY DETOUR DESIGN AND/OR SCOPE OF CONSTRUCTION ACTIVITY, AND ARE REQUIRED WHEN THEY ARE INCLUDED IN THE SCHEDULE OF CONSTRUCTION CONTROL DEVICES.
- ◆ THESE DEVICES ARE NOT OPTIONAL IF THE POSTED SPEED LIMIT IN THE WORK ZONE IS REDUCED.
- FLASHING BEACON
- VARIES — BUFFER SPACE (SEE GENERAL NOTE 21 ON SHEET 1).
- REQUIRED WHEN WORK OCCUPIES THE LOCATION FOR MORE THAN 3 DAYS.
- G20-11 SIGN IS REQUIRED WHEN SECTION 626 "PUBLIC INFORMATION SERVICES" PROJECT SPECIAL PROVISION WORKSHEET SPECIFICATION IS REQUIRED WITH PROJECT.
- TRUCK MOUNTED ATTENUATOR (TMA)
- CONCRETE BARRIER (TEMPORARY) WITH LIGHTS
- ★ SEE FINES DOUBLE SIGNING NOTES ON SHEET 12.

Computer File Information	
Creation Date: 07/04/12	Initials: RRR
Last Modification Date:	Initials:
Full Path: www.coloradodot.info/library/traffic/traffic-s-standard-plans	
Drawing File Name: S-630-01_7of24.dgn	
CAD Ver.: MicroStation V8 Scale: Not to Scale	Units: English

Sheet Revisions	
Date:	Comments
R-X	
R-X	
R-X	
R-X	

Colorado Department of Transportation
4201 East Arkansas Avenue
Denver, Colorado 80222
Phone: (303) 757-9543
Fax: (303) 757-9219
Safety & Traffic Engineering Branch KCM/KEN

TRAFFIC CONTROLS FOR HIGHWAY CONSTRUCTION

Issued By: Safety & Traffic Engineering Branch July 4, 2012

STANDARD PLAN NO.

S-630-1

Sheet No. 7 of 24 92

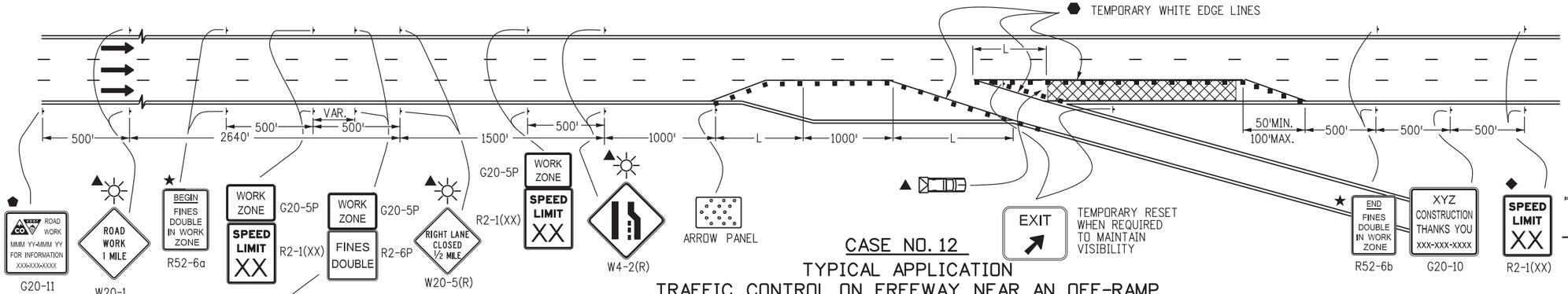

CASE NO. 12
TYPICAL APPLICATION
TRAFFIC CONTROL ON FREEWAY NEAR AN OFF-RAMP

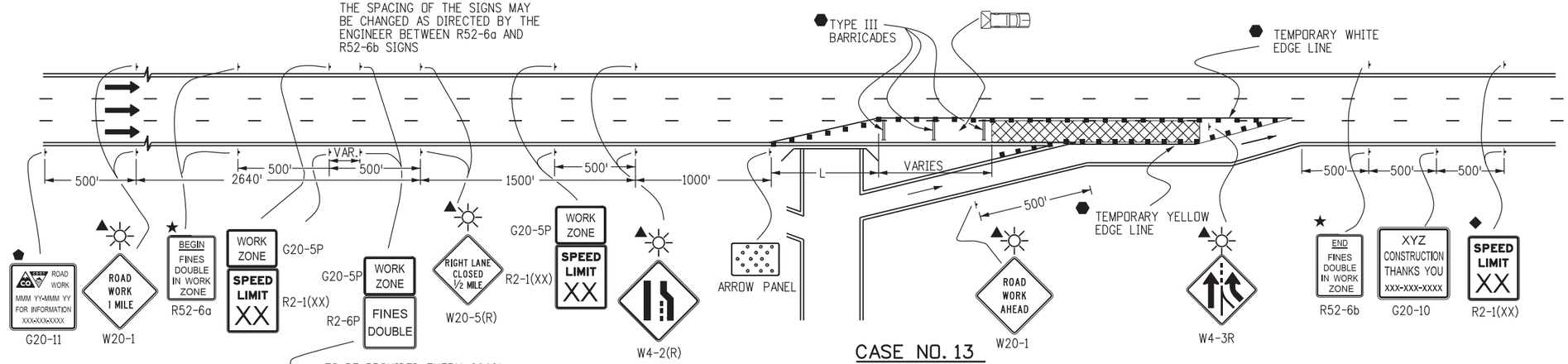

CASE NO. 13
TYPICAL APPLICATION - TRAFFIC CONTROL ON FREEWAY BEFORE AN ON-RAMP

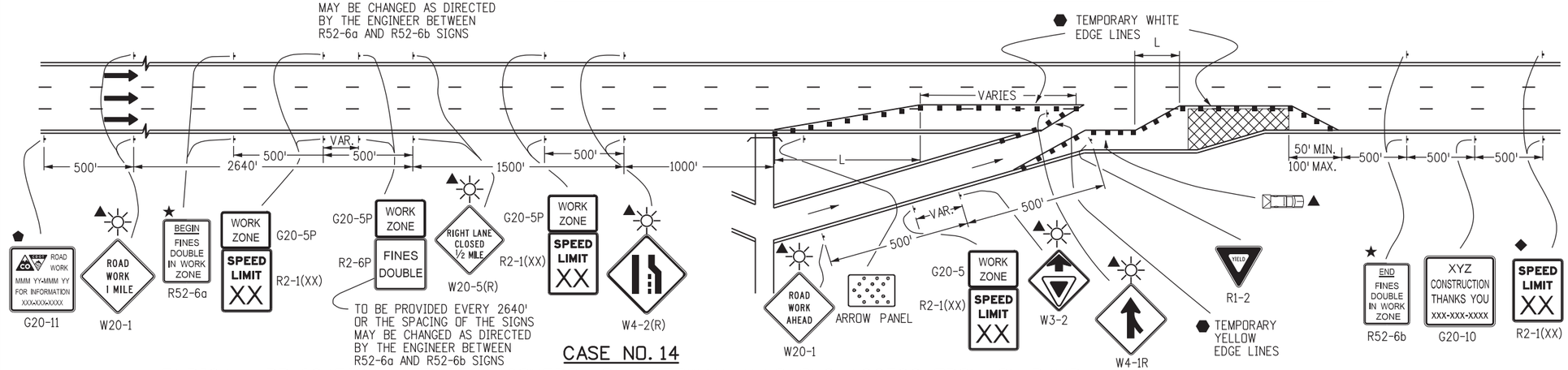

CASE NO. 14
TYPICAL APPLICATION - TRAFFIC CONTROL ON FREEWAY ALLOWING ACCESS FROM ON-RAMP

LEGEND

- CHANNELIZING DEVICE: FOR TYPE OF DEVICE TO BE USED, SEE SCHEDULE OF TRAFFIC CONTROL DEVICES INCLUDED IN THE PLANS. DRUMS OR VERTICAL PANELS SHALL BE USED TO DELINEATE THE LANE CLOSURE TAPER.
- TYPE III BARRICADE
- CONCRETE BARRIER (TEMPORARY)
- FLAGGER
- DIRECTION OF TRAVEL
- WORK AREA

L TRANSITION TAPER LENGTH:

L = MINIMUM LENGTH OF TAPER

SPEED 45 MPH OR MORE: $L = S \times W$

SPEED 40 MPH OR LESS: $L = \frac{WS^2}{60}$

S = NUMERICAL VALUE OF SPEED LIMIT OR 85 PERCENTILE SPEED

W = WIDTH OF OFFSET

SHOULDER TAPER = 1/3 L

- ADVANCE WARNING FLASHING OR SEQUENCING ARROW PANEL
- CZ CLEAR ZONE (SEE GENERAL NOTE 16 ON SHEET 1).
- ▲ THESE DEVICES ARE OPTIONAL. THEIR NEED SHALL BE DETERMINED BY DETOUR DESIGN AND/OR SCOPE OF CONSTRUCTION ACTIVITY, AND ARE REQUIRED WHEN THEY ARE INCLUDED IN THE SCHEDULE OF CONSTRUCTION CONTROL DEVICES.
- ◆ THESE DEVICES ARE NOT OPTIONAL IF THE POSTED SPEED LIMIT IN THE WORK ZONE IS REDUCED.
- VARIES BUFFER SPACE (SEE GENERAL NOTE 21).
- ⬢ REQUIRED WHEN WORK OCCUPIES THE LOCATION FOR MORE THAN 3 DAYS.
- ⬟ G20-11 SIGN IS REQUIRED WHEN SECTION 626 "PUBLIC INFORMATION SERVICES" PROJECT SPECIAL PROVISION WORKSHEET SPECIFICATION IS REQUIRED WITH PROJECT.
- TRUCK MOUNTED ATTENUATOR (TMA)
- FLASHING BEACON
- ★ SEE FINES DOUBLE SIGNING NOTES ON SHEET 12.

Computer File Information		Sheet Revisions	
Creation Date: 07/04/12 Initials: KEN		Date:	Comments
Last Modification Date: Initials:	R-X		
Full Path: www.coloradodot.info/library/traffic/traffic-s-standard-plans	R-X		
Drawing File Name: S-630-01_8of24.dgn	R-X		
CAD Ver.: MicroStation V8 Scale: Not to Scale Units: English	R-X		

Colorado Department of Transportation
4201 East Arkansas Avenue
Denver, Colorado 80222
Phone: (303) 757-9543
Fax: (303) 757-9219
Safety & Traffic Engineering Branch KCM/KEN

TRAFFIC CONTROLS FOR HIGHWAY CONSTRUCTION

Issued By: Safety & Traffic Engineering Branch July 4, 2012

STANDARD PLAN NO.
S-630-1
Sheet No. 8 of 24

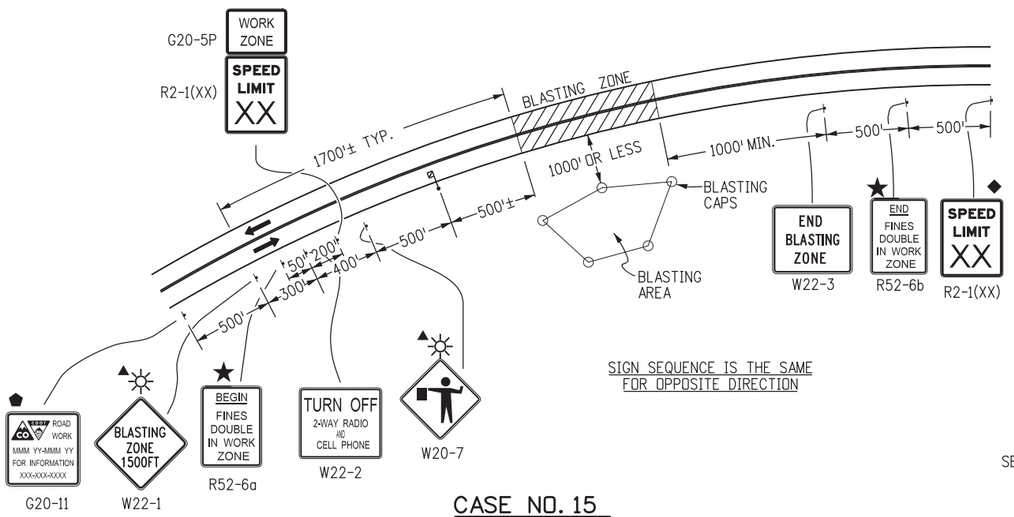

SIGN SEQUENCE IS THE SAME FOR OPPOSITE DIRECTION

CASE NO. 15
TYPICAL APPLICATION
BLASTING ZONE

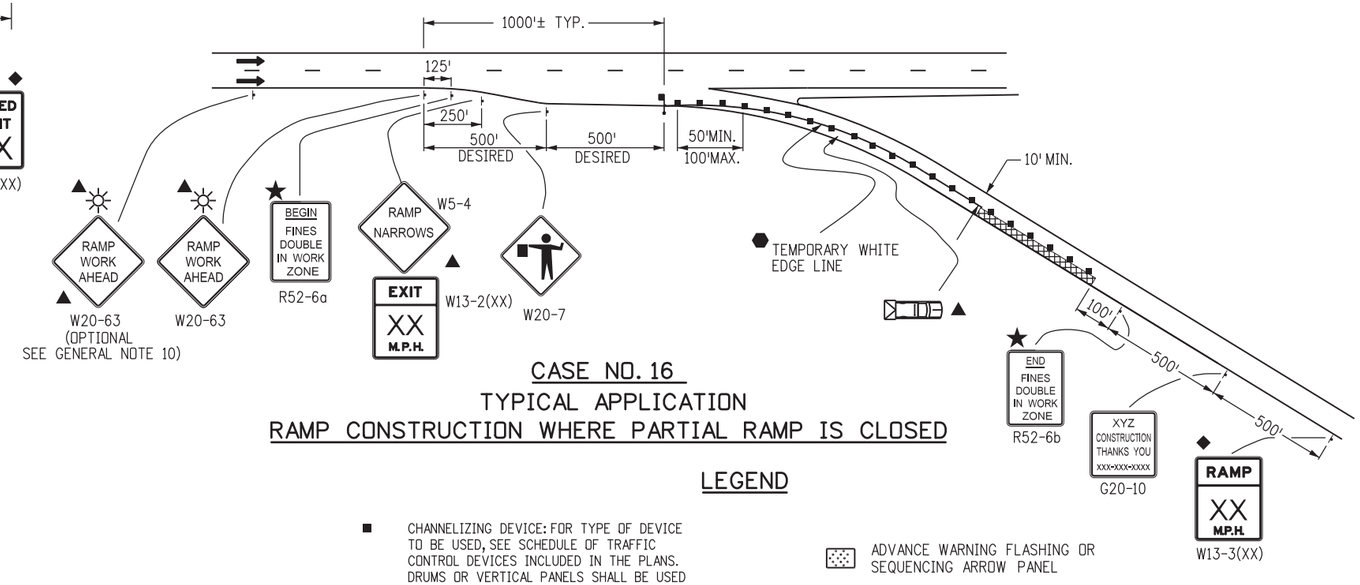

CASE NO. 16
TYPICAL APPLICATION
RAMP CONSTRUCTION WHERE PARTIAL RAMP IS CLOSED

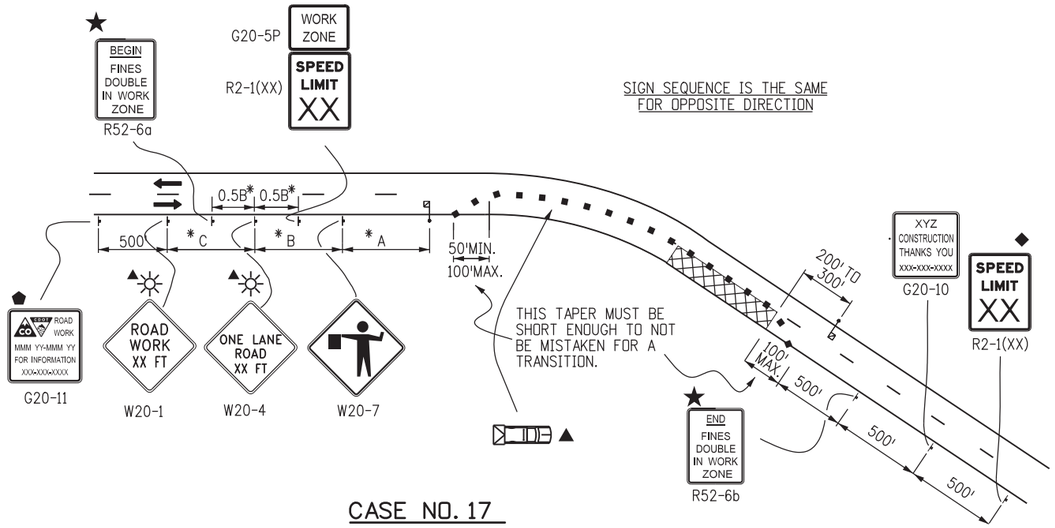

SIGN SEQUENCE IS THE SAME FOR OPPOSITE DIRECTION

CASE NO. 17
TYPICAL APPLICATION
LANE CLOSURE, 2-LANE HIGHWAY, AT CURVE

LEGEND

- ■ CHANNELIZING DEVICE: FOR TYPE OF DEVICE TO BE USED, SEE SCHEDULE OF TRAFFIC CONTROL DEVICES INCLUDED IN THE PLANS. DRUMS OR VERTICAL PANELS SHALL BE USED TO DELINEATE THE LANE CLOSURE TAPER.
- TYPE III BARRICADE
- CONCRETE BARRIER (TEMPORARY)
- FLAGGER
- DIRECTION OF TRAVEL
- WORK AREA
- L TRANSITION TAPER LENGTH:
  - L = MINIMUM LENGTH OF TAPER
  - SPEED 45 MPH OR MORE: $L = S \times W$
  - SPEED 40 MPH OR LESS: $L = \frac{WS^2}{60}$
  - S = NUMERICAL VALUE OF SPEED LIMIT OR 85 PERCENTILE SPEED
  - W = WIDTH OF OFFSET
  - SHOULDER TAPER = 1/3 L
- TRUCK MOUNTED ATTENUATOR (TMA)
- ★ SEE FINES DOUBLE SIGNING NOTES ON SHEET 12
- ADVANCE WARNING FLASHING OR SEQUENCING ARROW PANEL
- CZ CLEAR ZONE (SEE GENERAL NOTE 16 ON SHEET 1).
- ▲ THESE DEVICES ARE OPTIONAL. THEIR NEED SHALL BE DETERMINED BY DETOUR DESIGN AND/OR SCOPE OF CONSTRUCTION ACTIVITY, AND ARE REQUIRED WHEN THEY ARE INCLUDED IN THE SCHEDULE OF CONSTRUCTION CONTROL DEVICES.
- ◆ THESE DEVICES ARE NOT OPTIONAL IF THE POSTED SPEED LIMIT IN THE WORK ZONE IS REDUCED.
- FLASHING BEACON
- ⬢ REQUIRED WHEN WORK OCCUPIES THE LOCATION FOR MORE THAN 3 DAYS.
- ⬟ G20-11 SIGN IS REQUIRED WHEN SECTION 626 "PUBLIC INFORMATION SERVICES" PROJECT SPECIAL PROVISION WORKSHEET SPECIFICATION IS REQUIRED WITH PROJECT.

*KEY TO ADVANCE SIGNING DISTANCES

ROAD TYPE	DISTANCE BETWEEN SIGNS		
	A	B	C
URBAN (<=40 MPH)	100	100	100
URBAN (>=45 MPH)	350	350	350
RURAL	500	500	500
EXPRESSWAY/FREEWAY	1000	1500	2640

Computer File Information		
Creation Date: 07/04/12	Initials: RRR	
Last Modification Date: 07/26/13	Initials: KEN	R-4
Full Path: www.coloradodot.info/library/traffic/traffic-s-standard-plans		R-X
Drawing File Name: S-630-01_9of24.dgn		R-X
CAD Ver.: MicroStation V8 Scale: Not to Scale Units: English		R-X

Sheet Revisions	
Date:	Comments
07/26/13	CORRECTED SIGN CODE DESIGNATION FOR FLAGGER (SYMBOL) SIGN TO W20-7

Colorado Department of Transportation
4201 East Arkansas Avenue
Denver, Colorado 80222
Phone: (303) 757-9543
Fax: (303) 757-9219
Safety & Traffic Engineering Branch KCM/KEN

TRAFFIC CONTROLS FOR HIGHWAY CONSTRUCTION

Issued By: Safety & Traffic Engineering Branch July 4, 2012

STANDARD PLAN NO.
S-630-1
Sheet No. 9 of 24 94

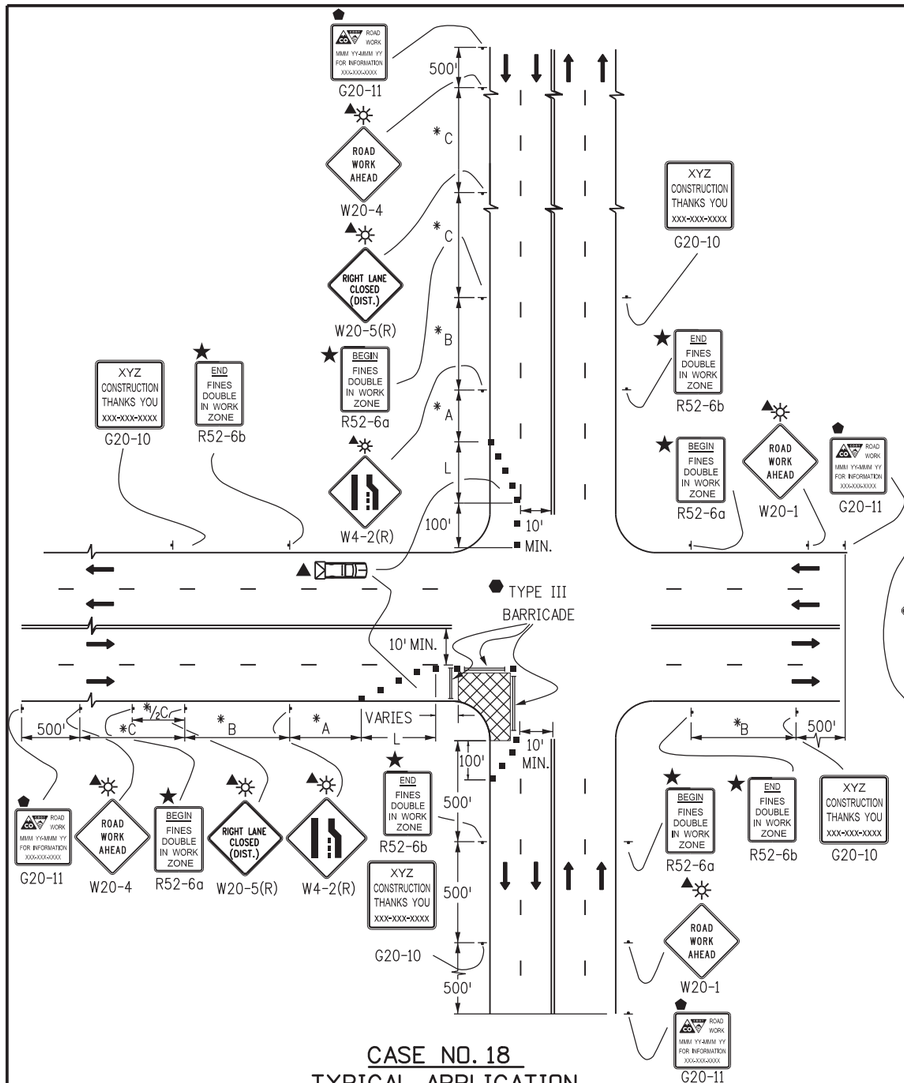

CASE NO. 18
TYPICAL APPLICATION TRAFFIC CONTROL AROUND A WORK AREA NEAR AN INTERSECTION, ONE LANE CLOSED

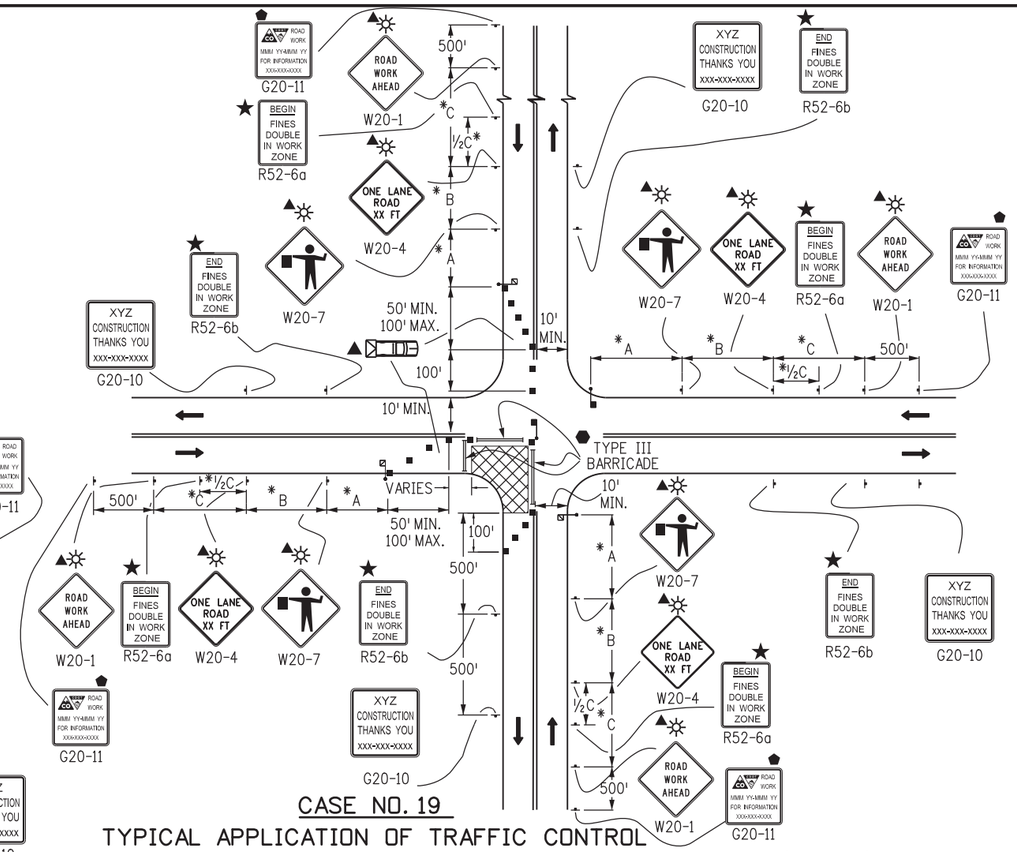

CASE NO. 19
TYPICAL APPLICATION OF TRAFFIC CONTROL AROUND A WORK AREA NEAR AN INTERSECTION

NOTES:

1. SIGN PLACEMENT SHOWN ON CASES 18 AND 19 TYPIFIES RURAL APPLICATIONS. URBAN APPLICATIONS REQUIRE THE SIGNS TO BE PLACED WITHIN ONE, OR PERHAPS TWO, BLOCKS.
2. TRUCK-MOUNTED ATTENUATORS (TMA) OPTIONAL FOR ALL CASES AS DETERMINED BY THE ENGINEER.

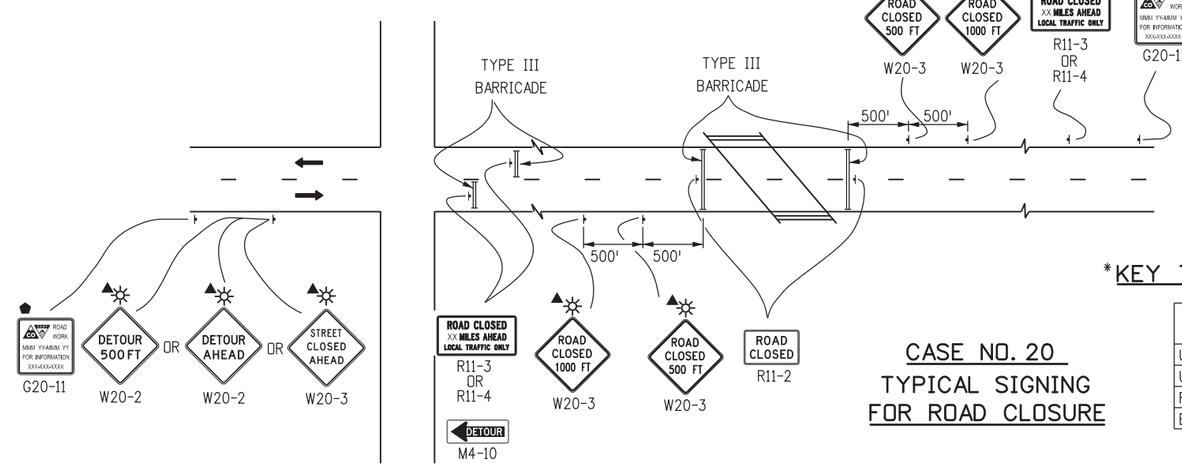

CASE NO. 20
TYPICAL SIGNING FOR ROAD CLOSURE

LEGEND

- CHANNELIZING DEVICE: FOR TYPE OF DEVICE TO BE USED, SEE SCHEDULE OF TRAFFIC CONTROL DEVICES INCLUDED IN THE PLANS. DRUMS OR VERTICAL PANELS SHALL BE USED TO DELINEATE THE LANE CLOSURE TAPER.
- TYPE III BARRICADE
- CONCRETE BARRIER (TEMPORARY)
- FLAGGER
- DIRECTION OF TRAVEL
- WORK AREA
- L — TRANSITION TAPER LENGTH:
  - L = MINIMUM LENGTH OF TAPER
  - SPEED 45 MPH OR MORE: $L = S \times W$
  - SPEED 40 MPH OR LESS: $L = \frac{WS^2}{60}$
  - S = NUMERICAL VALUE OF SPEED LIMIT OR 85 PERCENTILE SPEED
  - W = WIDTH OF OFFSET
  - SHOULDER TAPER = 1/3 L
- TRUCK MOUNTED ATTENUATOR (TMA)
- CZ — CLEAR ZONE (SEE GENERAL NOTE 16).
- FLASHING BEACON
- ▲ THESE DEVICES ARE OPTIONAL. THEIR NEED SHALL BE DETERMINED BY DETOUR DESIGN AND/OR SCOPE OF CONSTRUCTION ACTIVITY, AND ARE REQUIRED WHEN THEY ARE INCLUDED IN THE SCHEDULE OF CONSTRUCTION CONTROL DEVICES.
- VARIES — BUFFER SPACE (SEE GENERAL NOTE 21 ON SHEET 1).
- ⬢ REQUIRED WHEN WORK OCCUPIES THE LOCATION FOR MORE THAN 3 DAYS.
- ★ SEE FINES DOUBLE SIGNING NOTES ON SHEET 12.
- ⬟ G20-11 SIGN IS REQUIRED WHEN SECTION 626 "PUBLIC INFORMATION SERVICES" PROJECT SPECIAL PROVISION WORKSHEET SPECIFICATION IS REQUIRED WITH PROJECT.

*KEY TO ADVANCE SIGNING DISTANCES

ROAD TYPE	DISTANCE BETWEEN SIGNS		
	A	B	C
URBAN (<= 40 MPH)	100	100	100
URBAN (>= 45 MPH)	350	350	350
RURAL	500	500	500
EXPRESSWAY/FREEWAY	1000	1500	2640

Computer File Information	
Creation Date: 07/04/12	Initials: RRR
Last Modification Date: 07/26/13	Initials: KEN
Full Path: www.coloradodot.info/library/traffic/traffic-s-standard-plans	
Drawing File Name: S-630-01_10of24.dgn	
CAD Ver.: MicroStation V8 Scale: Not to Scale Units: English	

	Sheet Revisions	
	Date:	Comments
R-4	07/26/13	CORRECTED SIGN CODE DESIGNATION FOR FLAGGER (SYMBOL) SIGN TO W20-7
R-X		
R-X		
R-X		

Colorado Department of Transportation
4201 East Arkansas Avenue
Denver, Colorado 80222
Phone: (303) 757-9543
Fax: (303) 757-9219
Safety & Traffic Engineering Branch KCM/KEN

TRAFFIC CONTROLS FOR HIGHWAY CONSTRUCTION

Issued By: Safety & Traffic Engineering Branch July 4, 2012

STANDARD PLAN NO.
S-630-1
Sheet No. 10 of 24

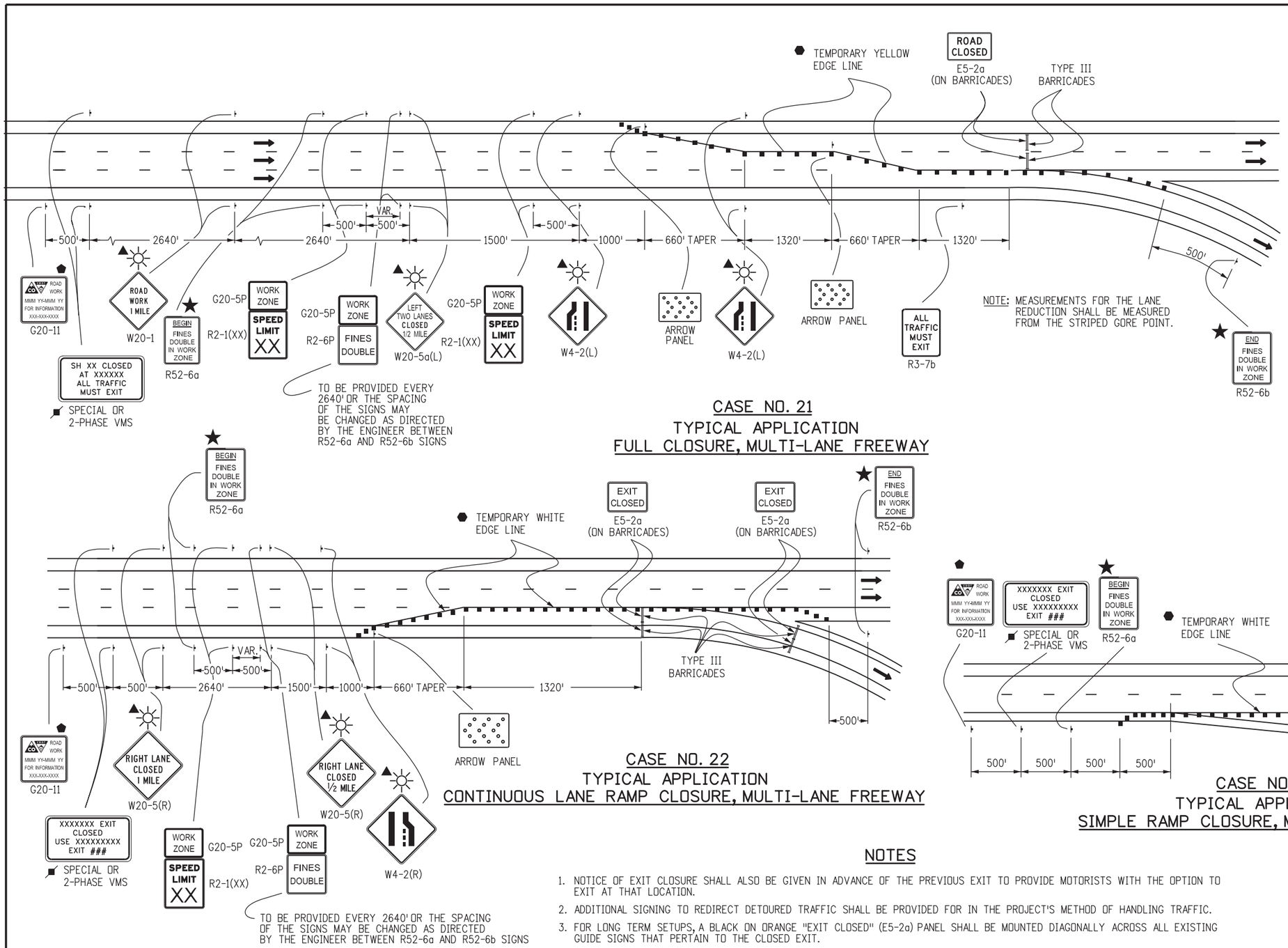

NOTE: MEASUREMENTS FOR THE LANE REDUCTION SHALL BE MEASURED FROM THE STRIPED GORE POINT.

CASE NO. 21
TYPICAL APPLICATION
FULL CLOSURE, MULTI-LANE FREEWAY

CASE NO. 22
TYPICAL APPLICATION
CONTINUOUS LANE RAMP CLOSURE, MULTI-LANE FREEWAY

LEGEND

- ADVANCE WARNING FLASHING OR SEQUENCING ARROW PANEL
- ▲ THESE DEVICES ARE OPTIONAL. THEIR NEED WILL BE DETERMINED BY THE DESIGNER BASED ON DETOUR DESIGN AND/OR SCOPE OF THE CONSTRUCTION ACTIVITY, AND ARE REQUIRED WHEN THEY ARE INCLUDED IN THE PLANS.
- ⬢ REQUIRED WHEN WORK OCCUPIES THE LOCATION FOR MORE THAN 3 DAYS.
- ⬟ G20-11 SIGN IS REQUIRED WHEN SECTION 626 "PUBLIC INFORMATION SERVICES" PROJECT SPECIAL PROVISION WORKSHEET SPECIFICATION IS REQUIRED WITH PROJECT.
- ■ CHANNELIZING DEVICE: FOR TYPE OF DEVICE TO BE USED, SEE SCHEDULE OF TRAFFIC CONTROL DEVICES INCLUDED IN THE PLANS. DRUMS OR VERTICAL PANELS SHALL BE USED TO DELINEATE THE LANE CLOSURE TAPER.
- TYPE III BARRICADE
- DIRECTION OF TRAVEL
- L TRANSITION TAPER LENGTH:
  - L = MINIMUM LENGTH OF TAPER
  - SPEED 45 MPH OR MORE: $L = S \times W$
  - SPEED 40 MPH OR LESS: $L = \frac{WS^2}{60}$
  - S = NUMERICAL VALUE OF SPEED LIMIT OR 85 PERCENTILE SPEED
  - W = WIDTH OF OFFSET
  - SHOULDER TAPER = 1/3 L
- CLOSURE AND EXIT MESSAGES ON SIGN LEGEND(S) SHOULD BE MODIFIED TO FIT THE SITUATION.
- FLASHING BEACON
- ★ SEE FINES DOUBLE SIGNING NOTES ON SHEET 12.

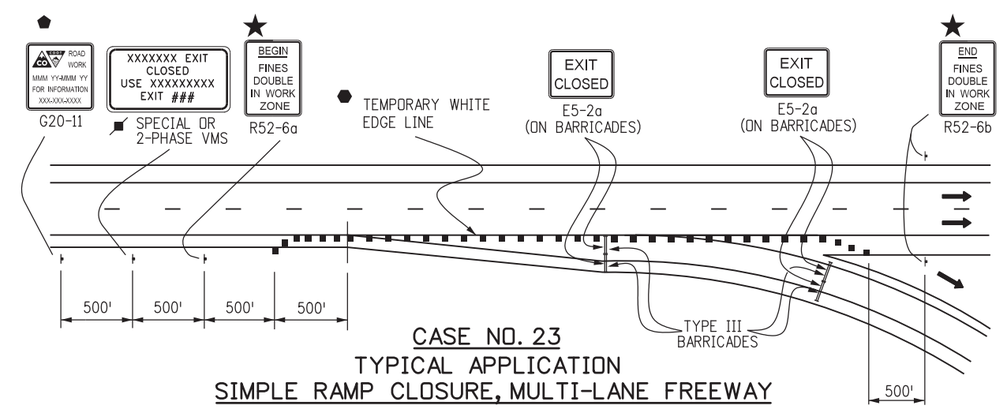

CASE NO. 23
TYPICAL APPLICATION
SIMPLE RAMP CLOSURE, MULTI-LANE FREEWAY

NOTES

1. NOTICE OF EXIT CLOSURE SHALL ALSO BE GIVEN IN ADVANCE OF THE PREVIOUS EXIT TO PROVIDE MOTORISTS WITH THE OPTION TO EXIT AT THAT LOCATION.
2. ADDITIONAL SIGNING TO REDIRECT DETOURED TRAFFIC SHALL BE PROVIDED FOR IN THE PROJECT'S METHOD OF HANDLING TRAFFIC.
3. FOR LONG TERM SETUPS, A BLACK ON ORANGE "EXIT CLOSED" (E5-2a) PANEL SHALL BE MOUNTED DIAGONALLY ACROSS ALL EXISTING GUIDE SIGNS THAT PERTAIN TO THE CLOSED EXIT.

Computer File Information		Sheet Revisions	
Creation Date: 07/04/12	Initials: KEN	Date:	Comments
Last Modification Date:	Initials:	R-X	
Full Path: www.coloradodot.info/library/traffic/traffic-s-standard-plans		R-X	
Drawing File Name: S-630-01_11of24.dgn		R-X	
CAD Ver.: MicroStation V8 Scale: Not to Scale Units: English		R-X	

Colorado Department of Transportation
4201 East Arkansas Avenue
Denver, Colorado 80222
Phone: (303) 757-9543
Fax: (303) 757-9219
Safety & Traffic Engineering Branch KCM/KEN

TRAFFIC CONTROLS FOR HIGHWAY CONSTRUCTION

Issued By: Safety & Traffic Engineering Branch July 4, 2012

STANDARD PLAN NO.
S-630-1
Sheet No. 11 of 24

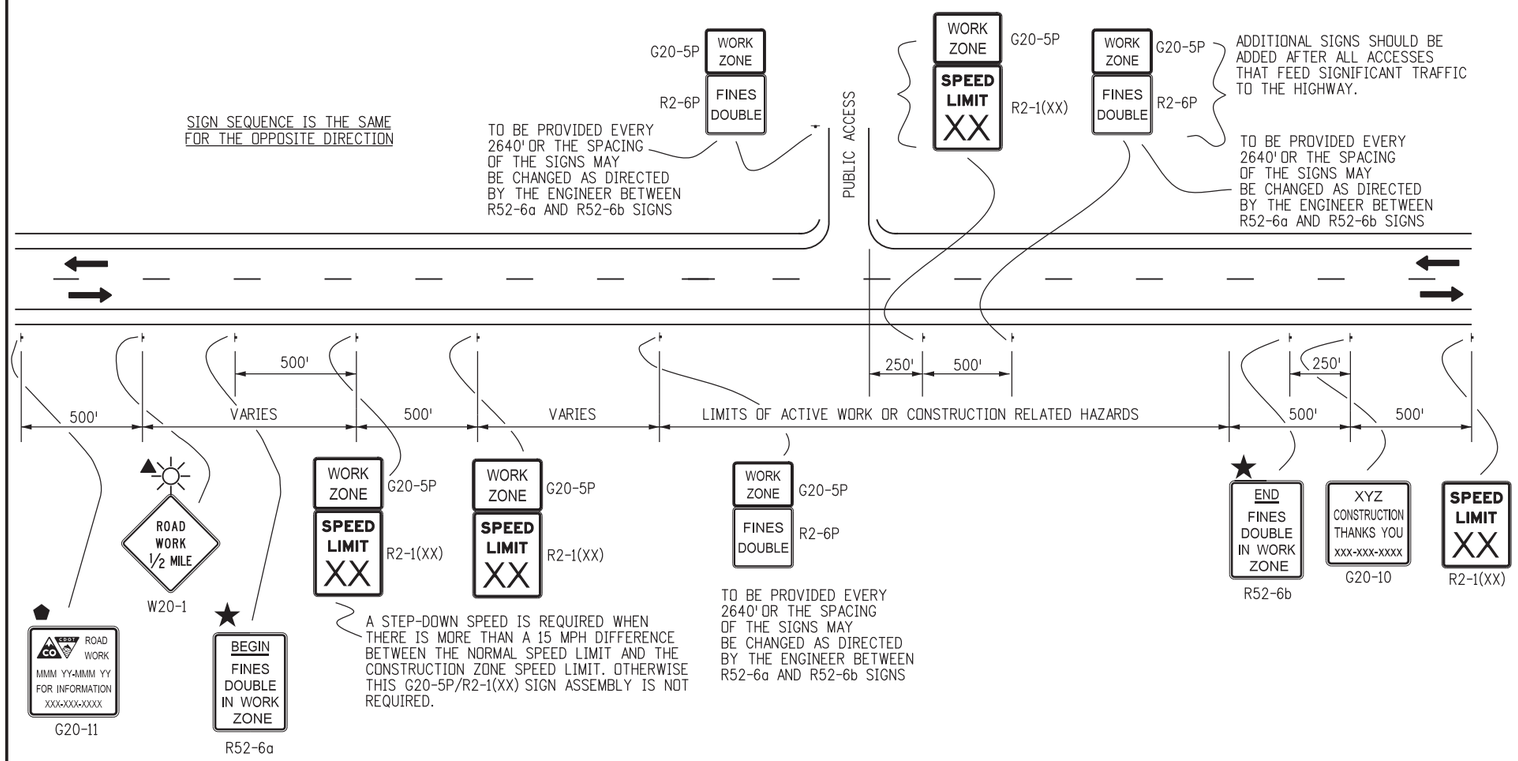

CASE NO. 24
TYPICAL APPLICATION
"FINES DOUBLE IN WORK ZONE" SIGNING
(WITH SPEED REDUCTION)

LEGEND

- DIRECTION OF TRAVEL
- THESE DEVICES ARE OPTIONAL. THEIR NEED WILL BE DETERMINED BY THE DESIGNER BASED ON DETOUR DESIGN AND/OR SCOPE OF THE CONSTRUCTION ACTIVITY, AND ARE REQUIRED WHEN THEY ARE INCLUDED IN THE PLANS.
- G20-11 SIGN IS REQUIRED WHEN SECTION 626 "PUBLIC INFORMATION SERVICES" PROJECT SPECIAL PROVISION WORKSHEET SPECIFICATION IS REQUIRED WITH PROJECT.
- FLASHING BEACON
- FINES DOUBLE SIGNING NOTES, SEE BELOW

FINES DOUBLE SIGNING NOTES:

1. SIGNS SHALL NOT BE PLACED SOONER THAN FOUR HOURS BEFORE WORK IS TO BEGIN AND SHALL BE REMOVED AS SOON AS WORK ACTIVITIES ARE CONCLUDED, UNLESS POTENTIAL HAZARDS INTRODUCED AS A RESULT OF THE WORK ARE STILL PRESENT AT THE END OF THE WORK DAY. IF SIGNS ARE LEFT IN PLACE AFTER WORK ACTIVITIES, THE TRAFFIC CONTROL SUPERVISOR SHALL MAKE AN ENTRY IN THEIR DAILY DIARY THAT JUSTIFIES THEIR USE.

   "HAZARDS" INCLUDE BUT ARE NOT LIMITED TO:
   - EDGE DROP OFFS
   - EQUIPMENT, WORKERS OR NON-SHIELDED OBJECTS IN THE CLEAR ZONE
   - ROUGH PAVEMENT
   - MAJOR CHANGE IN ALIGNMENT
   - REDUCED SHOULDER WIDTH
   - TEMPORARY GUARD RAIL OR BARRIER
   - LANE CLOSURE

2. SIGNS SHALL ONLY BE PLACED WHERE WORKERS ARE PRESENT IN THE ROADWAY OR CLEAR ZONE OR ARE AT RISK, OR WHERE THERE ARE HAZARDS IN THE TRAVELWAY, SHOULDERS OR CLEAR ZONE.

3. SIGNS SHOULD BE PLACED SO THAT MOTORISTS IMMEDIATELY ASSOCIATE THE SIGNS WITH PRESENT WORK ACTIVITIES. IF THE ZONE OF WORK ACTIVITY MOVES, THE SIGNS SHOULD BE MOVED ACCORDINGLY.

4. SIGNING SHOWN IS REQUIRED TO ENFORCE DOUBLE FINES IN A WORK ZONE. ADDITIONAL SIGNING SHALL BE IN ACCORDANCE WITH THAT NORMALLY REQUIRED FOR THE PARTICULAR WORK ZONE. PLACEMENT OF "FINES DOUBLE" SIGNING MAY BE ADJUSTED AS NEEDED TO PROVIDE A MINIMUM 250' SPACING BETWEEN OTHER SIGNING REQUIRED FOR THE SPECIFIC WORK ZONE SETUP.

Computer File Information			Sheet Revisions	
Creation Date: 07/04/12	Initials: RRR		Date:	Comments
Last Modification Date:	Initials:	R-X		
Full Path: www.coloradodot.info/library/traffic/traffic-s-standard-plans		R-X		
Drawing File Name: S-630-01_12of24.dgn		R-X		
CAD Ver.: MicroStation V8 Scale: Not to Scale	Units: English	R-X		

Colorado Department of Transportation
4201 East Arkansas Avenue
Denver, Colorado 80222
Phone: (303) 757-9543
Fax: (303) 757-9219
Safety & Traffic Engineering Branch KCM/KEN

TRAFFIC CONTROLS FOR HIGHWAY CONSTRUCTION

Issued By: Safety & Traffic Engineering Branch July 4, 2012

STANDARD PLAN NO.
S-630-1
Sheet No. 12 of 24

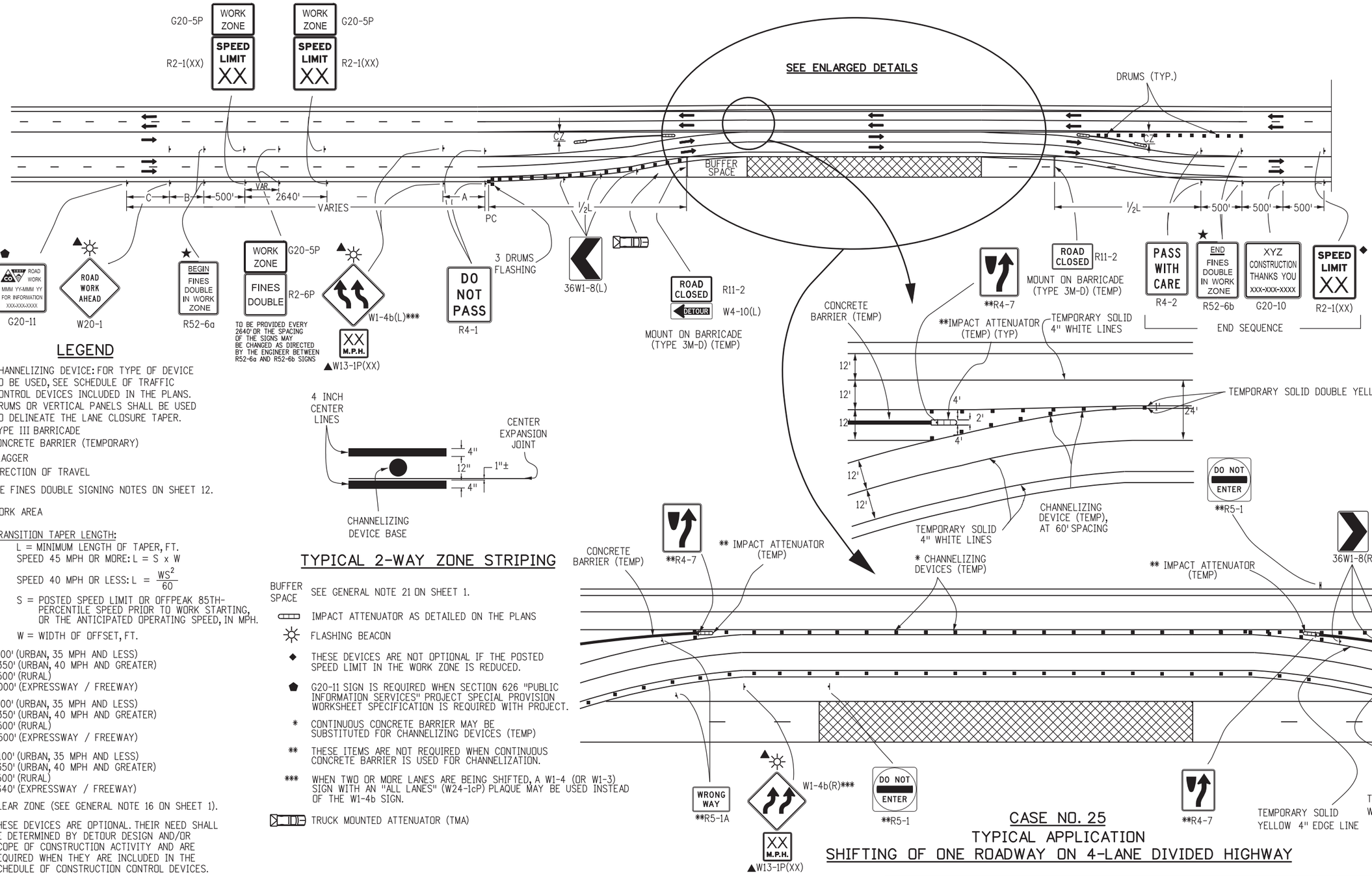

LEGEND

- ▪ CHANNELIZING DEVICE: FOR TYPE OF DEVICE TO BE USED, SEE SCHEDULE OF TRAFFIC CONTROL DEVICES INCLUDED IN THE PLANS. DRUMS OR VERTICAL PANELS SHALL BE USED TO DELINEATE THE LANE CLOSURE TAPER.
- TYPE III BARRICADE
- CONCRETE BARRIER (TEMPORARY)
- FLAGGER
- DIRECTION OF TRAVEL
- ★ SEE FINES DOUBLE SIGNING NOTES ON SHEET 12.
- WORK AREA
- L TRANSITION TAPER LENGTH:
  - L = MINIMUM LENGTH OF TAPER, FT.
  - SPEED 45 MPH OR MORE: L = S x W
  - SPEED 40 MPH OR LESS: $L = \frac{WS^2}{60}$
  - S = POSTED SPEED LIMIT OR OFFPEAK 85TH-PERCENTILE SPEED PRIOR TO WORK STARTING, OR THE ANTICIPATED OPERATING SPEED, IN MPH.
  - W = WIDTH OF OFFSET, FT.
- A = 100' (URBAN, 35 MPH AND LESS)
  350' (URBAN, 40 MPH AND GREATER)
  500' (RURAL)
  1,000' (EXPRESSWAY / FREEWAY)
- B = 100' (URBAN, 35 MPH AND LESS)
  350' (URBAN, 40 MPH AND GREATER)
  500' (RURAL)
  1,500' (EXPRESSWAY / FREEWAY)
- C = 100' (URBAN, 35 MPH AND LESS)
  350' (URBAN, 40 MPH AND GREATER)
  500' (RURAL)
  2,640' (EXPRESSWAY / FREEWAY)
- CZ CLEAR ZONE (SEE GENERAL NOTE 16 ON SHEET 1).
- ▲ THESE DEVICES ARE OPTIONAL. THEIR NEED SHALL BE DETERMINED BY DETOUR DESIGN AND/OR SCOPE OF CONSTRUCTION ACTIVITY AND ARE REQUIRED WHEN THEY ARE INCLUDED IN THE SCHEDULE OF CONSTRUCTION CONTROL DEVICES.

TYPICAL 2-WAY ZONE STRIPING

- BUFFER SPACE — SEE GENERAL NOTE 21 ON SHEET 1.
- IMPACT ATTENUATOR AS DETAILED ON THE PLANS
- FLASHING BEACON
- ◆ THESE DEVICES ARE NOT OPTIONAL IF THE POSTED SPEED LIMIT IN THE WORK ZONE IS REDUCED.
- ⬟ G20-11 SIGN IS REQUIRED WHEN SECTION 626 "PUBLIC INFORMATION SERVICES" PROJECT SPECIAL PROVISION WORKSHEET SPECIFICATION IS REQUIRED WITH PROJECT.
- * CONTINUOUS CONCRETE BARRIER MAY BE SUBSTITUTED FOR CHANNELIZING DEVICES (TEMP)
- ** THESE ITEMS ARE NOT REQUIRED WHEN CONTINUOUS CONCRETE BARRIER IS USED FOR CHANNELIZATION.
- *** WHEN TWO OR MORE LANES ARE BEING SHIFTED, A W1-4 (OR W1-3) SIGN WITH AN "ALL LANES" (W24-1cP) PLAQUE MAY BE USED INSTEAD OF THE W1-4b SIGN.
- TRUCK MOUNTED ATTENUATOR (TMA)

CASE NO. 25
TYPICAL APPLICATION
SHIFTING OF ONE ROADWAY ON 4-LANE DIVIDED HIGHWAY

Computer File Information			Sheet Revisions	
Creation Date: 07/04/12 Initials: RRR			Date:	Comments
Last Modification Date: 02/06/13 Initials: KEN	R-1		02/06/13	UPDATE TO 2009 MUTCD STANDARD
Full Path: www.coloradodot.info/library/traffic/traffic-s-standard-plans	R-X			
Drawing File Name: S-630-01_13of24.dgn	R-X			
CAD Ver.: MicroStation V8 Scale: Not to Scale Units: English	R-X			

Colorado Department of Transportation
4201 East Arkansas Avenue
Denver, Colorado 80222
Phone: (303) 757-9543
Fax: (303) 757-9219
Safety & Traffic Engineering Branch KCM/KEN

TRAFFIC CONTROLS FOR HIGHWAY CONSTRUCTION

Issued By: Safety & Traffic Engineering Branch July 4, 2012

STANDARD PLAN NO.
S-630-1
Sheet No. 13 of 24

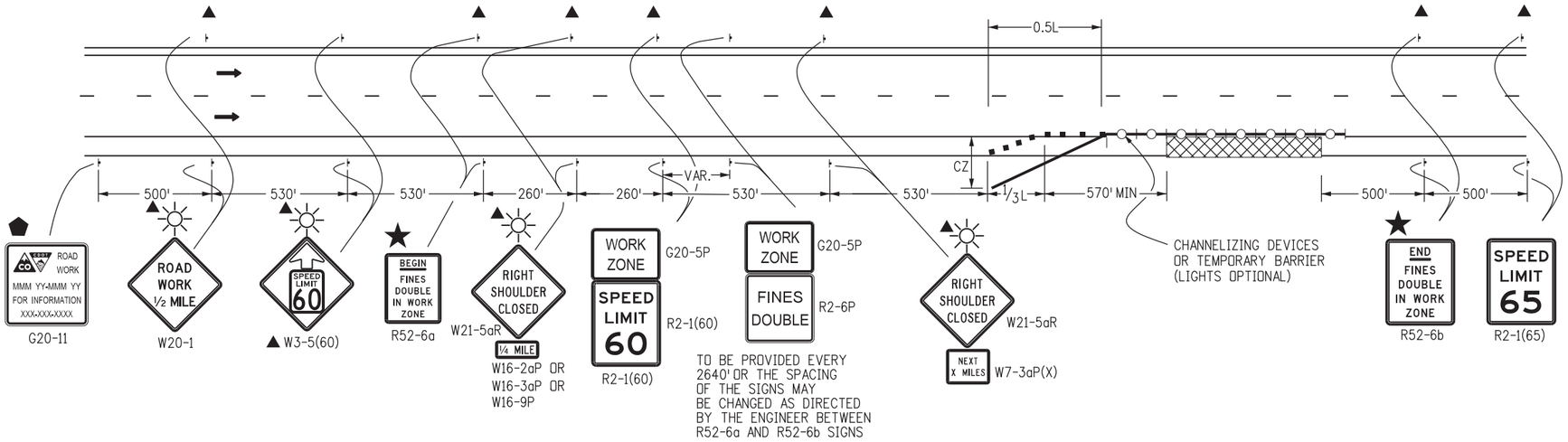

CASE NO. 26
TYPICAL APPLICATION
SHOULDER WORK - FREEWAY/EXPRESSWAY w/ 65 MPH SPEED LIMIT

WHEN HAZARDS (WORKERS, EQUIPMENT, OR TEMPORARY BARRIER) ARE WITHIN 8 FT OF TRAVEL WAY

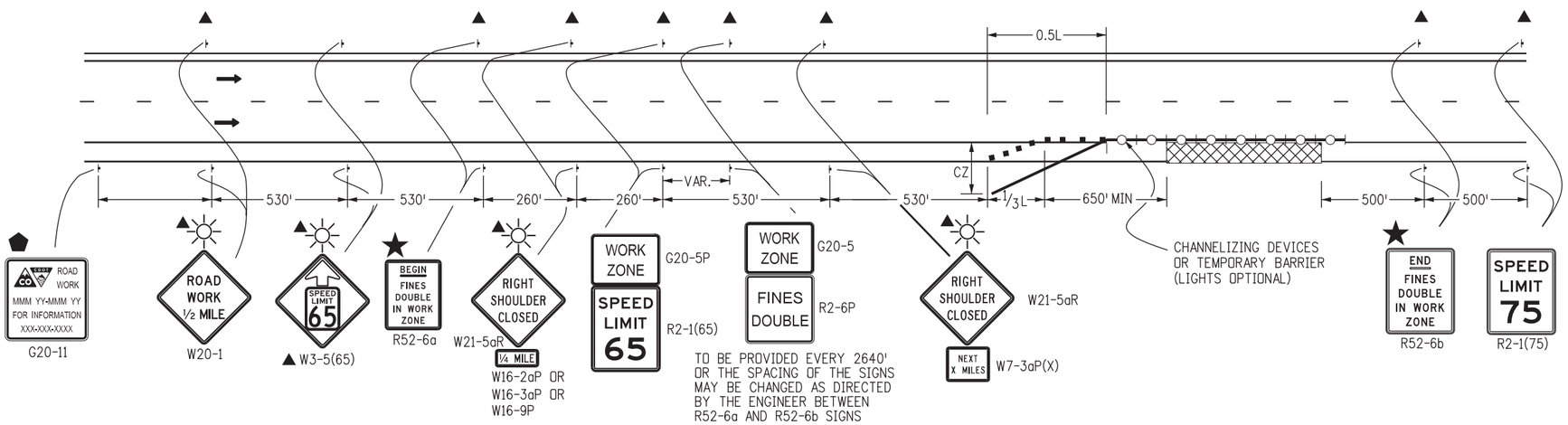

CASE NO. 27
TYPICAL APPLICATION
SHOULDER WORK - FREEWAY/EXPRESSWAY w/ 75 MPH SPEED LIMIT

WHEN HAZARDS (WORKERS, EQUIPMENT, OR TEMPORARY BARRIER) ARE WITHIN 10 FT OF TRAVEL WAY

LEGEND

- CHANNELIZING DEVICE: FOR TYPE OF DEVICE TO BE USED, SEE SCHEDULE OF TRAFFIC CONTROL DEVICES INCLUDED IN THE PLANS. DRUMS OR VERTICAL PANELS SHALL BE USED TO DELINEATE THE LANE CLOSURE TAPER.
- TYPE III BARRICADE
- CONCRETE BARRIER (TEMPORARY)
- FLAGGER
- DIRECTION OF TRAVEL
- WORK AREA
- L — TRANSITION TAPER LENGTH:
  - L = MINIMUM LENGTH OF TAPER
  - SPEED 45 MPH OR MORE: L = S x W
  - S = NUMERICAL VALUE OF SPEED LIMIT OR 85 PERCENTILE SPEED
  - W = WIDTH OF OFFSET
  - SHOULDER TAPER = 1/3 L
- ADVANCE WARNING FLASHING OR SEQUENCING ARROW PANEL
- CZ — CLEAR ZONE (SEE GENERAL NOTE 16 ON SHEET 1).
- ▲ THESE DEVICES ARE OPTIONAL. THEIR NEED SHALL BE DETERMINED BY TRAFFIC VOLUMES AND/OR SCOPE OF CONSTRUCTION ACTIVITY, AND ARE REQUIRED WHEN THEY ARE INCLUDED IN THE SCHEDULE OF CONSTRUCTION CONTROL DEVICES.
- ⬟ G20-11 SIGN IS REQUIRED WHEN SECTION 626 "PUBLIC INFORMATION SERVICES" PROJECT SPECIAL PROVISION WORKSHEET SPECIFICATION IS REQUIRED WITH PROJECT.
- ⬢ REQUIRED WHEN WORK OCCUPIES THE LOCATION FOR MORE THAN 3 DAYS.
- TRUCK MOUNTED ATTENUATOR
- FLASHING BEACON
- ★ SEE FINES DOUBLE SIGNING NOTES ON SHEET 12.

Computer File Information		Sheet Revisions	
Creation Date: 07/04/12 Initials: RRR		Date:	Comments
Last Modification Date: Initials:	R-X		
Full Path: www.coloradodot.info/library/traffic/traffic-s-standard-plans	R-X		
Drawing File Name: S-630-01_14of24.dgn	R-X		
CAD Ver.: MicroStation V8 Scale: Not to Scale Units: English	R-X		

Colorado Department of Transportation
4201 East Arkansas Avenue
Denver, Colorado 80222
Phone: (303) 757-9543
Fax: (303) 757-9219
Safety & Traffic Engineering Branch KCM/KEN

TRAFFIC CONTROLS FOR HIGHWAY CONSTRUCTION

Issued By: Safety & Traffic Engineering Branch July 4, 2012

STANDARD PLAN NO.

S-630-1

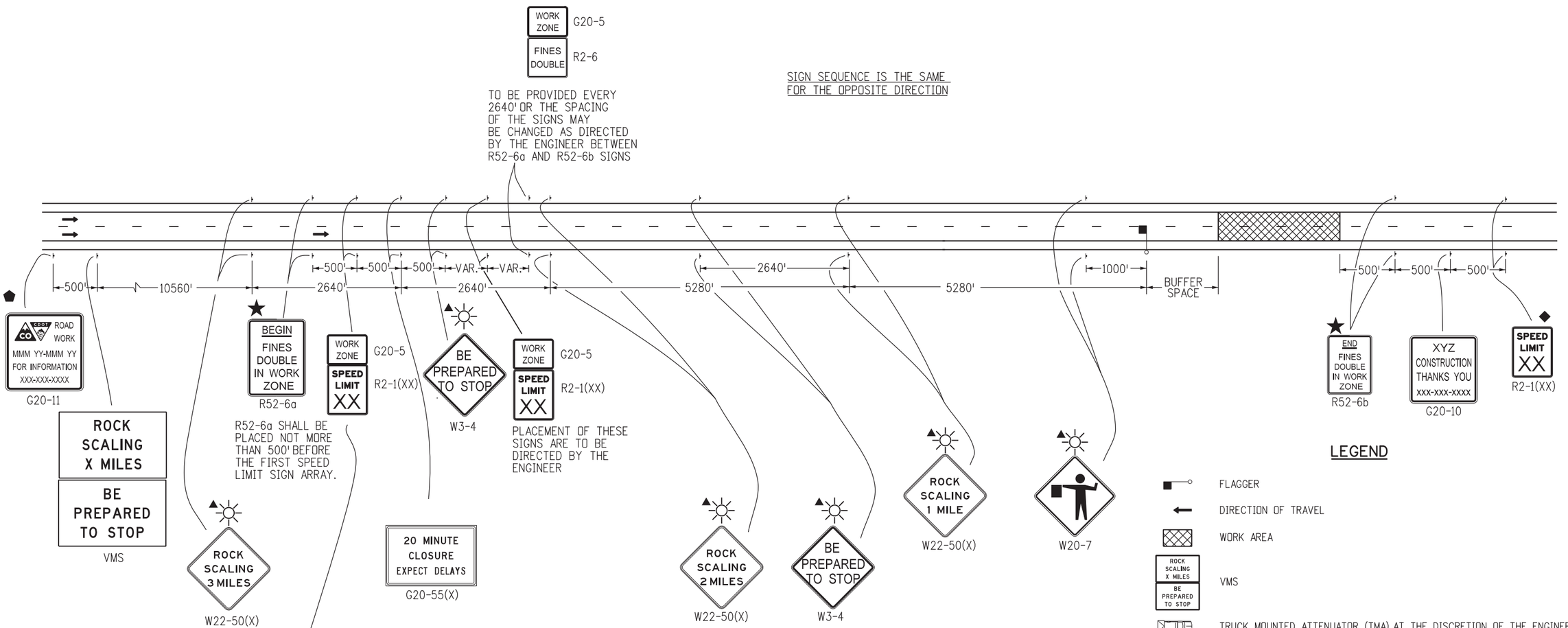

LEGEND

- FLAGGER
- DIRECTION OF TRAVEL
- WORK AREA
- VMS (ROCK SCALING X MILES / BE PREPARED TO STOP)
- TRUCK MOUNTED ATTENUATOR (TMA) AT THE DISCRETION OF THE ENGINEER
- ▲ THESE DEVICES ARE OPTIONAL. THEIR NEED SHALL BE DETERMINED BY DETOUR DESIGN AND/OR SCOPE OF CONSTRUCTION ACTIVITY, AND ARE REQUIRED WHEN THEY ARE INCLUDED IN THE SCHEDULE OF CONSTRUCTION CONTROL DEVICES.
- ◆ THESE DEVICES ARE NOT OPTIONAL IF THE POSTED SPEED LIMIT IN THE WORK ZONE IS REDUCED.
- ⬟ G20-11 SIGN IS REQUIRED WHEN SECTION 626 "PUBLIC INFORMATION SERVICES" PROJECT SPECIAL PROVISION WORKSHEET SPECIFICATION IS REQUIRED WITH PROJECT.
- BUFFER SPACE — SEE GENERAL NOTE 21 ON SHEET 1.
- FLASHING BEACON
- ★ SEE FINES DOUBLE SIGNING NOTES ON SHEET 12.

CASE NO. 28
TYPICAL APPLICATION
ROCK SCALING - ROAD CLOSURE, 4-LANE DIVIDED HIGHWAY

Computer File Information	
Creation Date: 07/04/12	Initials: RRR
Last Modification Date: 07/26/13	Initials: KEN
Full Path: www.coloradodot.info/library/traffic/traffic-s-standard-plans	
Drawing File Name: S-630-01_15of24.dgn	
CAD Ver.: MicroStation V8 Scale: Not to Scale Units: English	

	Sheet Revisions	
	Date:	Comments
R-4	07/26/13	CORRECTED SIGN CODE DESIGNATION FOR FLAGGER (SYMBOL) SIGN TO W20-7
R-X		
R-X		
R-X		

Colorado Department of Transportation
4201 East Arkansas Avenue
Denver, Colorado 80222
Phone: (303) 757-9543
Fax: (303) 757-9219
Safety & Traffic Engineering Branch KCM/KEN

TRAFFIC CONTROLS FOR HIGHWAY CONSTRUCTION

Issued By: Safety & Traffic Engineering Branch July 4, 2012

STANDARD PLAN NO.
S-630-1
Sheet No. 15 of 24

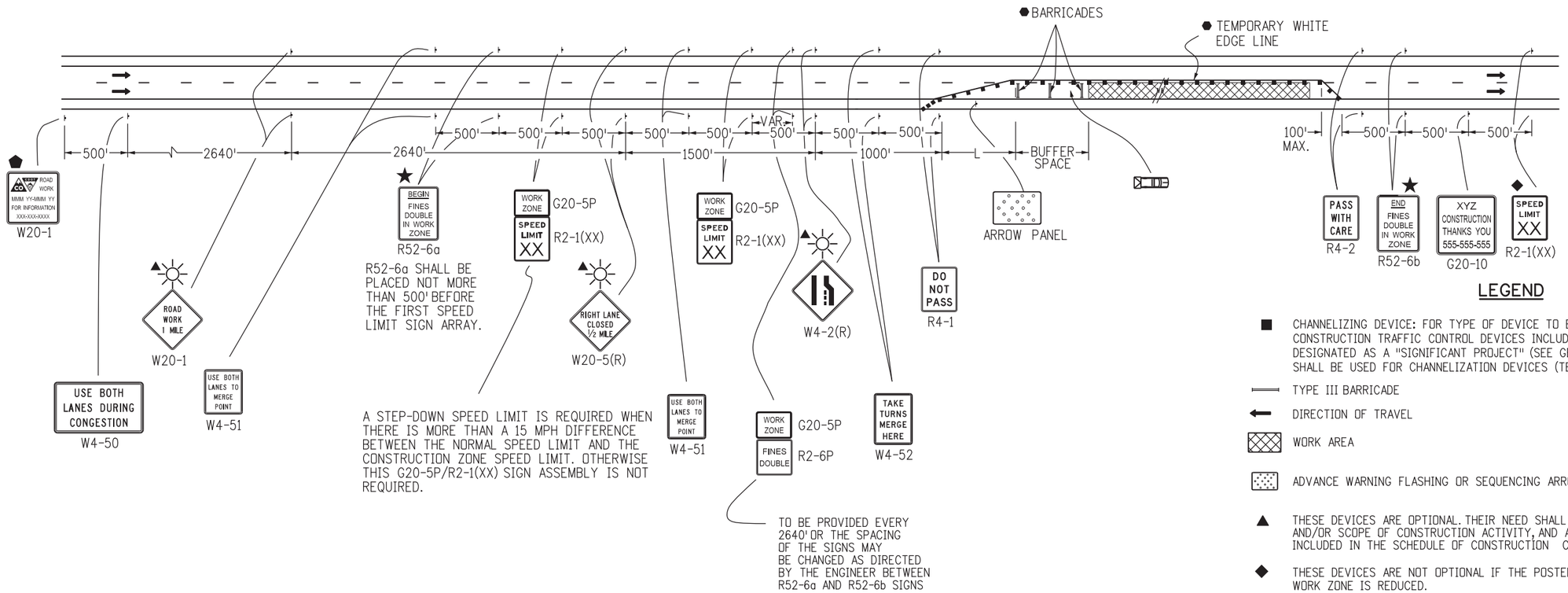

LEGEND

■ CHANNELIZING DEVICE: FOR TYPE OF DEVICE TO BE USED, SEE THE SCHEDULE OF CONSTRUCTION TRAFFIC CONTROL DEVICES INCLUDED IN THE PLANS. IF PROJECT IS DESIGNATED AS A "SIGNIFICANT PROJECT" (SEE GENERAL NOTE 25), CONCRETE BARRIER SHALL BE USED FOR CHANNELIZATION DEVICES (TEMP) AS DETERMINED BY THE ENGINEER.

TYPE III BARRICADE

DIRECTION OF TRAVEL

WORK AREA

ADVANCE WARNING FLASHING OR SEQUENCING ARROW PANEL.

▲ THESE DEVICES ARE OPTIONAL. THEIR NEED SHALL BE DETERMINED BY DETOUR DESIGN AND/OR SCOPE OF CONSTRUCTION ACTIVITY, AND ARE REQUIRED WHEN THEY ARE INCLUDED IN THE SCHEDULE OF CONSTRUCTION CONTROL DEVICES.

◆ THESE DEVICES ARE NOT OPTIONAL IF THE POSTED SPEED LIMIT IN THE WORK ZONE IS REDUCED.

⬟ G20-11 SIGN IS REQUIRED WHEN SECTION 626 "PUBLIC INFORMATION INFORMATION SERVICES" PROJECT SPECIAL PROVISION WORKSHEET SPECIFICATION IS REQUIRED WITH PROJECT.

FLASHING BEACON

⬢ REQUIRED WHEN WORK OCCUPIES THE LOCATION FOR MORE THAN 3 DAYS.

★ SEE FINES DOUBLE SIGNING NOTES ON SHEET 12.

TRUCK MOUNTED ATTENUATOR (TMA)

L TRANSITION TAPER LENGTH:

L = MINIMUM LENGTH OF TAPER

SPEED 45 MPH OR MORE: $L = S \times W$

SPEED 40 MPH OR LESS: $L = \frac{WS^2}{60}$

S = NUMERICAL VALUE OF SPEED LIMIT OR 85 PERCENTILE SPEED

W = WIDTH OF OFFSET

SHOULDER TAPER = 1/3 L

BUFFER SPACE SEE GENERAL NOTE 21 ON SHEET 1.

CASE NO. 29
TYPICAL APPLICATION
LATE MERGING - ONE LANE CLOSED, 4-LANE DIVIDED HIGHWAY

Computer File Information		Sheet Revisions	
Creation Date: 07/04/12 Initials: RRR		Date:	Comments
Last Modification Date: Initials:	R-X		
Full Path: www.coloradodot.info/library/traffic/traffic-s-standard-plans	R-X		
Drawing File Name: S-630-01_16of24.dgn	R-X		
CAD Ver.: MicroStation V8 Scale: Not to Scale Units: English	R-X		

Colorado Department of Transportation
4201 East Arkansas Avenue
Denver, Colorado 80222
Phone: (303) 757-9543
Fax: (303) 757-9219
Safety & Traffic Engineering Branch KCM/KEN

TRAFFIC CONTROLS FOR HIGHWAY CONSTRUCTION

Issued By: Safety & Traffic Engineering Branch July 4, 2012

STANDARD PLAN NO.
S-630-1
Sheet No. 16 of 24 01

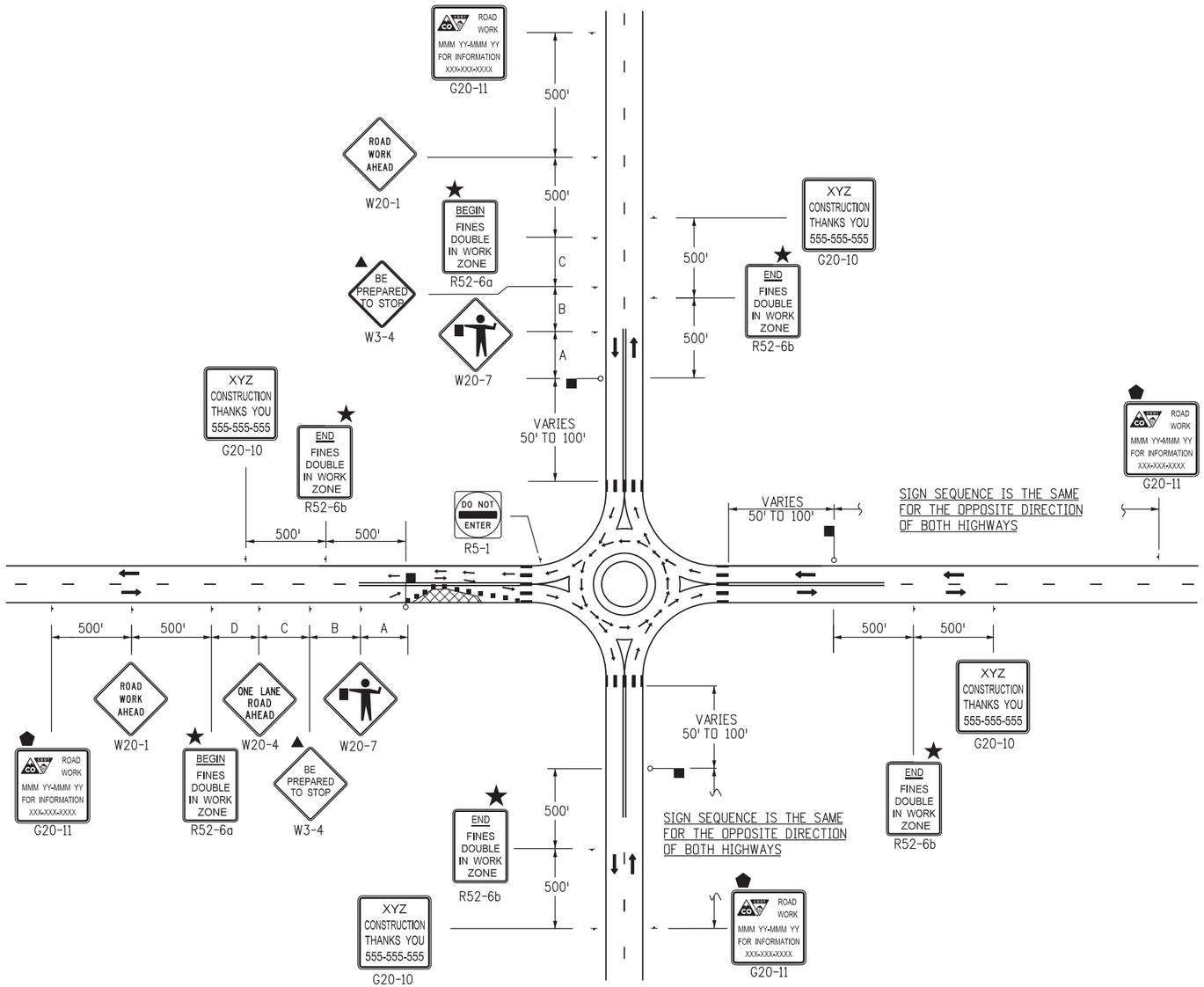

CASE NO. 30
TYPICAL APPLICATION
ROUNDABOUT - PARTIAL CLOSURE NEAR ONE-LANE ROUNDABOUT

LEGEND

- ■ CHANNELIZING DEVICE: FOR TYPE OF DEVICE TO BE USED, SEE THE SCHEDULE OF CONSTRUCTION TRAFFIC CONTROL DEVICES INCLUDED IN THE PLANS. IF PROJECT IS DESIGNATED AS A "SIGNIFICANT PROJECT" (SEE GENERAL NOTE 25), CONCRETE BARRIER SHALL BE USED FOR CHANNELIZATION DEVICES (TEMP) AS DETERMINED BY THE ENGINEER.
- TYPE III BARRICADE
- DIRECTION OF TRAVEL
- WORK AREA
- ADVANCE WARNING FLASHING OR SEQUENCING ARROW PANEL.
- ▲ THESE DEVICES ARE OPTIONAL. THEIR NEED SHALL BE DETERMINED BY DETOUR DESIGN AND/OR SCOPE OF CONSTRUCTION ACTIVITY, AND ARE REQUIRED WHEN THEY ARE INCLUDED IN THE SCHEDULE OF CONSTRUCTION CONTROL DEVICES.
- ◆ THESE DEVICES ARE NOT OPTIONAL IF THE POSTED SPEED LIMIT IN THE WORK ZONE IS REDUCED.
- ⬟ G20-11 SIGN IS REQUIRED WHEN SECTION 626 "PUBLIC INFORMATION INFORMATION SERVICES" PROJECT SPECIAL PROVISION WORKSHEET SPECIFICATION IS REQUIRED WITH PROJECT.
- FLASHING BEACON
- ⬢ REQUIRED WHEN WORK OCCUPIES THE LOCATION FOR MORE THAN 3 DAYS.
- ★ SEE FINES DOUBLE SIGNING NOTES ON SHEET 12.
- TRUCK MOUNTED ATTENUATOR (TMA)
- L TRANSITION TAPER LENGTH:

  L = MINIMUM LENGTH OF TAPER

  SPEED 45 MPH OR MORE: $L = S \times W$

  SPEED 40 MPH OR LESS: $L = \frac{WS^2}{60}$

  S = NUMERICAL VALUE OF SPEED LIMIT OR 85 PERCENTILE SPEED

  W = WIDTH OF OFFSET

  SHOULDER TAPER = 1/3 L
- BUFFER SPACE — SEE GENERAL NOTE 21 ON SHEET 1.
- FLAGGER

ROAD TYPE	DISTANCE BETWEEN SIGNS		
	A	B	C
URBAN (<=40 MPH)	100	100	100
URBAN (>=45 MPH)	350	350	350
RURAL	500	500	500
EXPRESSWAY/FREEWAY	1000	1500	2640

Computer File Information	
Creation Date: 07/04/12	Initials: KEN
Last Modification Date: 12/08/14	Initials: KEN
Full Path: www.coloradodot.info/library/traffic/traffic-s-standard-plans	
Drawing File Name: S-630-01_17of24.dgn	
CAD Ver.: MicroStation V8 Scale: Not to Scale	Units: English

	Sheet Revisions	
	Date:	Comments
R-7	12/08/14	NEW SHEET 17. OLD SHEET 17 NOW SHEET 21
R-X		
R-X		
R-X		

Colorado Department of Transportation
4201 East Arkansas Avenue
Denver, Colorado 80222
Phone: (303) 757-9543
Fax: (303) 757-9219
Safety & Traffic Engineering Branch KCM/KEN

TRAFFIC CONTROLS FOR HIGHWAY CONSTRUCTION

Issued By: Safety & Traffic Engineering Branch July 4, 2012

STANDARD PLAN NO.

S-630-1

Sheet No. 17 of 24 02

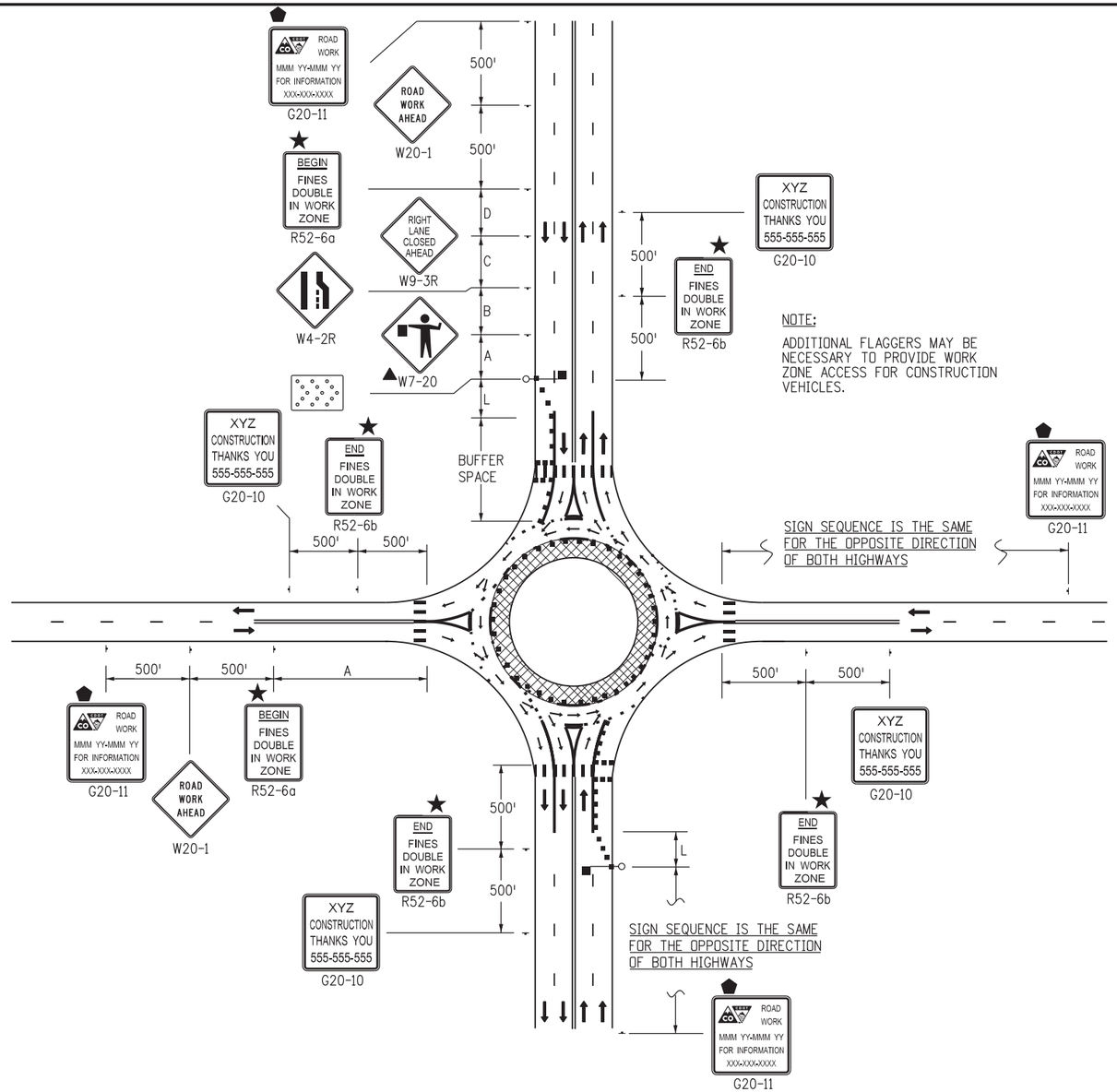

CASE NO. 31
TYPICAL APPLICATION *
ROUNDABOUT - INSIDE LANE CLOSURE FOR TWO-LANE ROUNDABOUT

LEGEND

* A TRUCK DETOUR ROUTE MAY BE NECESSARY TO DIVERT TRUCKS AWAY FROM THE ROUNDABOUT CIRCLE. ALSO NECESSARY IS A STREET NAME AND/OR ROUTE NUMBER SIGN, INFORMING MOTORISTS WHERE THEY NEED TO EXIT THE ROUNDABOUT CIRCLE TO ENTER THE DESIRED STREET AND/OR ROUTE NUMBER.

■ CHANNELIZING DEVICE: FOR TYPE OF DEVICE TO BE USED, SEE THE SCHEDULE OF CONSTRUCTION TRAFFIC CONTROL DEVICES INCLUDED IN THE PLANS. IF PROJECT IS DESIGNATED AS A "SIGNIFICANT PROJECT" (SEE GENERAL NOTE 25), CONCRETE BARRIER SHALL BE USED FOR CHANNELIZATION DEVICES (TEMP) AS DETERMINED BY THE ENGINEER.

TYPE III BARRICADE

DIRECTION OF TRAVEL

WORK AREA

ADVANCE WARNING FLASHING OR SEQUENCING ARROW PANEL.

▲ THESE DEVICES ARE OPTIONAL. THEIR NEED SHALL BE DETERMINED BY DETOUR DESIGN AND/OR SCOPE OF CONSTRUCTION ACTIVITY, AND ARE REQUIRED WHEN THEY ARE INCLUDED IN THE SCHEDULE OF CONSTRUCTION CONTROL DEVICES.

◆ THESE DEVICES ARE NOT OPTIONAL IF THE POSTED SPEED LIMIT IN THE WORK ZONE IS REDUCED.

⬟ G20-11 SIGN IS REQUIRED WHEN SECTION 626 "PUBLIC INFORMATION INFORMATION SERVICES" PROJECT SPECIAL PROVISION WORKSHEET SPECIFICATION IS REQUIRED WITH PROJECT.

FLASHING BEACON

⬢ REQUIRED WHEN WORK OCCUPIES THE LOCATION FOR MORE THAN 3 DAYS.

★ SEE FINES DOUBLE SIGNING NOTES ON SHEET 12.

TRUCK MOUNTED ATTENUATOR (TMA)

L TRANSITION TAPER LENGTH:

L = MINIMUM LENGTH OF TAPER

SPEED 45 MPH OR MORE: $L = S^2 W$

SPEED 40 MPH OR LESS: $L = WS$

S = NUMERICAL VALUE OF SPEED LIMIT OR 85 PERCENTILE SPEED

W = WIDTH OF OFFSET

SHOULDER TAPER = 1/3 L

BUFFER SPACE SEE GENERAL NOTE 21 ON SHEET 1.

FLAGGER

ROAD TYPE	DISTANCE BETWEEN SIGNS		
	A	B	C
URBAN (<=40 MPH)	100	100	100
URBAN (>=45 MPH)	350	350	350
RURAL	500	500	500
EXPRESSWAY/FREEWAY	1000	1500	2640

Computer File Information	
Creation Date: 07/04/12	Initials: KEN
Last Modification Date: 12/08/14	Initials: KEN
Full Path: www.coloradodot.info/library/traffic/traffic-s-standard-plans	
Drawing File Name: S-630-01_18of24.dgn	
CAD Ver.: MicroStation V8 Scale: Not to Scale Units: English	

	Sheet Revisions	
	Date:	Comments
R-7	12/08/14	NEW SHEET 18. OLD SHEET 18 NOW SHEET 22
R-X		
R-X		
R-X		

Colorado Department of Transportation
4201 East Arkansas Avenue
Denver, Colorado 80222
Phone: (303) 757-9543
Fax: (303) 757-9219
Safety & Traffic Engineering Branch KCM/KEN

TRAFFIC CONTROLS FOR HIGHWAY CONSTRUCTION

Issued By: Safety & Traffic Engineering Branch July 4, 2012

STANDARD PLAN NO.
S-630-1
Sheet No. 18 of 24

-?-

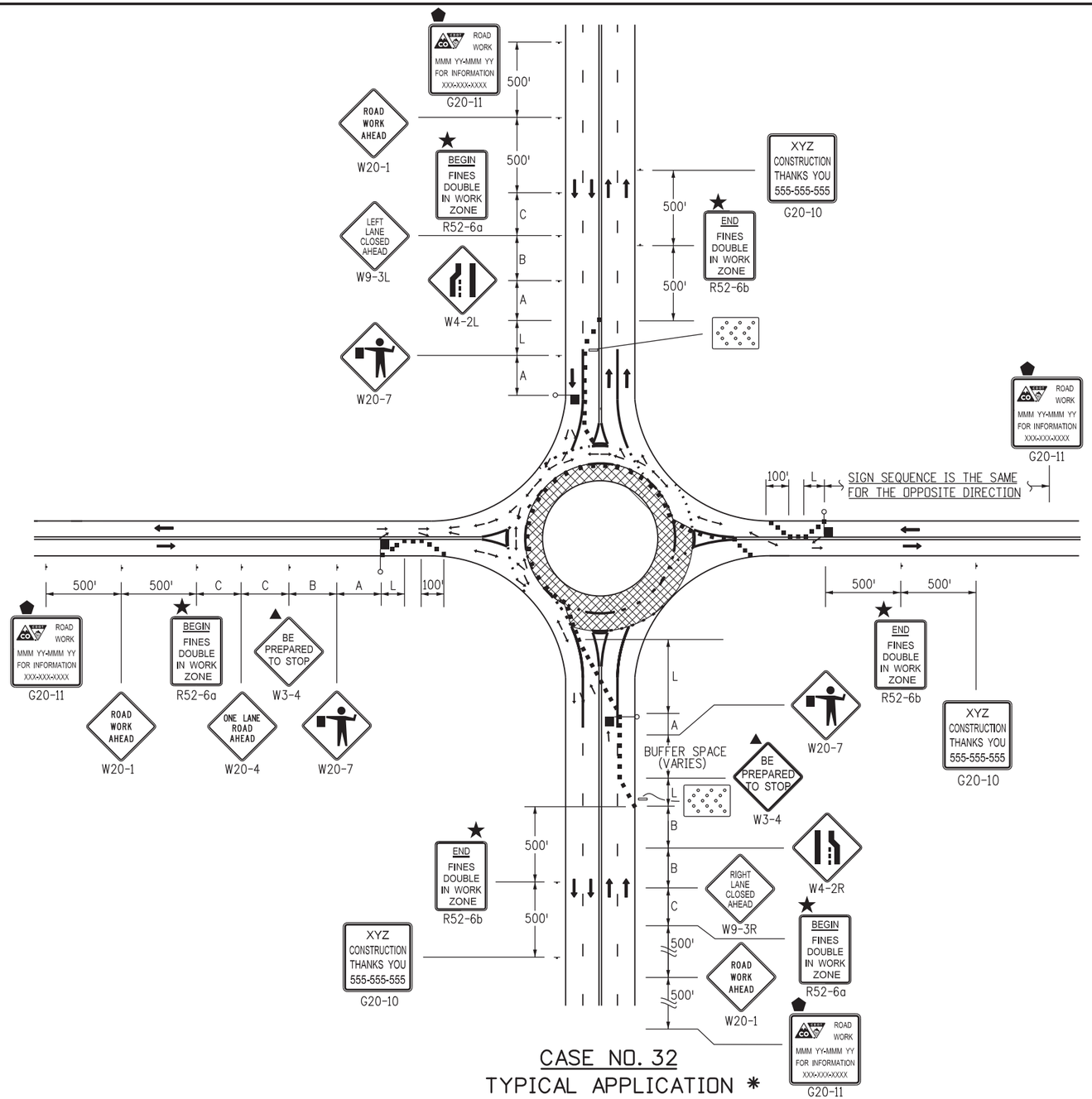

CASE NO. 32
TYPICAL APPLICATION *
ROUNDABOUT - OUTSIDE LANE CLOSURE FOR TWO-LANE ROUNDABOUT

LEGEND

* A TRUCK DETOUR ROUTE MAY BE NECESSARY TO DIVERT TRUCKS AWAY FROM THE ROUNDABOUT CIRCLE. ALSO NECESSARY IS A STREET NAME AND/OR ROUTE NUMBER SIGN, INFORMING MOTORISTS WHERE THEY NEED TO EXIT THE ROUNDABOUT CIRCLE TO ENTER THE DESIRED STREET AND/OR ROUTE NUMBER.

■ CHANNELIZING DEVICE: FOR TYPE OF DEVICE TO BE USED, SEE THE SCHEDULE OF CONSTRUCTION TRAFFIC CONTROL DEVICES INCLUDED IN THE PLANS. IF PROJECT IS DESIGNATED AS A "SIGNIFICANT PROJECT" (SEE GENERAL NOTE 25), CONCRETE BARRIER SHALL BE USED FOR CHANNELIZATION DEVICES (TEMP) AS DETERMINED BY THE ENGINEER.

TYPE III BARRICADE

DIRECTION OF TRAVEL

WORK AREA

ADVANCE WARNING FLASHING OR SEQUENCING ARROW PANEL.

▲ THESE DEVICES ARE OPTIONAL. THEIR NEED SHALL BE DETERMINED BY DETOUR DESIGN AND/OR SCOPE OF CONSTRUCTION ACTIVITY, AND ARE REQUIRED WHEN THEY ARE INCLUDED IN THE SCHEDULE OF CONSTRUCTION CONTROL DEVICES.

◆ THESE DEVICES ARE NOT OPTIONAL IF THE POSTED SPEED LIMIT IN THE WORK ZONE IS REDUCED.

⬟ G20-11 SIGN IS REQUIRED WHEN SECTION 626 "PUBLIC INFORMATION INFORMATION SERVICES" PROJECT SPECIAL PROVISION WORKSHEET SPECIFICATION IS REQUIRED WITH PROJECT.

FLASHING BEACON

⬢ REQUIRED WHEN WORK OCCUPIES THE LOCATION FOR MORE THAN 3 DAYS.

★ SEE FINES DOUBLE SIGNING NOTES ON SHEET 12.

TRUCK MOUNTED ATTENUATOR (TMA)

L TRANSITION TAPER LENGTH: =

L = MINIMUM LENGTH OF TAPER $= \frac{WS^2}{60}$

SPEED 45 MPH OR MORE: L $= S \times W$

SPEED 40 MPH OR LESS: L

S = NUMERICAL VALUE OF SPEED LIMIT OR 85 PERCENTILE SPEED

W = WIDTH OF OFFSET

SHOULDER TAPER = 1/3 L

BUFFER SPACE — SEE GENERAL NOTE 21 ON SHEET 1.

FLAGGER

ROAD TYPE	DISTANCE BETWEEN SIGNS		
	A	B	C
URBAN (<=40 MPH)	100	100	100
URBAN (>=45 MPH)	350	350	350
RURAL	500	500	500
EXPRESSWAY/FREEWAY	1000	1500	2640

Computer File Information		
Creation Date: 07/04/12	Initials: KEN	
Last Modification Date: 12/08/14	Initials: KEN	R-7
Full Path: www.coloradodot.info/library/traffic/traffic-s-standard-plans		R-X
Drawing File Name: S-630-01_19of24.dgn		R-X
CAD Ver.: MicroStation V8 Scale: Not to Scale Units: English		R-X

Sheet Revisions	
Date:	Comments
12/08/14	NEW SHEET 19. OLD SHEET 19 NOW SHEET 23

Colorado Department of Transportation
4201 East Arkansas Avenue
Denver, Colorado 80222
Phone: (303) 757-9543
Fax: (303) 757-9219
Safety & Traffic Engineering Branch KCM/KEN

TRAFFIC CONTROLS FOR HIGHWAY CONSTRUCTION

Issued By: Safety & Traffic Engineering Branch July 4, 2012

STANDARD PLAN NO.

S-630-1

Sheet No. 19 of 24 04

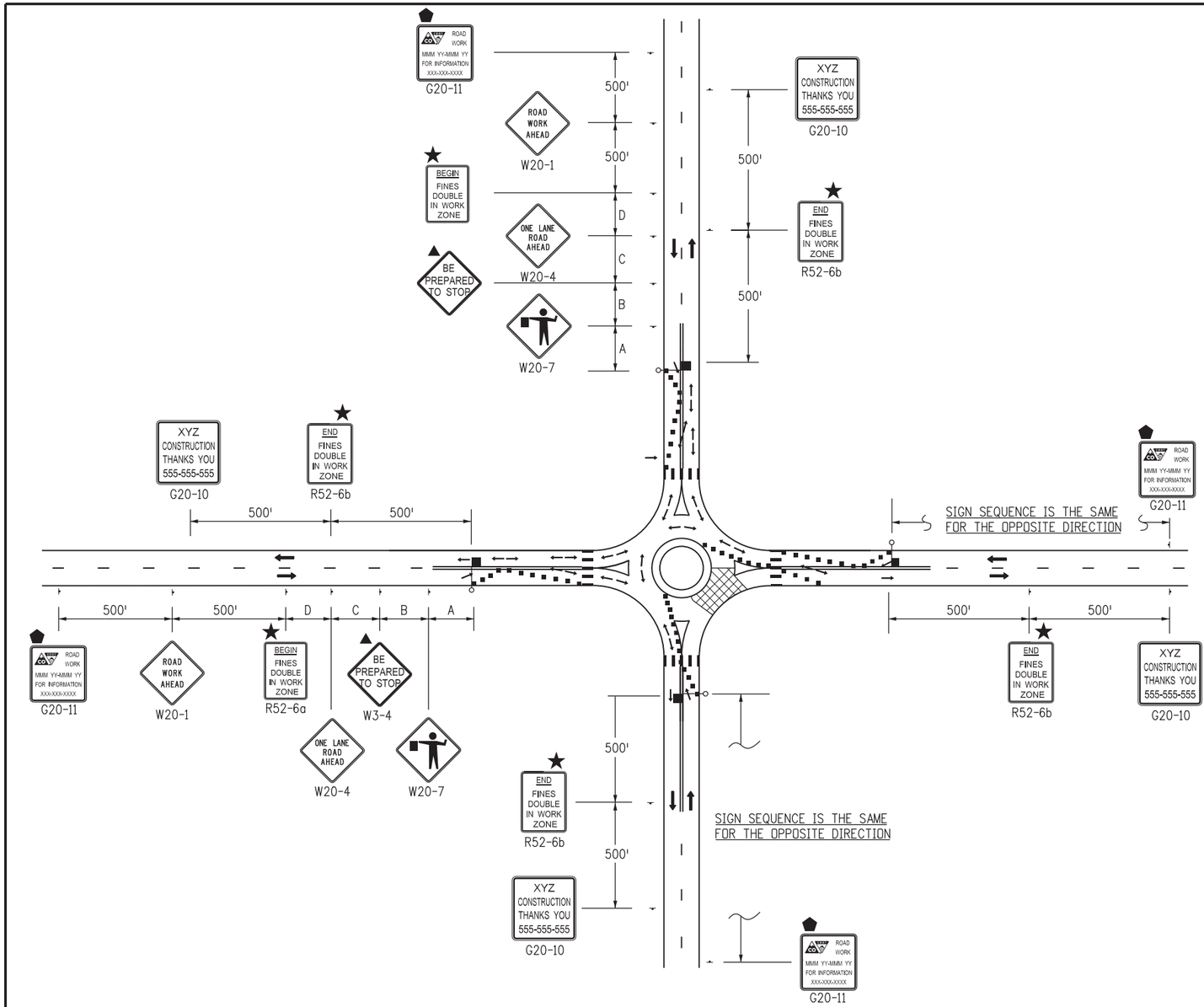

CASE NO. 33

TYPICAL APPLICATION *

ROUNDABOUT - PARTIAL CLOSURE FOR ONE-LANE ROUNDABOUT

LEGEND

* A TRUCK DETOUR ROUTE MAY BE NECESSARY TO DIVERT TRUCKS AWAY FROM THE ROUNDABOUT CIRCLE. ALSO NECESSARY IS A STREET NAME AND/OR ROUTE NUMBER SIGN, INFORMING MOTORISTS WHERE THEY NEED TO EXIT THE ROUNDABOUT CIRCLE TO ENTER THE DESIRED STREET AND/OR ROUTE NUMBER.

■ CHANNELIZING DEVICE: FOR TYPE OF DEVICE TO BE USED, SEE THE SCHEDULE OF CONSTRUCTION TRAFFIC CONTROL DEVICES INCLUDED IN THE PLANS. IF PROJECT IS DESIGNATED AS A "SIGNIFICANT PROJECT" (SEE GENERAL NOTE 25), CONCRETE BARRIER SHALL BE USED FOR CHANNELIZATION DEVICES (TEMP) AS DETERMINED BY THE ENGINEER.

TYPE III BARRICADE

DIRECTION OF TRAVEL

WORK AREA

ADVANCE WARNING FLASHING OR SEQUENCING ARROW PANEL.

▲ THESE DEVICES ARE OPTIONAL. THEIR NEED SHALL BE DETERMINED BY DETOUR DESIGN AND/OR SCOPE OF CONSTRUCTION ACTIVITY, AND ARE REQUIRED WHEN THEY ARE INCLUDED IN THE SCHEDULE OF CONSTRUCTION CONTROL DEVICES.

◆ THESE DEVICES ARE NOT OPTIONAL IF THE POSTED SPEED LIMIT IN THE WORK ZONE IS REDUCED.

⬟ G20-11 SIGN IS REQUIRED WHEN SECTION 626 "PUBLIC INFORMATION INFORMATION SERVICES" PROJECT SPECIAL PROVISION WORKSHEET SPECIFICATION IS REQUIRED WITH PROJECT.

FLASHING BEACON

⬢ REQUIRED WHEN WORK OCCUPIES THE LOCATION FOR MORE THAN 3 DAYS.

★ SEE FINES DOUBLE SIGNING NOTES ON SHEET 12.

TRUCK MOUNTED ATTENUATOR (TMA)

L TRANSITION TAPER LENGTH:

L = MINIMUM LENGTH OF TAPER

SPEED 45 MPH OR MORE: $L = \frac{WS^2}{60}$

SPEED 40 MPH OR LESS: L

S = NUMERICAL VALUE OF SPEED LIMIT OR 85 PERCENTILE SPEED

W = WIDTH OF OFFSET

SHOULDER TAPER = 1/3 L

BUFFER SPACE SEE GENERAL NOTE 21 ON SHEET 1.

FLAGGER

ROAD TYPE	DISTANCE BETWEEN SIGNS		
	A	B	C
URBAN (<=40 MPH)	100	100	100
URBAN (>=45 MPH)	350	350	350
RURAL	500	500	500
EXPRESSWAY/FREEWAY	1000	1500	2640

Computer File Information	
Creation Date: 07/04/12	Initials: KEN
Last Modification Date: 12/08/14	Initials: KEN
Full Path: www.coloradodot.info/library/traffic/traffic-s-standard-plans	
Drawing File Name: S-630-01_20of24.dgn	
CAD Ver.: MicroStation V8 Scale: Not to Scale Units: English	

	Sheet Revisions	
	Date:	Comments
R-7	12/08/14	NEW SHEET 20. OLD SHEET 20 NOW SHEET 24
R-X		
R-X		
R-X		

Colorado Department of Transportation
4201 East Arkansas Avenue
Denver, Colorado 80222
Phone: (303) 757-9543
Fax: (303) 757-9219
Safety & Traffic Engineering Branch KCM/KEN

TRAFFIC CONTROLS FOR HIGHWAY CONSTRUCTION

Issued By: Safety & Traffic Engineering Branch July 4, 2012

STANDARD PLAN NO.

S-630-1

Sheet No. 20 of 24 05

LEGEND

- VEHICLE WITH TRUCK-MOUNTED ATTENUATORS (TMA), TWO 360-DEGREE YELLOW FLASHING BEACONS, AND YELLOW FLASHING VEHICLE LIGHTS OR STROBES.
- VMS — VARIABLE MESSAGE SIGN (VMS).
- ▲ WHEN VMS IS USED, THE "SHOULDER CLOSED" SIGN BECOMES OPTIONAL.
- ■ THE "PICK-UP VEHICLES" OR "WARNING VEHICLE" MAY ENCROACH INTO THE TRAFFIC LANE WHEN THE SHOULDER IS TOO NARROW TO DRIVE ON.
- ● IF TRACKING OF THE WET PAINT IS ANTICIPATED, THE USE OF CONES OR STATIONARY "WET PAINT" SIGNS SHALL BE POSTED.
- ⬢ THE VARIABLE SEPARATION DISTANCE BETWEEN THE "CONE PLACEMENT VEHICLE" AND "CONE PICKUP VEHICLE" SHALL BE DETERMINED BY THE TRACK DRYING TIME OF THE PAVEMENT MARKING MATERIAL.
- ⬬ OPTIONAL

FOLLOWING DISTANCE CHART FOR WARNING AND MOBILE ATTENUATOR (OR CONE PICKUP) VEHICLE

POSTED WZ SPEED LIMIT (MPH)	FOLLOWING DISTANCE (FEET)
0 - 30	250 - 550
35 - 40	325 - 700
45 - 50	600 - 900
55	750 - 1200
60 - 65	1000 - 1400
70 - 75	1200 - 1600

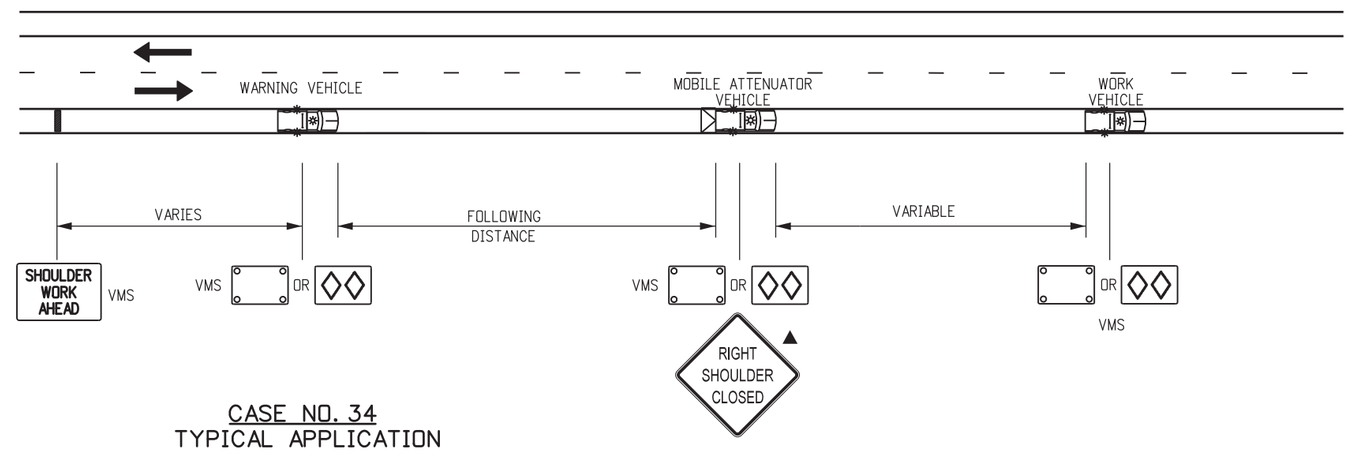

CASE NO. 34
TYPICAL APPLICATION
MOBILE WORK ZONE
MOBILE SHOULDER CLOSURE ON 2-LANE UNDIVIDED HIGHWAY

NOTE

THE VARIABLE SEPARATION DISTANCE BETWEEN THE "CONE PLACEMENT VEHICLE" AND "CONE PICKUP VEHICLE" SHALL BE DETERMINED BY THE TRACK DRYING TIME OF THE PAVEMENT MARKING MATERIAL.

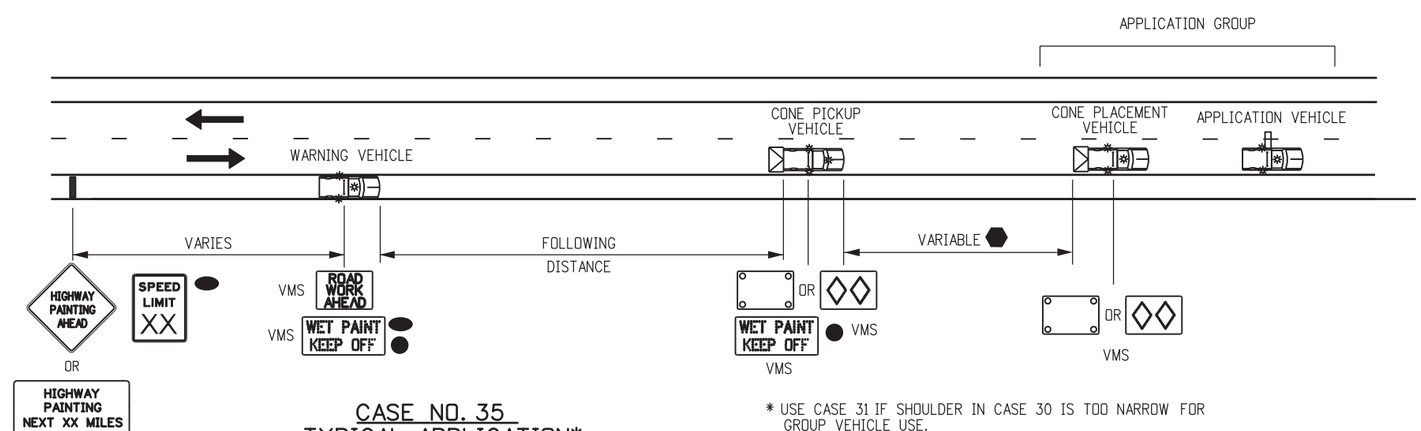

* USE CASE 31 IF SHOULDER IN CASE 30 IS TOO NARROW FOR GROUP VEHICLE USE.

CASE NO. 35
TYPICAL APPLICATION*
MOBILE PAVEMENT MARKING ZONE
CENTERLINE STRIPING ON 2-LANE UNDIVIDED HIGHWAY

Computer File Information		
Creation Date: 07/04/12	Initials: KEN	
Last Modification Date: 12/8/14	Initials: KEN	R-5
Full Path: www.coloradodot.info/library/traffic/traffic-s-standard-plans		R-7
Drawing File Name: S-630-1_21of24.dgn		R-X
CAD Ver.: MicroStation V8 Scale: Not to Scale Units: English		R-X

Sheet Revisions	
Date:	Comments
3/27/14	REDUCED NUMBER OF TMA VEHICLES, REVISE VMS AND ADD STATIONARY SIGNS
12/8/14	FORMERLY SHEET 17.

Colorado Department of Transportation
4201 East Arkansas Avenue
Denver, Colorado 80222
Phone: (303) 757-9543
Fax: (303) 757-9219
Safety & Traffic Engineering Branch KCM/KEN

TRAFFIC CONTROLS FOR HIGHWAY CONSTRUCTION

Issued By: Safety & Traffic Engineering Branch July 4, 2012

STANDARD PLAN NO.
S-630-1
Sheet No. 21 of 24 106

FOR CASE #32, VEHICLE/SIGN SEQUENCE IS THE SAME FOR THE LEFT SIDE OF HIGHWAY, WHILE TAPER IS MIRRORED ABOUT THE CENTER LANE, WHEN MOBILE WORK ZONE IS LOCATED ON THE LEFT SIDE OF HIGHWAY.

LEGEND

- VEHICLE WITH TRUCK-MOUNTED ATTENUATORS (TMA), TWO 360-DEGREE YELLOW FLASHING BEACONS, AND YELLOW FLASHING VEHICLE LIGHTS OR STROBES.
- ADVANCE WARNING FLASHING OR SEQUENCING ARROW PANEL.
- AHEAD / LANE CLOSED — PORTABLE VARIABLE MESSAGE SIGN (VMS).
- ▲ WHEN THE VMS IS USED, THE "SHOULDER CLOSED" (W21-5aX) OR W21-5bX), AND "RAMP CLOSED AHEAD" SIGNS BECOME OPTIONAL.
- ● IF TRACKING OF THE WET PAINT IS ANTICIPATED, THE USE OF CONES OR STATIONARY "WET PAINT" SIGNS SHALL BE POSTED.
- ⬢ THE VARIABLE SEPARATION DISTANCE BETWEEN THE "CONE PLACEMENT VEHICLE" AND "CONE PICKUP VEHICLE" SHALL BE DETERMINED BY THE TRACK DRYING TIME OF THE PAVEMENT MARKING MATERIAL.
- ⬬ OPTIONAL

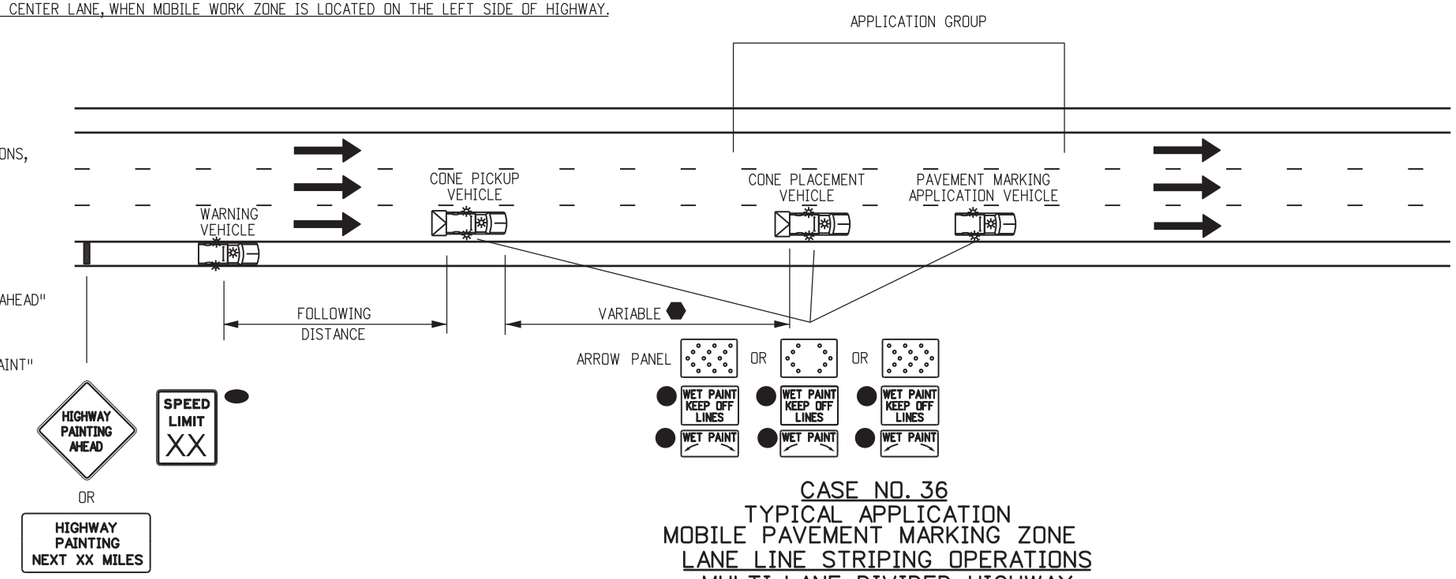

CASE NO. 36
TYPICAL APPLICATION
MOBILE PAVEMENT MARKING ZONE
LANE LINE STRIPING OPERATIONS
MULTI-LANE DIVIDED HIGHWAY

FOLLOWING DISTANCE CHART FOR WARNING VEHICLE AND CONE PICKUP VEHICLES

POSTED WZ SPEED LIMIT (MPH)	FOLLOWING DISTANCE (FEET)
0 - 30	250 - 550
35 - 40	325 - 700
45 - 50	600 - 900
55	750 - 1200
60 - 65	1000 - 1400
70 - 75	1200 - 1600

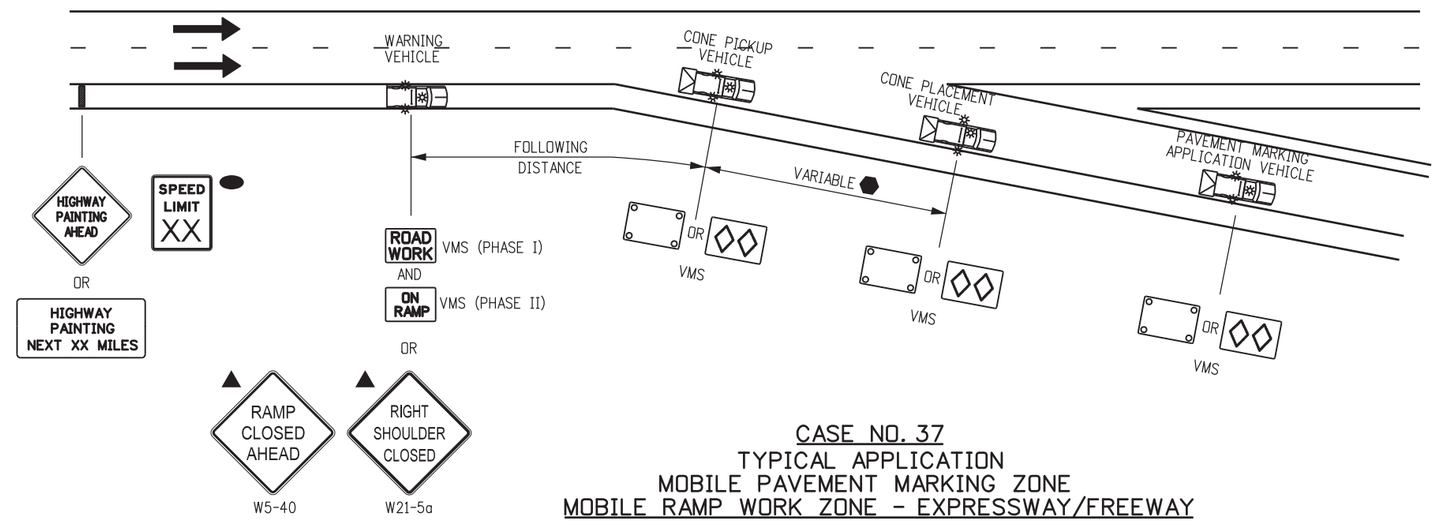

CASE NO. 37
TYPICAL APPLICATION
MOBILE PAVEMENT MARKING ZONE
MOBILE RAMP WORK ZONE - EXPRESSWAY/FREEWAY

NOTES

1. THE SIGNING VEHICLES MAY ENCROACH INTO THE TRAFFIC LANE WHEN THE SHOULDER IS TOO NARROW TO DRIVE ON.
2. IF THE RAMP CANNOT BE REOPENED WITHIN 15 MINUTES, USE CASE NO. 22 OF THE S-630-1 STANDARD PLAN.

Computer File Information	
Creation Date: 07/04/12	Initials: KEN
Last Modification Date: 12/8/14	Initials: KEN
Full Path: www.coloradodot.info/library/traffic/traffic-s-standard-plans	
Drawing File Name: S-630-1_22of24.dgn	
CAD Ver.: MicroStation V8 Scale: Not to Scale Units: English	

	Sheet Revisions	
	Date:	Comments
R-5	3/27/14	REDUCE NUMBER OF TMA VEHICLES, REVISE VMS, AND ADD STATIONARY SIGNS
R-7	12/8/14	FORMERLY SHEET 18. SIGN CODE UPDATE. W5-40 & W21-5a.
R-X		
R-X		

Colorado Department of Transportation
4201 East Arkansas Avenue
Denver, Colorado 80222
Phone: (303) 757-9543
Fax: (303) 757-9219
Safety & Traffic Engineering Branch KCM/KEN

TRAFFIC CONTROLS FOR HIGHWAY CONSTRUCTION

Issued By: Safety & Traffic Engineering Branch July 4, 2012

STANDARD PLAN NO.
S-630-1
Sheet No. 22 of 24

LEGEND

VEHICLE WITH TRUCK-MOUNTED ATTENUATORS (TMA), TWO 360-DEGREE YELLOW FLASHING BEACONS, AND YELLOW FLASHING VEHICLE LIGHTS OR STROBES.

ADVANCE WARNING FLASHING OR SEQUENCING ARROW PANEL.

LANE CLOSED — PORTABLE VARIABLE MESSAGE SIGN (VMS).

▲ WHEN THE VMS IS USED, THE "RIGHT LANE CLSED AHEAD" (W9-3X) SIGN BECOMES OPTIONAL.

■ THE "CONE PICK-UP VEHICLE" OR "WARNING VEHICLE" MAY ENCROACH INTO THE TRAFFIC LANE WHEN THE SHOULDER IS TOO NARROW TO DRIVE ON.

NOTES

1. IN ROADWAY WHERE THE AADT IS 2,000 OR LESS, A SINGLE WORK VEHICLE WITH APPROPRIATE WARNING DEVICES ON THE VEHICLE MAY BE USED.
2. RADIO COMMUNICATIONS BETWEEN THE WORKCREW AND THE MOVING BLOCKADE ARE REQUIRED TO ADJUST THE BLOCKADE TO INCREASE OR DECREASE THE CLOSURE TIME. RELEASE TRAFFIC ONLY AFTER CONFIRMATION THAT ALL WORKERS AND THEIR VEHICLES ARE CLEAR OF THE ROADWAY.
3. IF APPLICABLE, ALL RAMPS AND ACCESS BETWEEN THE MOVING BLOCKADE AND WORK OPERATION AREA SHALL BE TEMPORARILY CLOSED USING TRAFFIC CONTROL EQUIPMENT AND PERSONNEL. EACH RAMP MUST REMAIN CLOSED UNTIL THE CREW DOING THE WORK GIVES THE "ALL CLEAR" SIGNAL OR UNTIL THE FRONT OF THE MOVING BLOCKADE PASSES THE CLOSED RAMP(S).

FOLLOWING DISTANCE CHART FOR WARNING VEHICLE AND SIGNING VEHICLES

POSTED WZ SPEED LIMIT (MPH)	FOLLOWING DISTANCE (FEET)
0 - 30	250 - 550
35 - 40	325 - 700
45 - 50	600 - 900
55	750 - 1200
60 - 65	1000 - 1400
70 - 75	1200 - 1600

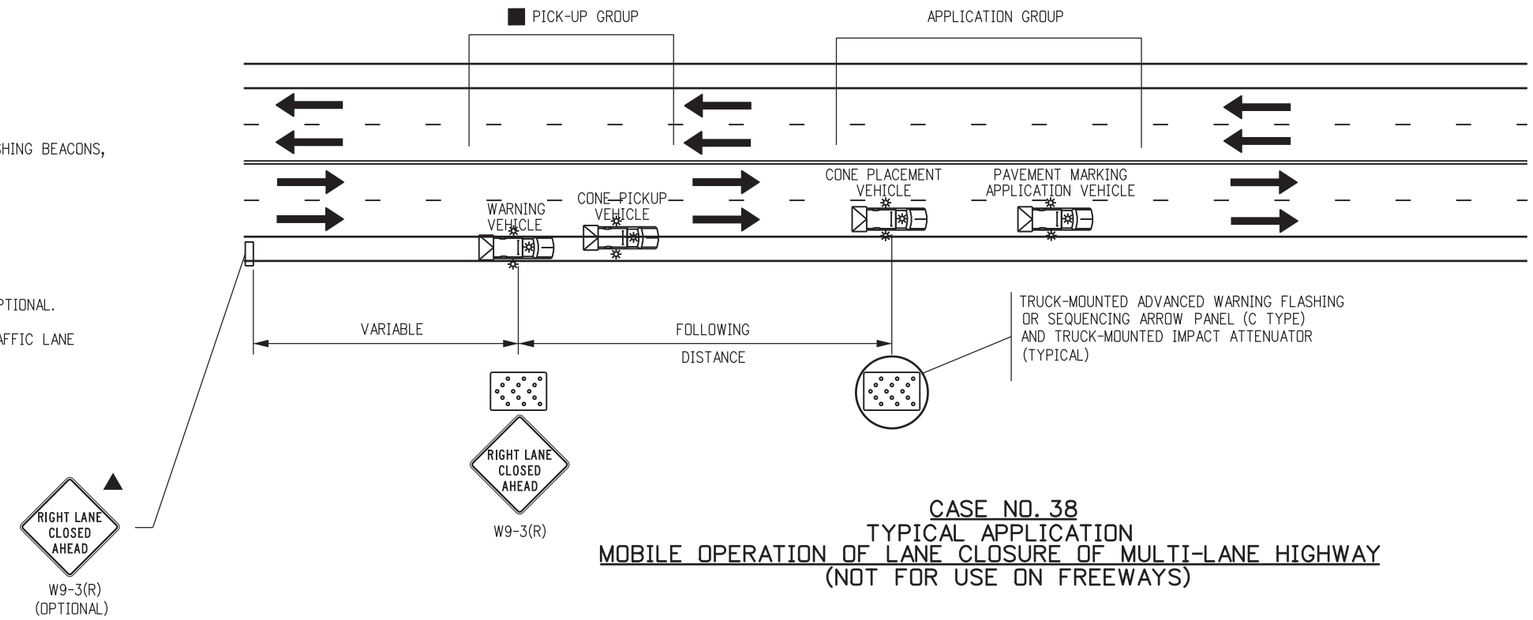

CASE NO. 38
TYPICAL APPLICATION
MOBILE OPERATION OF LANE CLOSURE OF MULTI-LANE HIGHWAY
(NOT FOR USE ON FREEWAYS)

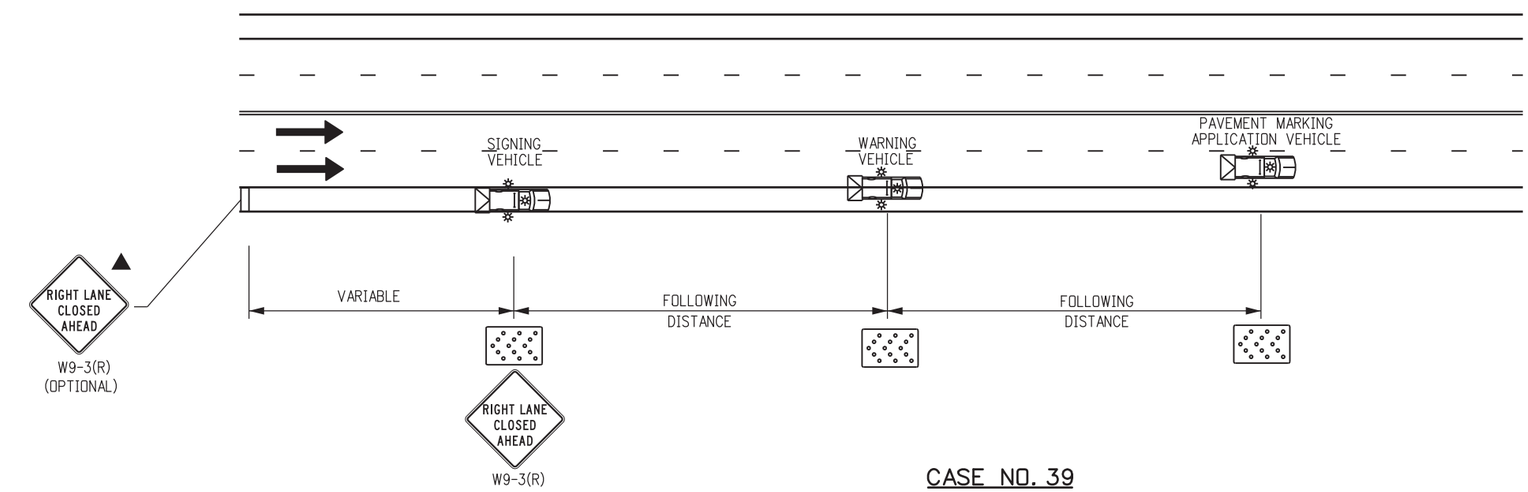

CASE NO. 39
TYPICAL APPLICATION
MOBILE OPERATION OF LANE CLOSURE OF MULTI-LANE HIGHWAY

Computer File Information		
Creation Date: 07/04/12	Initials: KEN	
Last Modification Date: 12/8/14	Initials: KEN	R-7
Full Path: www.coloradodot.info/library/traffic/traffic-s-standard-plans		R-X
Drawing File Name: S-630-1_23of24.dgn		R-X
CAD Ver.: MicroStation V8 Scale: Not to Scale Units: English		R-X

Sheet Revisions	
Date:	Comments
12/8/14	FORMERLY SHEET 19.

Colorado Department of Transportation
4201 East Arkansas Avenue
Denver, Colorado 80222
Phone: (303) 757-9543
Fax: (303) 757-9219
Safety & Traffic Engineering Branch KCM/KEN

TRAFFIC CONTROLS FOR HIGHWAY CONSTRUCTION

Issued By: Safety & Traffic Engineering Branch July 4, 2012

STANDARD PLAN NO.
S-630-1
Sheet No. 23 of 24

TYPICAL CONSTRUCTION ZONE SIGNS

THESE SIGNING NOTES ARE INTENDED AS A QUICK REFERENCE
FOR TYPICAL SIGN USE AND PLACEMENT IN CONSTRUCTION ZONES.

G20-1 "ROAD/WORK/NEXT XX MILES" - THIS SIGN SHALL BE ERECTED AT THE LIMITS OF ANY ROAD CONSTRUCTION OR MAINTENANCE PROJECT OF MORE THAN TWO (2) MILES IN LENGTH WHERE TRAFFIC IS MAINTAINED THROUGH THE PROJECT.

G20-4 "PILOT CAR/FOLLOW ME" - THIS SIGN SHALL BE MOUNTED IN A CONSPICUOUS POSITION ON THE REAR OF A VEHICLE USED FOR GUIDING ONE-WAY TRAFFIC THROUGH OR AROUND THE PROJECT.

G20-5P "WORK ZONE" - THIS PLAQUE SHALL BE MOUNTED JUST ABOVE THE WORK ZONE SPEED LIMIT SIGNS PRIOR TO THE WORK ZONE AREA.

G20-10 THANK YOU SIGN - THIS SIGN SHOULD BE ERECTED APPROXIMATELY 500 FEET BEYOND THE END OF THE PROJECT.

G20-11 CONSTRUCTION PROJECT INFORMATION SIGN - THIS SIGN SHOULD BE ERECTED AS DESCRIBED IN THE SECTION 626 STANDARD SPECIFICATION.

G20-55(X) "X MINUTE CLOSURE. EXPECT DELAYS" - THIS SIGN IS INTENDED FOR USE 500 FEET PAST THE "WORK ZONE"/SPEED LIMIT SIGN.

M4-9( ) "DETOUR/<<<<" - THIS SIGN IS USED FOR UNNUMBERED ROUTES; FOR USE IN EMERGENCY SITUATIONS; FOR PERIODS OF SHORT DURATION; OR WHERE, OVER RELATIVELY SHORT DISTANCES. IT IS NOT NECESSARY TO SHOW ROUTE MARKERS TO GUIDE TRAFFIC ALONG THE DETOUR AND BACK TO ITS AUTHORIZED ROUTE.

M4-10( ) "DETOUR ARROW" - THIS SIGN SHOULD BE MOUNTED JUST BELOW THE ROAD CLOSED SIGN AT THE POINT WHERE THE DETOUR ROADWAY OR ROUTE HAS BEEN ESTABLISHED DUE TO THE CLOSURE OF THE STREET OR HIGHWAY TO THROUGH TRAFFIC.

R2-1( ) "SPEED/LIMIT/XX" - THESE SIGNS ARE INTENDED TO REDUCE TRAFFIC SPEED IN ADVANCE OF THE DAILY WORK AREA WITHIN THE OVERALL PROJECT LIMITS.

R2-1(XX) "SPEED/LIMIT/XX" - THIS SIGN IS INTENDED FOR USE 500 FEET PAST THE "THANK YOU" SIGN TO BRING TRAFFIC BACK TO ORIGINAL POSTED SPEED.

R2-6P "FINES DOUBLE" - THIS SIGN IS INTENDED FOR USE WITHIN WORK ZONES TO PROVIDE NOTICE OF INCREASED FINES FOR TRAFFIC VIOLATIONS WITHIN WORK ZONES.

R4-1 "DO NOT PASS" - THIS SIGN SHOULD BE PLACED AT TRANSITION TAPER POINT.

R4-2 "PASS WITH CARE" - THIS SIGN SHOULD BE PLACED AT TRANSITION TAPER POINT.

R11-2 "ROAD/CLOSED" - THIS SIGN IS TO BE MOUNTED ON THE BARRICADE THAT IS PLACED BEFORE THE WORK ZONE ENTRANCE TO PROHIBIT TRAFFIC FROM ENTERING THE WORK ZONE.

R11-3 "ROAD CLOSED/X MILES AHEAD/L.T.O. - THIS SIGN SHOULD BE PLACED WHERE THROUGH TRAFFIC MUST DETOUR TO AVOID THE CLOSURE OF THE ROAD SOME DISTANCE BEYOND, BUT WHERE THE ROAD IS OPEN TO LOCAL TRAFFIC UP TO THE POINT OF CLOSURE.

R11-4 "ROAD CLOSED/TO/THRU TRAFFIC" FOR URBAN USE - THIS SIGN SHOULD BE PLACED WHERE THROUGH TRAFFIC MUST DETOUR TO AVOID THE CLOSURE OF THE ROAD SOME DISTANCE BEYOND, BUT WHERE THE ROAD IS OPEN TO LOCAL TRAFFIC UP TO THE POINT OF CLOSURE.

R52-6a "BEGIN FINES DOUBLE IN WORK ZONE" SIGN IS PLACED AT THE BEGINNING OF THE ADVANCED WARNING AREA OF THE TRAFFIC CONTROL ZONE.

R52-6b "END FINES DOUBLE IN WORK ZONE" SIGN IS PLACED AFTER WORK ZONE AREA, PAST DOWNSTREAM TAPER SECTION.

W1-1( ) "TURN ARROW" - THIS SIGN IS INTENDED FOR USE WHERE ENGINEERING INVESTIGATIONS OF ROADWAY CONDITIONS SHOW THE RECOMMENDED SPEED ON THE TURN TO BE 30 MPH OR LESS.✱

W1-2( ) "CURVE ARROW" - THIS SIGN IS INTENDED FOR USE WHERE ENGINEERING INVESTIGATIONS OF ROADWAY CONDITIONS SHOW THE RECOMMENDED SPEED ON THE CURVE TO BE IN THE RANGE BETWEEN 30 AND 60 MILES PER HOUR.✱

W1-3( ) "REVERSE TURN ARROW" - THIS SIGN IS INTENDED FOR USE WHERE TWO TURNS OR THE CURVE AND A TURN IN OPPOSITE DIRECTIONS ARE SEPARATED BY A TANGENT OF LESS THAN 600 FEET.✱

W1-4( ) "REVERSE CURVE ARROW" - THIS SIGN IS INTENDED FOR USE WHERE TWO CURVES IN OPPOSITE DIRECTIONS ARE SEPARATED BY A TANGENT OF LESS THAN 600 FEET.✱

W1-6( ) "ARROW" - THIS SIGN SHOULD BE MOUNTED JUST BELOW THE ROAD CLOSED SIGN AT THE POINT WHERE THE DIVERSION HAS BEEN ESTABLISHED DUE TO THE LANE CLOSURE.

W3-2 "YIELD AHEAD" - THIS SIGN IS INTENDED FOR USE AT THE APPROACH TO THE YIELD SIGN THAT IS NOT VISIBLE FOR A SUFFICIENT DISTANCE TO PERMIT THE DRIVER TO BRING HIS VEHICLE TO A STOP AT THE YIELD SIGN.✱

W3-4 "BE PREPARED TO STOP" - THIS SIGN TO BE PLACED 1.5 MILES IN ADVANCED OF A FLAGGER.

W4-2(X) "LEFT (RIGHT) LANE TRANSITION SYMBOL" - THIS SIGN IS INTENDED FOR USE IN ADVANCE OF THE REDUCTION IN THE NUMBER OF TRAFFIC LANES IN THE DIRECTION OF TRAVEL ON THE MULTILANE HIGHWAY.✱

W4-50 "USE BOTH LANES DURING CONGESTION" - THIS SIGN IS INTENDED FOR USE IN ADVANCE OF THE "ROAD WORK X MILE" ADVANCED WARNING SIGN.

W4-51 "USE BOTH LANES TO MERGE POINT" - THIS SIGN IS INTENDED TO DIRECT MOTORISTS TO USE BOTH TRAVEL LANES UNTIL THE LANES ARE REDUCED TO ONE LANE.

W4-52 "TAKE TURNS MERGE HERE" - THIS SIGN IS INTENDED TO WARN MOTORISTS IN ADVANCED TO MOVE FROM THE CLOSED TRAVEL LANE TO THE OPEN TRAVEL LANE, USUALLY 500 FEET IN ADVANCED OF THE START OF THE TRANSITION TAPER .

W5-1 "ROAD NARROWS" - THIS SIGN IS INTENDED FOR USE IN ADVANCE OF THE TRANSITION ON THE ROAD WHERE THE PAVEMENT WIDTH IS REDUCED ABRUPTLY TO A WIDTH SUCH THAT TWO CARS CANNOT PASS WITHOUT REDUCING SPEED.✱

W5-2a "NARROW BRIDGE SYMBOL" - THIS SIGN IS INTENDED FOR USE IN ADVANCE OF A BRIDGE OR CULVERT HAVING A CLEAR TWO-WAY ROADWAY WIDTH OF 16 TO 18 FEET OR ANY BRIDGE OR CULVERT HAVING A ROADWAY CLEARANCE LESS THAN THE WIDTH OF THE APPROACH PAVEMENT.✱

W5-3 "ONE LANE/BRIDGE" - THIS SIGN SHOULD BE PLACED ON TWO-WAY ROADWAYS IN ADVANCE OF THE BRIDGES OR CULVERTS WHERE THE ROADWAY WIDTH IS LESS THAN 16 FEET (18 FEET FOR COMMERCIAL VEHICLES) OR WHEN THE ALIGNMENT IS POOR ON THE APPROACH TO THE STRUCTURE HAVING A CLEAR ROADWAY WIDTH OF 18 FEET OR LESS✱

W6-1 "DIVIDED HIGHWAY SYMBOL" - THIS SIGN SHOULD BE PLACED ON THE APPROACHES TO THE SECTION OF HIGHWAY WHERE OPPOSING FLOWS OF TRAFFIC ARE SEPARATED BY A PHYSICAL MEDIAN.

W6-2 "DIVIDED HIGHWAY ENDS SYMBOL" - THIS SIGN SHOULD BE PLACED AT THE END OF THE SECTION OF PHYSICALLY DIVIDED HIGHWAY AS A WARNING OF TWO-WAY TRAFFIC AHEAD.

W6-3 "TWO-WAY TRAFFIC SYMBOL" - THIS SIGN IS INTENDED FOR USE TO GIVE WARNING OF TRANSITION FROM A SEPARATED ONE-WAY ROADWAY TO A TWO-WAY ROADWAY.✱

W7-1 "HILL SYMBOL" - THIS SIGN SHOULD BE PLACED AT A POINT IN ADVANCE OF THE DOWNGRADE WHERE THE LENGTH, PERCENT OF GRADE, HORIZONTAL CURVATURE, OR OTHER PHYSICAL FEATURES REQUIRE SPECIAL CONSIDERATION ON THE PART OF DRIVERS.✱

W8-1,W8-2 "BUMP"/"DIP" - THESE SIGNS ARE INTENDED FOR USE TO GIVE WARNING OF A SHARP RISE OR DEPRESSION IN THE PROFILE OF THE ROAD THAT IS SUFFICIENTLY ABRUPT TO AFFECT VEHICLE OPERATION OR CAUSE CONSIDERABLE DISCOMFORT TO PASSENGERS.✱

W8-3a "PAVEMENT ENDS SYMBOL" - THIS SIGN IS INTENDED FOR USE IN ADVANCE OF A POINT WHERE THE PAVEMENT SURFACE CHANGES FROM A HARD-SURFACED PAVEMENT TO THE LOW-TYPE SURFACE OR EARTH ROAD.✱

W8-4 "SOFT SHOULDER" - THIS SIGN IS INTENDED FOR USE TO WARN OF A SOFT SHOULDER CONDITION THAT COULD PRESENT A PROBLEM TO VEHICLES THAT MAY GET OFF THE PAVEMENT.✱

W8-5 "SLIPPERY WHEN WET SYMBOL" - THIS SIGN SHOULD BE PLACED IN ADVANCE OF THE CONDITION WHERE THE HIGHWAY SURFACE IS SLIPPERY BEYOND WHAT IS ORDINARY WHEN WET.✱

W8-9a "SHOULDER DROP-OFF" - THIS SIGN IS INTENDED FOR USE IN ADVANCE OF A SHOULDER DROP-OFF THAT EXCEEDS THREE INCHES IN HEIGHT.✱

W8-11 "UNEVEN LANES" - THIS SIGN IS INTENDED FOR USE IN ADVANCE OF AN UNEVEN ADJACENT LANE SITUATION THAT EXCEEDS ONE INCH IN HEIGHT.✱

W9-1( ) "LEFT (RIGHT) LANE ENDS" - THIS SIGN IS INTENDED FOR USE IN ADVANCE OF THE PAVEMENT WIDTH TRANSITION SIGN (W4-2).

W9-2( ) "LANE ENDS/MERGE LEFT (RIGHT)" - THIS SIGN IS INTENDED FOR USE AS A SUPPLEMENT TO THE PAVEMENT WIDTH TRANSITION SIGN (W4-2).

W9-3 OR W9-3a( ) "CENTER LANE CLOSED AHEAD" - THIS SIGN SHOULD BE USED IN ADVANCE OF THE POINT WHERE WORK OCCUPIES THE CENTER LANE AND TRAFFIC IS DIRECTED TO THE RIGHT OR LEFT OF THE WORK ZONE.✱

W12-1 "DOUBLE ARROW SYMBOL" - THIS SIGN SHOULD BE PLACED AT THE POINT OF THE OBSTRUCTION IN THE ROADWAY, WHERE TRAFFIC IS PERMITTED TO PASS ON EITHER SIDE OF THE OBSTRUCTION.

W12-2 "LOW CLEARANCE SYMBOL" - THIS SIGN IS INTENDED FOR USE IN ADVANCE OF AN OBSTRUCTION TO WARN VEHICLE OPERATORS OF CLEARANCES LESS THAN THE MAXIMUM VEHICLE HEIGHT PERMITTED PLUS 12 INCHES.✱

W13-1P( ) "ADVISORY SPEED PLAQUE" - THIS PLAQUE IS INTENDED TO SUPPLEMENT WARNING SIGNS ONLY AND SHALL NOT BE MOUNTED ALONE. IT IS USED TO INDICATE THE MAXIMUM RECOMMENDED SPEED FOR THE INDICATED CONDITION.

W13-3 "ADVISORY RAMP SPEED" - THIS SIGN IS TO BE POSTED TO INFORM MOTORISTS WHAT THE SUGGESTED SPEED LIMIT IS ON A RAMP.

W20-1 "ROAD/WORK/AHEAD" - THIS SIGN IS TO BE LOCATED IN ADVANCE OF THE INITIAL ACTIVITY OR DETOUR A DRIVER MAY ENCOUNTER, AND IS INTENDED TO BE USED AS A WARNING OF OBSTRUCTIONS OR RESTRICTIONS.

W20-2 "DETOUR/(DIST.)" - THIS SIGN IS INTENDED FOR USE IN ADVANCE OF THE POINT AT WHICH TRAFFIC IS DIVERTED OVER A TEMPORARY ROADWAY OR ROUTE.

W20-3 "ROAD/CLOSED/(DIST.)" - THIS SIGN IS INTENDED FOR USE IN ADVANCE OF A POINT AT WHICH A ROADWAY IS CLOSED TO ALL TRAFFIC OR TO ALL BUT LOCAL TRAFFIC.

W20-4 "ONE LANE/ROAD/(DIST.)" - THIS SIGN IS INTENDED FOR USE IN ADVANCE OF A POINT WHERE TRAFFIC IN BOTH DIRECTIONS MUST USE A SINGLE LANE.

W20-5( ) "XXX LANE/CLOSED/(DIST.)" - THIS SIGN IS INTENDED FOR USE IN ADVANCE OF A POINT WHERE ONE LANE OF A MULTIPLE-LANE ROADWAY IS CLOSED. IT SHOULD BE PROVIDED WITH INTERCHANGEABLE PLAQUES READING "RIGHT", "LEFT", AND "CENTER" AT NO ADDITIONAL COST TO THE PROJECT.

W20-7 "FLAGGER SYMBOL" - THIS SIGN IS INTENDED FOR USE IN ADVANCE OF ANY POINT AT WHICH A FLAGGER HAS BEEN STATIONED TO CONTROL TRAFFIC THROUGH OR AROUND THE PROJECT.✱

W20-52 "GROOVED/PAVEMENT/AHEAD" - THIS SIGN IS INTENDED TO BE USED IN ADVANCE OF A ROADWAY THAT HAS BEEN GROOVED AND/OR ROTO MILLED.

W21-1a "WORKER SYMBOL" - THIS SIGN IS INTENDED FOR USE IN CONJUNCTION WITH MINOR MAINTENANCE AND PUBLIC UTILITY OPERATIONS FOR THE PROTECTION OF MEN WORKING IN OR NEAR THE ROADWAY.

W21-2 "FRESH/OIL" - THIS SIGN IS INTENDED FOR USE WHERE RE-SURFACING OPERATIONS HAVE RENDERED THE SURFACE OF THE PAVEMENT TEMPORARILY WET, AND OBJECTIONABLE SPLASHING ON VEHICLES MAY OCCUR.✱

W21-3 "ROAD/MACHINERY/AHEAD" - THIS SIGN IS INTENDED FOR USE IN ADVANCE OF THE AREAS WHERE HEAVY EQUIPMENT IS OPERATING IN OR ADJACENT TO THE ROADWAY.✱

W21-4 "ROAD/WORK/(DIST.)" - THIS SIGN IS INTENDED FOR USE IN ADVANCE OF MAINTENANCE FOR MINOR RECONSTRUCTION OPERATIONS IN THE ROADWAY.

W21-5 "SHOULDER/WORK" - THIS SIGN IS INTENDED FOR USE IN ADVANCE OF THE PROJECT INVOLVING THE SHOULDER, WHERE THE TRAVELED WAY REMAINS UNOBSTRUCTED.

W21-6 "SURVEY/CREW" - THIS SIGN IS INTENDED FOR USE IN ADVANCE OF A POINT WHERE A SURVEYING CREW IS WORKING IN OR ADJACENT TO THE ROADWAY.✱

W22-1 "BLASTING/ZONE/(DIST.)" - THIS SIGN IS INTENDED FOR USE IN ADVANCE OF ANY POINT OR WORK SITE WHERE THERE ARE EXPLOSIVES BEING USED. THE W22-2 AND W22-3 SIGNS MUST BE USED IN SEQUENCE WITH THIS SIGN.

W22-2 "TURN OFF/2-WAY RADIOS/AND/CELLULAR/PHONES" - THIS SIGN IS TO BE USED IN SEQUENCE WITH THE W22-1 AND W22-3 SIGNS AND PLACED AT LEAST 1000 FEET FROM THE BEGINNING OF THE BLASTING ZONE.

W22-3 "END/BLASTING/ZONE" - THIS SIGN IS TO BE USED TO DENOTE THE END OF THE RADIO INFLUENCE AREA AND SHALL BE PLACED A MINIMUM OF 1000 FEET FROM THE BLASTING ZONE, EITHER WITH OR PRECEDING THE END CONSTRUCTION SIGN.

W22-50(X) "ROCK SCALING X MILE(S)" - THIS SIGN IS INTENDED TO BE USED IN ADVANCE OF A FLAGGER IN ADVANCED OF THE WORK ZONE AREA.

ADVANCE PLACEMENT OF WARNING SIGNS

POSTED OR 85TH PERCENTILE SPEED	ADVANCE PLACEMENT DISTANCE (FEET)								
	+ CONDITION A	++ CONDITION B: DECLARATION TO THE LISTED ADVISORY SPEED (MPH) FOR THE CONDITION							
		MPH							
		0	10	20	30	40	50	60	70
20	225	●	●	--	--	--	--	--	--
25	325	●	●	●	--	--	--	--	--
30	450	●	●	●	--	--	--	--	--
35	550	●	●	●	●	--	--	--	--
40	650	125	●	●	●	--	--	--	--
45	750	175	125	●	●	●	--	--	--
50	850	250	200	150	100	●	--	--	--
55	950	325	275	225	175	100	●	--	--
60	1100	400	350	300	250	175	●	--	--
65	1200	475	425	400	350	275	175	●	--
70	1250	550	525	500	425	350	250	150	--
75	1350	650	625	600	525	450	350	250	100

+ CONDITION A: SPEED REDUCTION AND LANE CHANGING IN HEAVY TRAFFIC. TYPICAL SIGNS ARE "MERGE" AND "RIGHT LANE ENDS".

++ CONDITION B: TYPICAL CONDITIONS ARE THE WARNING OF A POTENTIAL STOP SITUATION AND LOCATIONS WHERE THE ROAD USER MUST DECREASE SPEED TO MANEUVER THROUGH THE WARNED CONDITION. TYPICAL SIGNS ARE "STOP AHEAD", "SIGNAL AHEAD", "YIELD AHEAD", "CURVE", "REVERSE CURVE", "TURN".

● NO SUGGESTED DISTANCES ARE PROVIDED AT THESE SPEEDS, AS THE PLACEMENT IS DEPENDENT ON SITE CONDITIONS AND OTHER SIGNING.

A SUPPLEMENTAL PLAQUE MAY BE USED WITH WARNING SIGNS SPECIFYING THE DISTANCE TO THE CONDITION IF THERE IS AN IN-BETWEEN INTERSECTION THAT MIGHT CONFUSE THE MOTORIST.

✱ PLACEMENT SHOULD BE IN ACCORDANCE WITH WARNING SIGN PLACEMENT TABLE.

Computer File Information	
Creation Date: 07/04/12	Initials: KEN
Last Modification Date: 12/8/14	Initials: KEN
Full Path: www.coloradodot.info/library/traffic/traffic-s-standard-plans	
Drawing File Name: S-630-01_24of24.dgn	
CAD Ver.: MicroStation V8 Scale: Not to Scale	Units: English

	Sheet Revisions	
	Date:	Comments
R-4	07/26/13	CHANGE W20-7a SIGN CODE TO W20-7
R-7	12/8/14	FORMERLY SHEET 20.
R-X		
R-X		

Colorado Department of Transportation
4201 East Arkansas Avenue
Denver, Colorado 80222
Phone: (303) 757-9543
Fax: (303) 757-9219
Safety & Traffic Engineering Branch KCM/KEN

TRAFFIC CONTROLS FOR HIGHWAY CONSTRUCTION

Issued By: Safety & Traffic Engineering Branch July 4, 2012

STANDARD PLAN NO.
S-630-1
Sheet No. 24 of 24