ROADWAY DESIGN CRITERIA AND STANDARDS

July 2016

TOWN OF SUPERIOR
124 E. Coal Creek Drive
Superior, Colorado 80027
(303) 499-3675

TABLE OF CONTENTS

Chapter	Title	Page
1	Roadway Design and Technical Criteria	1.1
2	Access Requirements and Criteria	2.1
3	Pavement Design and Technical Criteria	3.1
4	Technical Specifications	4.1
Appendix	Roadway Standards	

CHAPTER 1

ROADWAY DESIGN AND TECHNICAL CRITERIA

TABLE OF CONTENTS

Section	Title	Page
1.1	General	1.1
1.2	Roadway Design and Technical Criteria	1.1
1.3	Sidewalks, Bicycle Lanes, Curbs, Gutters, and Driveways	1.21
1.4	Drainage	1.23
1.5	Horizontal Alignment	1.25
1.6	Vertical Alignment	1.29
1.7	Intersections	1.32
1.8	Curb Return Profiles	1.33
1.9	Connection with Existing Roadways	1.34
1.10	Off-Site Design	1.35
1.11	Acceleration/Deceleration Lanes	1.35
1.12	Bus Pullout Lanes	1.35
1.13	Construction Traffic Control	1.36
1.14	Median Islands	1.38
1.15	Signage and Striping Criteria	1.38
1.16	Fire Lanes	1.42
1.17	Required Right-of-Way Designation	1.42
1.18	Bridges	1.43
1.19	Traffic Calming	1.43

TOWN OF SUPERIOR

CHAPTER 1
ROADWAY DESIGN AND TECHNICAL CRITERIA

1.1 GENERAL

This section sets forth the minimum design and technical criteria and specifications to be used in the preparation of all roadway plans.

1.1.1 Within this chapter on Roadway Design and Technical Criteria, the AASHTO "Green Book" refers to ***"A Policy on Geometric Design of Highways and Streets"***, the most recent edition as published by the American Association of State Highway and Transportation Officials.

1.2 ROADWAY DESIGN AND TECHNICAL CRITERIA

The Town has adopted a Transportation Plan based on traffic volumes, land use and expected growth. This Functional Street Classification Plan designates streets as private, alleys, local, collector (major and minor), arterial (major and minor), commercial and office (See Tables 1.1 and 1.2). The following criteria apply to each classification. Standard roadway cross sections along with other related drawings and details are presented in the Appendix.

1.2.1 Planning Principles for Local Circulation Systems

Basic considerations in the design of local circulation systems must recognize the following factors:

Safety: for both vehicular and pedestrian traffic.
Efficiency of Service: for all users.
Livability: especially as affected by traffic elements in the circulation system.
Economy: of both construction and use of land.

Each of the following principles is an elaboration on one or more of these four factors. The principles are not intended as absolute criteria, since instances may appear where certain principles conflict. Therefore, the principles should be used as guides to proper systems layout.

a. Ensure Vehicular and Pedestrian Access

The primary function of local streets is to serve abutting properties. Street widths, placement of sidewalks, patterns of streets and number of intersections are related to safe and efficient access to abutting lands.

b. Minimize Through Trips

Through traffic on local and collector streets increases the average speed and volume and thus the accident potential, thereby reducing residential amenities. Through traffic can be discouraged by creating a circuitous route between neighborhoods and higher volume streets and by channelizing or controlling median crossings along peripheral routes.

c. Control Access to Arterials

Local circulation systems and land development patterns should not detract from the efficiency of peripheral arterial facilities. Ideally, land development should occur so that no local streets require direct access to arterial routes. The number of access points between the local circulation system and the arterial system should be minimized. Intersections along arterial routes should be properly spaced for efficient signalization and traffic flow. The streets that do intersect the arterial system will tend to have high volumes since they are the only exit points.

d. Discourage Speeding

Residential streets should be designed to discourage fast movement (more than 25 m.p.h.), through the use of curvilinear alignments and circuitous routes in the street system.

e. Minimize Pedestrian – Vehicular Conflicts

Pedestrian travel from within the area to points outside should require a minimum of street crossings. Sometimes this may be achieved through proper design of street patterns, land use arrangements and pedestrian routes. Typical methods include use of cul-de-sacs and loop streets, special pedestrian routes or walkways and the proper placement of high pedestrian traffic generators. In general, while vehicular flow must be outward-oriented to the peripheral arterials, pedestrian travel should be inward-oriented to avoid these heavier vehicular flows.

f. Minimize Space Devoted to Street Use

It is desirable to minimize local street mileage to reduce construction and maintenance costs as well as to permit the most economic land use. Street should also have an appearance commensurate with their function. They should be in keeping with the residential character.

g. Relate Street to Topography

Local streets will be more attractive and economical, if they are constructed to closely adhere to topography. The important role that streets play in the overall storm drainage system can be enhanced by using the topography of the area.

h. General Roadway Layout Criteria

1. The arrangements of streets should permit economical and practical patterns, shapes and sizes of development parcels. Streets as a function of land use must not unduly hinder the development of land. Distances between streets, number of streets, and related elements all have a bearing on efficient subdivision of an area. Access to adjoining properties should also be encouraged.

2. Where a development or subdivision abuts or contains an existing or proposed arterial street or highway, the Planning Commission may require adequate protection of the adjoining lots and/or require separation of through and local traffic. Such adequate protection may include service streets, reverse frontage lots with screen planting in a reservation strip along the rear property line, deep lots with rear service alleys abutting the primary street or highway, or such other treatment as may be necessary as determined by the Planning Commission.

3. Where a development or subdivision borders on or contains a railroad right-of-way or limited access highway right-of-way, the Planning Commission may require a street approximately parallel to and on each side of such right-of-way, at a distance suitable for appropriate use of the intervening land. Such land would be appropriately used for park purposes in residential districts, or for commercial or industrial purposes in nonresidential districts. Such distances shall be determined with due regard for the requirements of approach grades and future grade separations.

4. Local streets shall be laid out to discourage through traffic.

5. All permanent dead-end streets, as opposed to temporary dead-end streets, shall be developed as cul-de-sacs in accordance with the standards as set forth herein. Except where no other practical alternative is available, such streets may not extend more than six hundred (600) feet.

6. The minimum radius of the turnaround portion for a residential cul-de-sac, as measured to the flowline, shall be 40 feet, for all cul-de-sacs, regardless of lot size or cul-de-sac length. The minimum right-of-way shall be a 50-foot radius. Cul-de-sac bulbs shall be built with 4-inch mountable curb and gutter, with 5-foot wide attached sidewalk (See Standard Drawings). Commercial and Office development cul-de-sacs shall have minimum flowline radius of 45-feet and right-of-way radius of 60-feet and shall be constructed with 6-inch curb and gutter with detached sidewalk (See Standard Drawings).

7. Half streets (i.e. streets of less than full required right-of-way and pavement width) shall not be permitted, except where such streets, when combined with a similar street (developed previously or simultaneously) on property adjacent to the subdivision, creates or comprises a street that meets the right-of-way and pavement requirements as set forth herein.

8. Emergency vehicle access (EVA) may be required for portions of developments having only a single access.

i. <u>Landscaping in Areas Between Curb and Sidewalk</u>

The type of vegetation and landscaping to be planted within the area between the curb and sidewalk shall meet the minimum landscape standards of the *Superior Land Use Code* and shall depend on those particular utilities to be located underground in such areas. In general, planting of shallow rooted vegetation shall be encouraged to reduce adverse interaction between landscaping and any underground utilities and in the event that utilities must be repaired. The Town will maintain ultimate responsibility for maintenance of the area if located in the Public right-of-way. However, it would be expected that the individual property owners and/or Homeowner's Associations would carry out the standard day to day maintenance of these areas including mowing, trimming and weed removal, for example, where appropriate.

TABLE 1.1 - ROADWAY CLASSIFICATIONS & REQUIREMENTS

(Refer to the Appendix for street sections)

Roadway Classification[1]	R.O.W. Width (feet)[2]	FL-FL Width	Travel Lanes	Recommended Median Width (feet) [3]	Posted Speed (MPH)	Parking
Alleys	16[7]	12	1	---	---	----
Private	---	24	2	---	25	On-Street
Local	60[6]	34[5]	2	---	25	On-Street
Commercial/ Office	60[6]	36[5]	2	---	25-35	Optional
Minor Collector	60	36	2	---	30	No On-Street
Major Collector						
W/o median	90	62	4	---	35	No On-Street
With median	100	74[4]	4	12 [4]	35	No On-Street
Minor Arterial	110	80	4	16	35 – 45	No On-Street
Major Arterial						
(4 – Lane)	120	80	4	16	45-50	No On-Street
(6-Lane)	130	104	6	16	45-50	No On-Street

Notes:

1. Final determination to be based on the projected traffic volumes in Table 1.2.
2. Easements for pedestrian walkways are included herein. Additional easements may be required per the utility entities (i.e., Xcel Energy, Qwest, etc.)
3. Medians in roadways are subject to final approval of the Town Engineer.
4. Median optional, subject to Town approval. (Refer to typical sections in the Appendix).
5. Residential cul-de-sac flowline radius shall be a minimum of 40 feet. Commercial and Office cul-de-sac flowline radius shall be a minimum of 45 feet.
6. Residential cul-de-sac ROW radius shall be a minimum of 50-feet. Commercial and Office cul-de-sac radius shall be 60 feet.
7. R.O.W. may be required to be wider depending on utility requirements.

TABLE 1.2
ROADWAY CLASSIFICATION VERSUS VOLUME

Roadway Classification	Lanes	Average Daily Traffic
Local	2	Less than 2,000 VPD
Commercial/Office	2	Less than 8,000 VPD[1]
Minor Collector	2	2,000 – 8,000 VPD
Major Collector	4 Divided and Undivided	8,000 – 18,000 VPD
Minor Arterial	4 Divided	12,000 – 20,000 VPD
Major Arterial	4-6 Divided	20,000 – 40,000

Notes:

1. For Commercial/Office Streets with greater than 8,000 VPD, requirements for Major Collector Streets shall be used, subject to the Town Engineer's approval.

1.2.2 Roadway Classifications

1.2.2.1 Alleys

a. **Posted Speed Limit:** Speed Limit generally not posted. Design speed of 15 mph to be used for design purposes.

b. **Traffic Volumes:** Not Applicable, used only for dwelling access

c. **Continuity:** Limited continuity. Length to be determined on a site by site basis. Alleys may intersect with local and minor collector streets. Intersecting alleys and alleys with turns are only allowed with the Town Engineer's approval. Setbacks for rear yard garage structures shall be a minimum of 8-feet from the property line.

d. **Safety:** Not Applicable

e. **Traffic Control:** Stop signs, yield signs, or right-of-way rules for uncontrolled intersections.

f. **Function:** Alleys provide direct access to adjacent property. Utility line easements should be available.

g. **Right-of-Way/Easement:** 16-feet minimum right-of-way or easement required. Greater width may be necessary depending upon utility requirements and availability of turnouts. Any changes in right-of-way or easement width due to a change in street classification shall be made at intersections only. An appropriate radius of the right-of-way or easement will be provided at all intersections to ensure the sight distance triangle falls within the public right-of-way or easement.

h. **Number of Moving Lanes:** One.

i. **Access Conditions:** Intersections at grade with direct access to abutting property permitted.

j. **Planning Characteristics:** Alleys should be designed to discourage through traffic from moving through the neighborhood. Alleys may intersect with local and minor collector streets, but are not permitted to intersect with major collectors or arterial streets.

k. **Type of Curb and Gutter:** Concrete valley gutter required in center of alley for drainage (Refer to Standard Drawings).

l. **Cul-De-Sacs/Knuckles/Bubbles:** Not applicable.

m. **Sidewalk Width:** Not applicable.

n. **Street Width:** 12-feet paved width (edge to edge pavement dimension) with concrete valley gutter along center of the alley.

o. **Minimum Centerline Radius of Curvature (Horizontal):** See Table 1.3.

p. **Minimum Length of Vertical Curves:** See Table 1.6.

q. **Minimum Tangent Lengths:** 50 feet.

r. **Street Grades:** A minimum longitudinal grade of 1.0-percent shall be required on all alleys. Maximum grade 8.0-percent (See Table 1.6). Also, see Section 1.4, Drainage. In certain cases, grades less than 1.0-percent may be permitted with the Town Engineer's approval.

s. **Curb Return Radii:** See Table 1.4.

1.2.2.2 Private

a. **Posted Speed Limit: 25mph:** Speed Limit generally not posted. Design speed of 25 mph to be used for design purposes.

b. **Traffic Volumes:** Traffic volumes limited to access vehicles only.

c. **Continuity:** Limited continuity

d. **Safety:** Designed for the safety of pedestrians and bicyclists, and the ease of access to adjacent parcels of land. Private Streets are typically used by single users and no through traffic or parking is allowed.

e. **Traffic Control:** Stop signs, yield signs, or right-of-way rules for uncontrolled intersections.

f. **Function:** Private Streets provide direct access to adjacent property. No through traffic is allowed. Utility line easements should be available.

g. **Right-of-Way:** Not Applicable.

h. **Number of Moving Lanes:** Two.

i. **Access Conditions:** Intersections at grade with direct access to abutting property permitted.

j. **Planning Characteristics:** Private Streets should be designed to discourage through traffic from moving through the neighborhood. Private Streets should not intersect minor collectors, major collectors or arterial streets.

k. **Type of Curb and Gutter:** 6-inch curb gutter (optional depending on the application).

l. **Cul-De-Sacs/Knuckles/Bubbles:** Not applicable.

m. **Sidewalk Width:** 5-foot wide detached sidewalk with a 4-foot grassed area between back of walk and face of curb (optional depending upon applications)

n. **Street Width:** Minimum 20-feet paved width plus 2-2 foot gutters, 24 feet flow-line to flowline depending on the development.

o. **Minimum Centerline Radius of Curvature (Horizontal):** See Table 1.3.

p. **Minimum Length of Vertical Curves:** See Table 1.6.

q. **Minimum Tangent Lengths:** 50 feet.

r. **Street Grades:** A minimum longitudinal grade of 1.0-percent shall be required. Maximum grade 8.0-percent (See Table 1.6). Also, see Section 1.4, Drainage. In certain cases, grades less than 1.0-percent may be permitted with the Town Engineer's approval.

s. **Curb Return Radii:** See Table 1.4.

1.2.2.3 Local

a. **Posted Speed Limit: 25 mph:** Posted or prima facie speeds for local street classifications shall be the same as the design speed of that street.

b. **Traffic Volumes**: Less than 2,000 vehicles per day.

c. **Continuity**: Limited continuity

d. **Safety**: Designed for the safety of pedestrians and bicyclists, and the ease of access to adjacent parcels of land. On-street parking is permitted.

e. **Traffic Control**: Stop signs, yield signs, or right-of-way rules for uncontrolled intersections.

f. **Function**: Local streets provide direct access to adjacent property. Traffic carried by local streets should have an origin or a destination within the neighborhood. Utility line easements should be available.

g. **Right-of-Way**: 60 feet minimum right-of way required. Any change in R.O.W. width due to a change in street classification shall be made at intersections only. An appropriate radius of the R.O.W. will be provided at all intersections to ensure the sight distance triangle falls within the public R.O.W. A sight distance triangle will also be acceptable for the same purpose, (with the shorter dimension lying parallel to the centerline of the minor street). The minimum R.O.W. radius in a cul-de-sac, knuckle or bubble shall be fifty (50) feet.

h. **Number of Moving Lanes**: Two.

i. **Access Conditions:** Intersections at grade with direct access to abutting property permitted.

j. **Planning Characteristics**: Local streets should be designed to discourage through traffic from moving through the neighborhood. Local streets should not intersect major collectors or arterial streets.

k. **Type of Curb and Gutter**: All local streets with the exception of cul-de-sac bulbs shall have 6-inch vertical-curb and gutter with 5-foot detached sidewalk. Cul-de-sac bulbs shall be constructed with 4-inch mountable curb and gutter with 5-foot wide attached sidewalk (See Standard Drawings).

l. **Cul-De-Sacs/Knuckles/Bubbles**: Cul-de-sacs, Knuckles and Bubbles, shall all have a minimum flowline radius of forty-five (40) feet and minimum right-of-way radius of fifty (50) feet (See Standard Drawings in the Appendix). Cul-de-sacs may have a maximum length of 600 feet or a maximum of 40 dwelling units (if

approved by the Fire District), whichever is most restrictive. Cul-de-sacs longer than 600 feet, or with more than 25 dwelling units, may require all units to be sprinkled per NFPA-13D.

m. **Sidewalk Width**: 5-foot wide sidewalk detached a minimum distance of 8 feet from the face of curb.

n. **Street Width**: 30-feet paved width plus 2-2 foot gutter pans. (34 feet flowline to flowline). Cul-de-sacs shall have a minimum flowline radius of 40-feet.

o. **Minimum Centerline Radius of Curvature (Horizontal)**: See Table 1.3

p. **Minimum Length of Vertical Curves**: See Table 1.6

q. **Minimum Tangent Lengths**: 50 feet.

r. **Street Grades:** A minimum longitudinal flowline grade of 1.0-percent shall be required on all Local streets; except at curb returns, knuckles, and bubbles where the minimum flowline grade shall be 2.0 percent. Maximum grade 8.0-percent (See Table 1.6). Also, see Section 1.4, Drainage. In certain cases, grades less than 1.0-percent may be permitted with the Town Engineer's approval.

s. **Curb Return Radii**: See Table 1.4.

1.2.2.4 Commercial & Office

a. **Posted Speed Limit – 25-35 mph**: Posted or prima facie speeds for the various street classifications shall be 5 miles per hour less than the design speed of that street.

b. **Traffic Volumes**: Less than 8,000 vehicles per day. When volumes are projected to exceed 8,000 vehicles per day, streets shall be designed as Major Collector Streets and shall be subject to the Town Engineer's approval. Painted / raised and landscaped / patterned concrete medians may be required.

c. **Safety:** Designed for the safety of pedestrians and bicyclists, and the ease of access to adjacent parcels of land. On-street parking may be permitted subject to the Town Engineer's approval.

d. **Traffic Control**: Stop signs, yield signs, or right-of-way rules for uncontrolled intersections.

e. **Function**: Commercial and Office Streets provide direct access to adjacent commercial and office properties. Traffic carried by commercial and office streets generally would have an origin or a destination within the neighborhood. Utility line easements should be available.

f. **Right-Of-Way**: 60 feet. An appropriate radius for the R.O.W. will be provided at all intersections to ensure the sight distance triangle falls within the public R.O.W. and radii can accommodate appropriate, truck traffic in accordance with AASHTO turning templates. The minimum cul-de-sac, knuckle, and bubble R.O.W. radius shall be 60 feet.

g. **Number of Moving Lanes**: Two (2) moving lanes with left and right turn lanes as warranted.

h. **Access Conditions**: Intersections at grade with direct access to abutting properties permitted.

i. **Planning Characteristics:** Commercial/Office streets should be designed to accommodate commercial vehicles and their circulation. Streets should not intersect arterial streets. No on-street parking, backing or loading maneuvers shall be allowed in the street without approval of the Town Engineer.

j. **Type of Curb and Gutter**: 6-inch vertical curb & gutter with 5-foot detached walk, including cul-de-sac bulbs.

k. **Cul-De-Sacs/Knuckles/Bubbles**: Cul-de-sacs, Knuckles, and Bubbles shall have a minimum flowline radius of fifty (45) feet and a minimum R.O.W. radius of 60 feet (See Standard Drawings in Appendix) and shall be designed for appropriate truck traffic in accordance with AASHTO turning templates. Cul-de-sacs may have a maximum length of 600 feet. Cul-de-sacs longer than 600 feet will require Fire Department and Town approval and may require all units to be sprinkled per NFPA- I 3D.

l. **Sidewalk Width**: Minimum 5-foot width detached sidewalk, or wider, depending on pedestrian volumes Sidewalk shall be detached a minimum distance of 7-feet from the face of the curb.

m. **Street Widths**: 32 feet paved width plus 2-2 foot gutter pans (36 feet flowline to flowline). Twelve-foot wide left turn lanes may also be required as indicated by the traffic study or by other factors

at the direction of the Town Engineer. Painted or raised and landscaped or patterned concrete medians may be required at the Town Engineer's discretion

n. **Minimum Centerline Radius of Curvature (Horizontal)**: See Table 1.3

o. **Minimum Length of Vertical Curves**: See Table 1.6

p. **Minimum Length of Tangents Between Curves**: 100 feet.

q. **Street Grades**: A minimum longitudinal flowline grade of 1.0-percent shall be required on all streets except at curb returns, knuckles, and bubbles where the minimum flowline grade shall be 2.0 percent. Maximum grade 6.0-percent (See Table 1.6). Also, see Section 1.4, Drainage. In certain cases, grades less than 1.0-percent may be permitted at the approval of the Town Engineer.

r. **Curb Return Radii**: See Table 1.4.

1.2.2.5 Minor Collector

a. **Posted Speed Limit – 30 MPH**: Posted or prima facie speeds shall be the same as the design speed.

b. **Traffic Volumes**: Greater than 2,000 vehicles per day, and less than 8,000 vehicles per day.

c. **Continuity**: Continuous for 0.25 to 0.50 mile.

d. **Safety:** Designed to handle traffic volumes loading from and onto local, other collector, and arterial roadways. No back-out drives are permitted.

e. **Traffic Control**: Regulation of traffic accomplished through the use of stop signs and channelization. Traffic signals normally used only at intersections with major collectors and arterial streets.

f. **Function:** Collector streets collect and distribute traffic between arterial and local streets, and serve as main connectors within communities, linking one neighborhood with another. Traffic carried by collector streets generally has an origin or a destination within the community. No back-out drives are permitted. On-Street Parking is not permitted. Minor Collector Streets shall be provided with a 5-foot wide bike lane in both directions. Utility line easements should be available.

g. **Right-Of-Way**: 60-feet. An appropriate radius for the R.O.W. will be provided at all intersections to ensure the sight distance triangle falls within the public R.O.W.

h. **Number of Moving Lanes**: Two.

i. **Access Conditions**: Intersections at grade with no direct access to abutting property permitted unless no other access is reasonably available.

j. **Planning Characteristics:** Minor Collector streets should have continuity throughout a neighborhood but need not extend beyond the neighborhood.

k. **Type of Curb and Gutter**: 6-inch vertical curb & gutter.

l. **Sidewalk Width**: Sidewalk shall be 5 feet wide and detached a minimum of 7 feet from the face of the curb.

m. **Street Widths** 32 foot-paved width plus 2-2 foot gutter pans. (36 foot flowline - flowline) forming two 11-foot drive lanes plus two 5-foot bike lanes plus two 2-foot gutters. Additional lanes may be required at intersections.

n. **Minimum Centerline Radius of Curvature (Horizontal)**: See Table 1.3

o. **Minimum Length of Vertical Curves**: See Table 1.6

p. **Minimum Length of Tangents Between Curves**: 100 feet.

q. **Street Grades**: A minimum longitudinal grade of 1.0-percent shall be required along the centerline of all Collector and Arterial streets. Maximum grade 6.0-percent (See Table 1.6). Also, see Section 1.4, Drainage. In certain cases, grades less than 1.0-percent may be permitted with the approval of the Town Engineer

r. **Curb Return Radii**: See Table 1.4.

1.2.2.6 Major Collector

A major collector is a general term denoting a roadway with painted or raised median, designated or operating with the following characteristics:

a. **Posted Speed Limit –35 MPH**: Posted or prima facie speeds for the various street classifications shall be 5 miles per hour less than the design speed of that street.

b. **Traffic Volumes**: Generally greater than 8,000 vehicles per day and less than 18,000 vehicles per day.

c. **Continuity**: Continuous for 0.5 to 2.0 miles

d. **Safety**: Designed to handle traffic volumes loading from and onto local, other collector, and arterial roadways. No back-out drives are permitted.

e. **Traffic Control**

1. Regulation of traffic accomplished through the use of traffic signs, signals and channelization.
2. Parking is prohibited.
3. Traffic signals will normally be located only at intersections with streets of higher classification.

f. **Function**: Major collector streets permit relatively unimpeded traffic movement and are intended for use on those routes where four (4) moving lanes are required but where a larger classified street is not warranted. No back-out drives are permitted. On-Street Parking is prohibited. Bike Lanes are to be provided in each direction.

g. **Right-Of-Way**: 90-feet (minimum without median) 100-feet (with median). An appropriate radius for the R.O.W. will be provided at all intersections to ensure the sight distance triangle falls within the public R.O.W.

h. **Number of Moving Lanes**: Four moving lanes with painted or raised curb and gutter median, and left and right turn lanes, as required.

i. **Access Conditions**

1. Intersections-at grade.
2. Access from street of lower classification will be permitted but in all cases will be controlled by traffic control devices.
3. Direct access to abutting property is not permitted unless no other access is reasonably available.
4. Full movement intersections with other collector and arterial streets should be at least 600 feet apart.

j. **Planning Characteristics**

1. Major collector streets should be employed where traffic demands dictate.
2. Landscaping elements are encouraged (Trees, open space, etc.).

k. **Type of Curb and Gutter**: 6-inch vertical curb & gutter. 6-inch median curb and gutter as required.

l. **Sidewalk Width**: 5-feet wide detached. Sidewalk shall be detached a minimum of 7-feet from the face of the curb for either a Major Collector with median or without median (See Standard Drawings in Appendix)

m. **Street Widths**

1. Major Collector without Median Option: 4-12ft. paved lanes, two 5-foot bike lanes, with 2-2ft. gutter pans (62-feet flowline-flowline).
2. Major Collector with Median Option: 1-11ft. and 1-12ft. paved lane in each direction, two 5-ft. bike lanes with 2-2ft. gutter pans, 2-1ft. median gutters; 1-12ft. median/center turn lane (74ft. flowline - flowline)

n. **Minimum Centerline Radius of Curvature (Horizontal)**: See Table 1.3

o. **Minimum Length of Vertical Curves**: See Table 1.6

p. **Minimum Length of Tangents Between All Curves**: 100 feet.

q. **Street Grades**: A minimum longitudinal grade of 1.0-percent shall be required along the centerline of all Collector and Arterial streets. Maximum grade 6.0-percent. (See Table 1.6). Also, see Section 1.4, Drainage. In certain cases, grades less than 1.0-percent may be permitted with the Town Engineer's approval.

r. **Curb Return Radii**: See Table 1.4.

1.2.2.7 Minor Arterial

a. **Posted Speed Limit – 35-45 MPH**: Actual posted speed to be determined by the Town Engineer prior to submittal of construction plans. Posted or prima facie speeds shall be 10 miles per hour less than the design speed of that street.

b. **Traffic Volumes**: Generally greater than 12,000 vehicles per day and less than 20,000 vehicles per day.

c. **Continuity**: Continuous, 2.0 to 6.0 miles.

d. **Safety**: Designed to handle traffic volumes loading from and onto collector, and arterial roadways.

e. **Traffic Control**

1. Regulation of traffic accomplished through the use of traffic signs, signals and channelization.
2. Parking is prohibited.
3. Traffic signals will normally be required at major intersections.

f. **Function**: Arterial routes permit relatively unimpeded traffic movement and are intended for use on these routes where four moving lanes and one left-turn lane are required but where a major arterial cross section would not be warranted. Bike Lanes are to be provided in each direction.

g. **Right-Of-Way**: 110-feet (minimum). Additional R.O.W. may be required based on future transit needs as identified by the Town Engineer and/or the Planning Staff.

h. **Number of Moving Lanes**: Four (4) moving lanes.

i. **Access Conditions**

1. Intersections at grade.
2. Access from street of lower classification will be permitted, but in all cases will be controlled by traffic control devices.
3. Direct access to abutting property is not permitted unless no other access is reasonably available.

j. **Planning Characteristics**

1. Arterials should be spaced from one half (1/2) to one (1) mile apart and, where possible, should be continuous.
2. Arterials should act as boundaries between neighborhood areas.
3. Full movement intersection spacing shall be 1/4 mile.

k. **Type of Curb and Gutter**: 6-inch vertical curb & gutter with 6-inch vertical median curb and gutter.

l. **Sidewalk Width**: 5-feet wide detached. Sidewalk shall be detached a minimum distance of 9-feet back from the face of the curb.

m. **Street Widths**: 4-12ft. paved travel lanes (minimum); 1-16ft. raised median; 2-5ft. bike lanes, 2-2ft. gutter pans and 2-1ft. median gutter pans. (80ft. flowline-flowline). Left and right turn lanes; acceleration and deceleration lanes required at intersections, as necessary.

n. **Minimum Centerline Radius of Curvature (Horizontal)**: See Table 1.3

o. **Minimum Length of Vertical Curves**: See Table 1.6

p. **Minimum Length of Tangents Between All Curves**: 250 feet.

q. **Street Grades**: A minimum longitudinal grade of 1.0-percent shall be required along the centerline of all Collector and Arterial streets. Maximum grade 6.0-percent (See Table 1.6). Also, see Section 1.4, Drainage. In certain cases, grades less than 1.0-percent may be permitted with the Town Engineer's approval.

r. **Curb Return Radii**: See Table 1.4.

1.2.2.8 Major Arterial (4 Lane)

a. **Posted Speed Limit – 45-50 MPH**: Actual posted speed to be determined by the Town Engineer prior to submittal of construction plans. Posted or prima facie speeds for the various street classifications shall be 10 miles per hour less than the design speed of that street.

b. **Traffic Volumes**: Generally greater than 20,000 vehicles per day, and less than 40,000 vehicles per day.

c. **Continuity**: Continuous, generally connecting with regional routes.

d. **Safety**: Major arterial streets permit rapid and relatively unimpeded traffic movement throughout the Town, connecting major land use elements as well as communities with one another. Designed to handle traffic volumes loading from and onto collector, and arterial roadways.

e. **Traffic Control**

1. Regulation of traffic accomplished through the use of traffic signals and channelization.
2. Parking shall be prohibited.
3. Roadways should have a raised median strip between them.

f. **Function**: Major arterial routes permit rapid and relatively unimpeded traffic movement throughout the region, connecting major land use elements, as well as communities with one another. Bike Lanes in each direction shall be provided.

g. **Right-of-Way**: 120-foot ROW is the minimum requirement. Additional R.O.W. may be required based on future transit needs as identified by the Town Engineer and/or Planning Staff.

h. **Number of Moving Lanes**: Four (4) moving lanes

i. **Access Conditions**

1. Intersections at grade.
2. Full movement intersections will normally be located at 1/4 mile intervals.
3. Access from collector and arterial streets shall be controlled by traffic control devices.
4. Normally, direct access to abutting property is not permitted.
5. Abutting properties should not face onto the roadway unless separated from it by a frontage road.

j. **Planning Characteristics**: Major arterials should be spaced approximately one (1) mile apart and should traverse an entire region. Major arterial streets should not bisect neighborhoods, but should act as boundaries between them.

k. **Type of Curb and Gutter**: 6-inch vertical curb & gutter with 6-inch vertical median curb and gutter.

l. **Sidewalk Width**: 5feet-wide detached. A minimum distance of 9 feet from the face of the curb to the nearest edge of the sidewalk is required.

m. **Street Widths**: 4-12ft. travel lanes (minimum); 1-16ft. median, raised median with 2-1ft. median gutters and 2-2ft. gutter pans. Right turn lanes and left-turn-lanes, acceleration and deceleration lanes required at intersections (80ft. flowline-flowline, minimum).

n. **Minimum Centerline Radius of Curvature (Horizontal)**: See Table 1.3

o. **Minimum Length of Vertical Curves**: See Table 1.6

p. **Minimum Length of Tangents Between All Curves**: 300 feet.

q. **Street Grades**: A minimum longitudinal grade of 1.0-percent shall be required along the centerline of all Collector and Arterial streets. Maximum grade 6.0-percent. See Table 1.6. Also, see Section 1.4, Drainage. In certain cases, grades less than 1.0-percent may be permitted with the Town Engineer's approval.

r. **Curb Return Radii**: See Table 1.4.

1.2.2.9 Major Arterial (6 Lane)

a. **Posted Speed Limit – 45-50 MPH**: Actual posted speed to be determined by the Town Engineer prior to submittal of construction plans. Posted or prima facie speeds for the various street classifications shall be 10 miles per hour less than the design speed of that street.

b. **Traffic Volumes**: Generally greater than 40,000 vehicles per day.

c. **Continuity**: Continuous, generally connecting with regional routes.

d. **Safety**: Major arterial streets permit rapid and relatively unimpeded traffic movement throughout the region, connecting major land use elements as well as communities with one another. Designed to handle traffic volumes loading from and onto collector, and arterial roadways.

e. **Traffic Control**

1. Regulation of traffic accomplished through the use of traffic signals and channelization.
2. Parking shall be prohibited.
3. Roadways should have a raised median with curb and gutter between them.

f. **Function**: Major arterial routes permit rapid and relatively unimpeded traffic movement throughout the region, connecting major land use elements, as well as communities with one another. Bike Lanes shall be provided in each direction.

g. **Right-Of-Way**: 130-feet (minimum). Additional R.O.W. may be required based on future transit needs as identified by the Town Engineer and/or the Planning Staff.

h. **Number of Moving Lanes**: Six (6) moving lanes

i. **Access Conditions**

1. Intersections will generally be at grade.
2. Full movement intersections will normally be located at 1/4-mile intervals.
3. Access from collector and arterial streets shall be controlled by traffic control devices.
4. Normally, direct access to abutting property is not permitted.
5. Abutting properties should not face on the roadway unless separated from it by a frontage road.

j. **Planning Characteristics**: Major arterials should be spaced approximately one (1) mile apart and should traverse an entire city and/or county. Major arterial streets should not bisect neighborhoods but should act as boundaries between them.

k. **Type of Curb and Gutter**: 6-inch vertical curb & gutter with 6-inch vertical median curb and gutter.

l. **Sidewalk Width**: 5 feet wide detached. The nearest edge of the detached walk shall be a minimum of 9 feet from the face of the curb.

m. **Street Widths** 6-12ft. travel lanes (minimum); 1-16ft. raised median 2-2ft. gutter pans; 2-1ft. median gutters; plus necessary turn lanes, acceleration/deceleration lanes (104ft. flowline-flowline minimum).

n. **Minimum Centerline Radius of Curvature (Horizontal)**: See Table 1.3.

o. **Minimum Length of Vertical Curves**: See Table 1.6.

p. **Minimum Length of Tangents Between All Curves**: 300 feet.

q. **Street Grades**: A minimum longitudinal grade of 1.0-percent shall be required along the centerline of all Collector and Arterial streets. Maximum grade 6.0-percent (See Table 1.6). Also, see Section 1.4, Drainage. In certain cases, grades less than 1.0-percent may be permitted with the Town Engineer's approval.

r. <u>Curb Return Radii</u>: Table 1.4.

1.2.3 Location of Utilities

Water, storm drain, and sanitary sewer utilities shall be located within the streets in accordance with the dimensions, locations and details as set forth in the Standard Drawings in the Appendix. It is important to make every effort to try to meet these requirements to maintain consistency in placement and location of all utilities within the Town of Superior.

1.3 SIDEWALKS, BICYCLE LANES, CURBS, GUTTERS, AND DRIVEWAYS

1.3.1 Roadway typical sections shall be as specified by these Roadway Standards and the *AASHTO Guide for the Development of Bicycle Facilities*, Latest Edition.

1.3.2 The sidewalks required by this section shall be constructed in accordance with the Town's Specifications, except that the Town may permit the installation of walkways constructed with other suitable materials when it has been concluded that:

1. Such sidewalks would serve the residents of the development as adequately as concrete sidewalks; and

2. Such walkways would be more environmentally desirable or more in keeping with the overall design of the development

1.3.3 Whenever the Town finds that a means of pedestrian access is necessary from the subdivision to schools, parks, playgrounds or other roads or facilities, and that such access is not conveniently provided by sidewalks adjacent to the streets, the developer may be required to reserve an unobstructed easement of at least thirty (30) feet in width to provide access.

1.3.4 All public sidewalks shall be constructed to a minimum thickness of six (6) inches from four thousand (4,000) psi concrete. Private sidewalks may be constructed to a minimum thickness of four (4) inches. This does not apply to sidewalks that are to become the property of an HOA, in which case public standards shall apply.

1.3.5 Sidewalks or bicycle paths shall be constructed on both sides of all roadways as directed by the Town Engineer and in accordance with the *Town of Superior Comprehensive Plan*.

1.3.6 Where "on-street" bicycle lanes are shown on the *Town of Superior Comprehensive Plan* an additional five (5) feet of street width and right-of-way shall be added in addition to the requirements of these Sections, to accommodate the bicycle lane.

1.3.7 Off-Street bikeways shall have right-of-way reserved and dedicated in accordance with Section 1.3.3.

1.3.8 All sidewalks shall have a minimum width of five (5) feet for local, commercial, collector and arterial streets.

1.3.9 Vertical curb, gutter and detached walk shall be used on all roadways.

1.3.10 State law requires that handicap ramps be installed at all intersections and at certain mid-block locations, for all new construction or reconstruction of curb and sidewalk (CRS 43-2-107[2]). Handicap ramps shall be constructed in accordance with the Standard Drawings herein and if required in accordance with the Standard Details found in the *CDOT M-Standard Plans*. Handicap ramps shall be shown at all curb returns, and must be shown (located) at all "T" intersections directly opposite either curb return. Whenever referencing a handicap ramp, call out the specific ramp type and Standard Detail to be used to construct that ramp. On local streets only, mid-block handicap ramps should be constructed per the Standard Drawings and if required in accordance with the *CDOT M-Standard Plans*.

1.3.11 In general, all parking spaces serviced by the driveway will require radius returns.

1.3.12 Where curb cuts are allowed based on traffic considerations, concentrated storm water runoff must not be discharged across the sidewalk. These flows must be directed to a sidewalk chase section (See Section 1.4). If this is not possible due to grading restraints, radius returns and a crosspan must be used.

1.3.13 Curb cuts and driveways shall be constructed in accordance with the Standard Drawings in the Appendix of these Regulations.

1.3.14 On all Town major collectors and arterials, wherever desirable, underpass or overpass (grade separated) pedestrian crossings will be provided for regional/ neighborhood trails.

1.3.15 The provision of a bicycle circulation system must be considered in all developments. Walks or combination sidewalk/bicycle lanes, which serve both pedestrians and bicyclists, shall be at least ten (10) feet wide.

1.3.16 Pedestrian routes must occur along streets and extend into major accessible open space areas. Pedestrian and bicycle circulation within each parcel shall tie into the larger community systems.

1.3.17 Sidewalks may be eliminated along one or both sides of major streets if adequate provisions are made for alternative pedestrian circulation-ways.

1.3.18 Bicycle parking areas must be provided for all commercial, office and industrial developments. Bicycle parking areas should be located near building entries, but should not encroach into Pedestrian walkways.

1.4 DRAINAGE

The minor and major storm drainage systems are to be designed in accordance with the *Superior Municipal Code, Chapter 11, Stormwater Requirements*. Because safe and efficient conveyance of traffic is the primary function of roadways, the storm drainage function of the roadway, (such as allowable gutter capacity and street overtopping), will be designed to the limits set forth in the *Superior Municipal Code, Chapter 11, Stormwater Requirements*.

1.4.1 Curb Drains

Due to the occurrence of subgrade soils with moderate to high swell potential, throughout the Town, continuous perforated pipe drains shall be installed directly behind the curbs of all roadways constructed within the Town of Superior. The purpose of the pipe drains is to intercept seepage water that may otherwise seep into the pavement subgrade. All curb drain piping shall be constructed in accordance with the Standard Drawings as set forth in the Appendix. Curb drain pipes shall be outletted into the nearest stormwater manhole approximately every 500-feet of roadway length. All piping behind the curb shall be minimum 4-inch diameter Schedule 40, perforated PVC piping behind the curb and Schedule 40 non-perforated pipe within the roadway. The type of PVC pipe joints used will require written approval of the Town Engineer, prior to commencing with the pipe's installation.

1.4.2 Crosspans

Crosspans shall be constructed in accordance with the Standard Drawings in the Appendix of these Regulations. Crosspans are not permitted across entry streets, collector roadways, or arterial roadways but may occur parallel to these streets across a local street intersection.

If pavement is concrete, any drainage conveyance, such as crosspans, may be poured monolithically with the main line paving process.

On a case-by-case basis, if an excessive length of storm sewer must be constructed to comply with this requirement, causing undue financial hardship, a variance may be requested to use a 10-foot wide crosspan across a local street, an entry street, or a minor collector roadway. If there is storm sewer in the street, and within a reasonable distance, no crosspans shall be allowed.

No mid-block crosspans will be permitted within the Town of Superior, under any circumstances.

1.4.3 Inlets

Inlets shall be located to intercept the curb flow at the point curb flow capacity is exceeded by the storm runoff. Refer to *Superior Municipal Code, Chapter 11, Stormwater Requirements* for determining curb capacity. Inlets shall also be installed to intercept cross-pavement flows at points of transition in superelevation. Due to the presence of handicap ramps, inlets are not allowed in the curb return, but will be located at or behind the tangent points of the curb returns. Minimum inlet length for Type R inlets shall be five (5) feet.

1.4.4 Cross Slope

Except at intersections, or where superelevation is required, roadways shall be level from top of curb to top of curb (or flowline to flowline) and shall have a two (2) percent crown. At or within the "L" distance shown in Standard Drawing 1, the maximum elevation difference between flowlines is that dictated by the allowable intersection grade and the actual distance between flowlines.

1.4.4.1 Parabolic or curved crowns are not permitted. In no case shall the pavement cross slope at warped intersections exceed the grade of the through street.

1.4.4.2 The rate of change in pavement cross slope, when warping side streets at intersections, shall not exceed one (1) percent every twenty-five (25) feet horizontally on a local roadway, one (1) percent every thirty-seven and one-half (37.5) feet horizontally on a collector roadway, or one (1) percent every fifty-six and one-half (0.5) percent every 56.5 feet horizontally on arterial roadways (See *Section 1.7).*

1.4.5 Temporary Erosion Control

Temporary erosion control is required along and at the ends of all roadways that are not completed due to project phasing, subdivision boundaries, etc., in accordance with *Superior Municipal Code, Chapter 11, Stormwater Requirements* and standard practice for erosion control utilized throughout the Denver Region.

1.4.6 Sidewalk Chases

Storm water from concentrated points of discharge shall not be allowed to flow over sidewalks, but shall drain to the roadway by use of chase sections. Sidewalk chase sections shall not be located within the curb cut or driveway. Hydraulic design shall be in accordance with *Superior Municipal Code, Chapter 11,*

Stormwater Requirements. Sidewalk chases will only be allowed in special situations, on a case-by-case basis, as determined by the Town Engineer. Sidewalk chases, when permitted, are to be used to allow surface drainage to enter into the street gutter, rather than being used to avoid the use of a standard inlet.

All drainage structures shall be constructed in accordance with Details included in the Appendix.

1.5 HORIZONTAL ALIGNMENT

1.5.1 Horizontal Curves

Horizontal Curves shall be designed in accordance with Table 1.3 as follows:

TABLE 1.3
HORIZONTAL CURVES

DESIGN SPEED (MPH)	Max f	MINIMUM CURVE RADIUS* (FEET)
15	0.330	45
20	0.300	90
25	0.252	165
30	0.221	275
35	0.197	415
40	0.178	600
45	0.163	830

*Adapted from AASHTO Exhibit 3-41 for the no superelevation case.

1.5.2 Curb Return Radii

Minimum curb return radius dimensions are presented in Table 1.4.

TABLE 1.4
MINIMUM CURB RETURN RADII
(Measured Along Flowline)

THROUGH STREET	ARTERIAL	COLLECTOR	LOCAL	COMMERCIAL AND INDUSTRIAL
ALLEYS/	N/A	N/A	15ft.	N/A
PRIVATE	N/A	N/A	15ft.	N/A
LOCAL	35ft.	25ft.	20ft.	40ft.
COMMERCIAL AND INDUSTRIAL	40ft.	40ft.	40ft.	40ft.
COLLECTOR	35ft.	25ft.	25ft.	40ft.
ARTERIAL	50ft.	35ft.	35ft.	40ft.

1.5.3 Design Speed

Horizontal alignment design speed shall be consistent with the requirement for vertical alignment design speed.

If no superelevation is required and a normal crown section exists, the horizontal curve data as shown in Table 1.3 shall be used.

1.5.4 Barricades

Whenever roadways terminate due to project phasing, subdivision boundaries, etc., barricades shall be provided. Design and construction shall comply with the requirements of the most current edition of *The Manual of Uniform Traffic Control Devices* most recent edition and all *CDOT M-Standard Plans* shall be shown on the construction drawings, and installation shall be provided and maintained by the Developer.

1.5.5 Superelevation

Superelevation may be required for curves on arterial roadways and selected collector roadways. Horizontal curve radii and superelevation shall be in accordance with the recommendations of the *AASHTO "Green Book"*, (Horizontal Alignment).

Superelevation shall not be used on local or other roadway classifications with a design speed of 50 mph or less. Superelevation shall not be used without prior approval by the Town Engineer.

1.5.5.1 Definitions Regarding Superelevation

Superelevation Runoff: That length of roadway needed to accomplish the change in cross slope from a section with the adverse crown removed (flat) to the fully superelevated section, or vice versa.

Transition Points: Beginning or ending of tangent runout, superelevation runoff or full superelevation.

Tangent Runout: That length of roadway needed to accomplish the change in cross slope from a normal (2.0-percent) crown section to a section with the adverse crown removed (flat), or vice versa.

1.5.5.2 General

One of the most important factors to consider in highway safety is the centrifugal force generated when a vehicle traverses a curve. Centrifugal

force increases as the velocity of the vehicle and/or the degree of curvature increases.

It is impossible to balance centrifugal force by superelevation alone, because for any given curve radius a certain superelevation rate is exactly correct for only one driving speed. At all other speeds there will be a side thrust either outward or inward, relative to the curve center, which must be offset by side friction.

1.5.5.3 Standards for Superelevation

The *CDOT M Standard Plans* on Superelevation specify the required rate of superelevation for the various degrees of curvature.

Maximum superelevation rates of 0.04 to 0.06 foot per foot are commonly used on major streets. The lower value should be used where snow and ice are significant factors.

1.5.5.4 Urban Street Conditions

Every effort should be made to maintain standard rates of superelevation. However, in urban areas, street intersections, established street grades, curbs and drainage conditions may require a reduction in the rate of superelevation, or different rates for each half of the roadbed. In warping areas for drainage, adverse superelevations should be avoided.

1.5.5.5 Effect of Grade

Drivers tend to travel somewhat faster in the downgrade than in the upgrade direction. This should be recognized in the designs for divided highways and ramps on steep grades.

Where practical, the designer should use a higher design speed for the downgrade and a lower design speed for the upgrade. The variation of design speed will depend upon the rate and length of grade and the degree of curvature compared with other curves on the highway section

1.5.6 Cul-de-sacs

Criteria for cul-de-sacs shall be in accordance with the requirements of Section 1.2.

1.5.7 Sight Distances

1.5.7.1 General

The major considerations in alignment design are safety, grade, profile, road area, design, speed, sight distance, topography, drainage and performance of heavy-duty vehicles. Alignment should provide for safe and continuous operation at a uniform design speed. Road layout shall bear a logical relationship to existing, or platted roads in adjacent properties.

1.5.7.2 Horizontal Alignment

a. **Sight Distance**: Horizontal alignment must provide at least the minimum stopping distance for the design speed at all points. This includes visibility at intersections as well as around curves and roadside encroachments.

b. **Stopping Sight Distance**: The minimum stopping sight distance is the distance required by the driver of a vehicle traveling at the design speed to bring the vehicle to a stop after an object on the road becomes visible. Object height is typically assumed to be 2.0-feet above the road surface with the viewer's height is 3.50 ft. above road surface. All Stopping Sight Distances shall be evaluated in accordance with the *AASHTO "Green Book"* including along horizontal curves

Typical sight distance obstructions include fences, abutments, trees, structures, sideslopes, etc. In no case shall the stopping sight distance be less than the distances specified in Table 1.5. The sight distance design procedure shall assume a 6ft.-0-inch fence (as measured from actual finished grade) exists at all property lines except in the sight-distance triangles required at all intersections.

TABLE 1.5
STOPPING AND PASSING SIGHT DISTANCE

DESIGN SPEED (MPH)	STOPPING SIGHT DISTANCE (FT)	PASSING SIGHT DISTANCE (FT)
20	115	710
25	155	900
30	200	1,090
35	250	1,280
40	305	1,470
45	360	1,625
50	400	1,835
55	450	1,985

From AASHTO "Green Book" Exhibits 3-1 and 3-7 and represent minimum distances only.

c. **Passing Sight Distance**: Passing sight-distance is the minimum sight distance that must be available to enable the driver of one vehicle to pass another safely and comfortably without interfering with oncoming traffic traveling at the design speed. Two-lane roads should provide adequate passing zones. Minimum required passing sight distances for specified design speeds are given in Table 1.5

d. **Intersection and Driveway Sight Distance (Sight Triangle)**: There shall be an unobstructed sight distance along both approaches of both sides at an intersection within the R.O.W. for distances sufficient to allow the operators of vehicles, approaching simultaneously, to see each other in time to prevent collisions at the intersection. The sight triangle relationship developed for use in the Town is based upon the dimensions shown in Standard Drawing 2 for a stopped condition.

Any object within the sight triangle more than thirty-six (36) inches above the flowline elevation of the adjacent street shall constitute a sight obstruction, and shall be removed or lowered. Such objects include: buildings, cut slopes, hedges, trees, bushes, utility cabinets or tall crops. This design criteria also requires the elimination of parking (except on local streets) within the sight triangle and applies whether the intersecting roads are level or on grades. The sight distance shall be measured to the centerline of the closest through lane in both directions.

1.6 VERTICAL ALIGNMENT

Vertical alignment sight distances as with horizontal alignment shall be evaluated in accordance with the *AASHTO "Green Book"*. Both the horizontal and vertical sight distances should be checked to insure that the sight distance along the major highway is sufficient to allow a vehicle to cross or turn left, whichever is required. Design controls for vertical alignment are given in Table 1.6.

TABLE 1.6
VERTICAL ALIGNMENT CONTROLS

DESCRIPTION	DESIGN SPEED	MAX/(MIN) GRADE ALONG CENTER – LINE (%)	K-VALUE RANGES		MIN V.C.L.	
			CREST	SAG	CREST	SAG
LOCAL/PRIVATE	25	8 (1)	25-30	25-30	50	50
ALLEYS	15	8 (1)	25-30	25-30	50	50
COMMERCIAL / OFFICE	25	6 (1)	35-50	35-50	50	50
MINOR COLLECTOR	30	6 (1)	35-50	40-50	50	50
MAJOR COLLECTOR	35	6 (1)	55-65	55-65	50	50
MINOR ARTERIAL	35-45	6 (1)	70-105	65-85	70	60
MAJOR ARTERIAL	45-50	6 (1)	115-220	90-125	110	90

Notes:

1. The design speed is equal to the posted speed for local streets. For Commercial, Office and Collector Streets, the design speed is considered a minimum of five (5) mph over the posted speed for all roads. The design speed of arterials is considered to be ten (10) mph over posted and design speeds are minimum for arterials.
2. In certain cases grades less than the minimum grade specified in Table 1.6, may be permissible with the approval of the Town Engineer.
3. All vertical curves in knuckles and bubbles shall have minimum lengths of 50 feet.

1.6.1 Permissible Roadway Grades

A minimum longitudinal flowline grade of 1.0-percent shall be required on all Local streets, except at curb returns, knuckles, and bubbles where the minimum flowline grade shall be 2.0-percent.

A minimum longitudinal grade of 1.0-percent shall be required along the centerline of all Collector and Arterial streets unless otherwise approved by the Engineer.

The maximum allowable grade for any roadway is shown in Table 1.6 of these Standards.

The maximum sideslopes in either excavated earth or earthfill will be 3 to 1, unless otherwise approved. The maximum permissible cut slopes in rock are 2 to 1 unless otherwise approved.

1.6.2 Permissible Intersection Grades (Public Rights-of Way)

The maximum permissible grade at intersections will be in accordance with Standard Drawing 1. These grades are Maximum flowline grades for the stated distances (each side of the street) for the minor (intersecting) street. Desirable intersection grades should be in the range of two (2.0) to four (4.0) percent for all intersecting streets with the limit of three (3.0) percent for arterials.

The intersection grade of the major (through) street at the intersection may be dictated by design considerations for that street. The Town will dictate however, if the major street intersection grade exceeds 3-percent, the type of access and access control.

All private commercial driveways with curb return radii shall follow the standard set forth for a local street. The length of the maximum grade for the commercial driveway shall be a minimum of 50 feet measured from the flowline intersection of the public roadway.

All vertical curves in knuckles and bubbles shall have minimum lengths of 50 feet.

1.6.3 Changing Grades

The use of grade breaks in lieu of vertical curves is discouraged. However, if a grade break is necessary and the algebraic difference in grade is less than or equal to eight-tenths of one percent (0.008ft./ft.) along the roadway, a grade break will be permitted.

The maximum grade break allowed at the point of tangency at a curb return for local and collector roads shall be two (2.0) percent and for arterial roadways a maximum of one (1.0) percent.

1.6.4 Cross Fall

Except at intersections, or where superelevation is required, roadways shall be level from top of curb to top of curb (or flowline to flowline). The distance from intersections with which “cross-fall” will be permitted shall be determined by criteria in Section 1.4.4, Cross-Slope.

1.6.5 Vertical Curves

When the algebraic difference in grade exceeds eight tenths of one percent (0.008 ft./ft.), a vertical curve is to be used. Vertical Curve design criteria is presented in Table 1.6. All vertical curves shall be labeled, in the profile, with length of curve

(L), and K. The high point and low point elevations and stations shall also be labeled on the profile. All vertical curves in knuckles and bubbles shall have minimum lengths of 50 feet.

1.7 INTERSECTIONS

The following criteria shall apply at intersections:

1.7.1 The grade of the "through" street shall take precedence at intersections. At intersections of roadways with the same classification, the more important roadway, as determined by the Town Engineer, shall have this precedence. The design should warp side streets to match through streets with as short a transition as possible.

1.7.2 The key criteria for determining the elevation of the curb return on the side street and the amount of warp needed on a side street transitioning to a through street are:

a. Permissible grade in the stop/start lane (See Section 1.6.2).

b. Pavement cross slope at the points of curvature (PCR's) of the curb returns on the side street, and permissible warp in pavement cross slope (See Section 1.4.4).

c. Normal vertical curve criteria (See Section 1.6.5).

d. Vertical controls within the curb return itself (See Section 1.7.3).

1.7.3 The elevation at the PCR of the curb return on the through street is generally set by the grade of the through street in conjunction with normal pavement cross slope (2.0-percent).

1.7.4 Carrying the crown at a side street into the through street is permitted only when drainage considerations warrant such a design. Refer to Section 1.4.4.2 for street cross slope allowances.

1.7.5 Dipping the flowline to the extent that the lip of gutter is dipped is not permitted. Dipping the flowline is only permitted as specified by Standard Details concerning curb opening inlets. Tipping an inlet for the benefit of drainage is not permitted.

1.7.6 A more detailed review shall be performed for arterial-arterial intersections to maximize driveability. Few arterial intersections will have a uniform 2-percent cross slope, the majority of them having one or more sides warped. (See Sections 1.4.4 and 1.7.2 of this Chapter for rates of pavement warp allowed).

1.7.7 Whenever possible, intersections shall be made at right angles or radial to a curve. Intersections, that cannot meet this criterion, will require approval by the Town Engineer. Under no circumstances will any streets be permitted that intersect at angles less than eighty (80°) degrees.

1.7.8 Intersection sight distances shall conform to the requirements of the *AASHTO "Green Book"*, the most recent addition.

1.7.9 No more than two (2) streets shall intersect at one point.

1.7.10 Grades of Intersecting streets shall be as set forth in Standard Drawing 1 for the specified distance given in the table, unless otherwise approved by the Town Engineer.

1.7.11 The intersection of local streets with major collector streets shall be minimized. Whenever possible, proposed intersections along one (1) side of the street shall coincide with existing or proposed intersections on the opposite side of such street. In any event, where a centerline offset or jog occurs, at an intersection, the distances between centerlines of the intersecting streets shall not be less than one hundred fifty feet. Roads with medians are exempted from this requirement.

1.7.12 Unless no other alternative is practicable or legally possible, no two (2) streets may intersect with any other street on the same side at a distance of less than three hundred (300) feet measured from centerline to centerline of the intersecting streets. When the intersected street is an arterial, the distance between the intersecting streets shall be six hundred (600) feet..

1.7.13 The minimum fall around curb returns, along the flowline shall be 2-percent.

1.8 CURB RETURN PROFILES

Curb return profiles are required for radii equal to or greater than thirty (30) feet within the public right-of-way. A midpoint elevation along the arc length of the curb return shall be shown in plan view for all radii less than 30 feet. Curb return design shall be set in accordance with the following design procedure. General standards for flowline control and profiles within the curb returns shall be as follows:

1.8.1 The point of tangency at each curb return shall be determined by the projected tangent grade beginning at the point of intersection (P.I.) of the flowlines.

1.8.2 The arc length and external distance of the curb return shall be computed and indicated on the drawing.

1.8.3 Show the corresponding flowline (or top of curb) grade for each roadway beyond the PCR.

1.8.4 Design the flowline of the curb return such that the maximum slope along the flowline does not exceed eight (8) percent. Grade breaks at the PCR's will not exceed two (2) percent for local and collector streets and one (1) percent for arterials. Maximum vertical curves will equal the arc length of the curb return. The elevation and location of the high or low point within the return, if applicable, is to be called out in the profile. Warp of the side streets shall match across the street within the "L" distance shown on Standard Drawing 1. No more than a 1 foot vertical difference in elevation across the street at the PCR is allowed.

1.8.5 Scale for the curb return profile is 1-inch = 10-feet horizontally and 1-inch = 1-feet vertically.

1.8.6 Curb return radii, existing and proposed, shall be shown.

1.9 CONNECTION WITH EXISTING ROADWAYS

1.9.1 Connection with existing roadways shall be smooth transitions conforming to normal vertical curve criteria (See Section 1.6) if the algebraic difference in grade (A) between the existing and proposed grade exceeds one (0.008 ft./ft/) percent. When a vertical curve is used to make this transition, it shall be fully completed prior to the connection with the existing improvement, and shall also comply with the grade requirements at intersection approaches.

1.9.2 Existing grade shall be shown for at least three hundred (300) feet with field verified record drawings showing stations and elevations at twenty-five (25) foot intervals. In the case of connection with an existing intersection, these record drawings are to be shown within a three hundred (300) foot radius of the intersection. This information will be included in the plan and profile those shows that proposed roadway.

1.9.3 Limits and characteristics of the existing improvements are the primary concern in the plan view. Such characteristics include horizontal alignment, off-site intersections, limits of the improvement, etc.

1.9.4 Previously approved designs for the existing improvement are not an acceptable means of establishing existing grades, however, they are to be referenced on the construction plan, where they occur.

1.9.5 The basis of the as-built elevations shall be the same as the design elevations (both flowlines or both top or curbs, etc,) when possible. All elevations shall be based on USGS or other datum approved by the Town Engineer.

1.10 OFF-SITE DESIGN

The design grade, and existing ground at that design grade, of all roadways that dead end due to project phasing, subdivision boundaries, etc., shall be continued, in the same plan and profile as the proposed design, for at least five hundred (500) feet or to its intersection with an arterial roadway. This limit shall be extended to one thousand (1,000) feet when arterial roadways are being designed.

1.10.1 If the off-site roadway, adjacent to the proposed development is not fully improved, the developer is responsible for the design and construction of a transition for the safe conveyance of traffic from his improved section to the existing roadway. The following formula shall be applied to the taper of lane change necessary for this transition:

$$L = WS^2/60$$

Where:

L = Length of transition in feet
W = Width of offset in feet
S = Speed limit or 85th percentile speed.

1.10.2 The Town Engineer should be contacted to approve unusual transition criteria. This contact is the responsibility of the applicant.

1.11 ACCELERATION/DECELERATION LANES

The design of the arterial street system depends upon the proper control of access to developments. The location and design of access points must minimize traffic hazards and interference to through traffic movements. Acceleration/Deceleration lanes shall be designed in accordance with the most recent edition of the *State of Colorado, State Highway Access Code*, appropriate Sections of the *CDOT Road Design Manual* and applicable *CDOT Standards*. The need for acceleration or deceleration lanes shall be established by the approved traffic impact study for the final plat or final development plan.

1.12 BUS PULLOUT LANES

If recommended by the Regional Transportation District, bus pullout lanes shall be designed and constructed by the adjacent Developer.

1.12.1 The design of the pullout lanes will be governed by dimensions shown in Table 1.7 and shall be reviewed and approved according to procedures set forth in these Regulations.

TABLE 1.7
BUS PULLOUT LANES

SPEED LIMIT	LEAD-IN LENGTH	LEAD-OUT LENGTH
35 MPH & UNDER	60ft.	60ft.
40 MPH	100ft.	70ft.
45 MPH	150ft.	80ft.
50 MPH	200ft.	90ft.
55 MPH	250ft.	100ft.

1.12.2 Bus pullouts shall be constructed with no less than 50 feet between an intersection curb return curve (PCR) and end of the lead-in taper.

1.13 CONSTRUCTION TRAFFIC CONTROL

1.13.1 Pedestrian Traffic

Every precaution shall be taken to ensure that construction work does not interfere with the movement of pedestrian traffic, which shall be maintained on the sidewalk at all times. Flagmen shall be provided for guidance as necessary.

1.13.1.2 Where an excavation interrupts the continuity of the sidewalk, the contractor shall provide suitable bridge or deck facilities, to be supplemented by the use of such proper devices and measures as prescribed in the *Manual of Uniform Traffic Control Devices* most recent edition, for the safe and uninterrupted movement of pedestrian traffic. The edges or ends of the pedestrian bridge or decking shall be beveled or chamfered to a thin edge to prevent tripping.

1.13.1.3 Temporary diversion walkways shall be hard surfaced and electric lighting shall be provided and kept continuously burning during hours of darkness, unless otherwise directed by the Town Engineer.

1.13.1.4 Unless otherwise authorized by the Town Engineer, pedestrians shall not be placed in the position of having to walk on a traveled portion of a roadway.

1.13.1.5 Under certain conditions, it may be necessary to divert pedestrians to the sidewalk on the opposite side of the street. Such crossings shall only be made at intersections or at marked pedestrian crossovers, with the Town Engineer's approval.

1.13.1.6 Facilities satisfactory to the Town Engineer shall be provided for pedestrians crossing at comers, pedestrian crossovers and public transportation stops.

1.13.2 Vehicular Traffic

1.13.2.1 Construction work zone traffic shall be controlled by signs, barricades, detours, etc., which are designed and installed in accordance with the most recent edition of *The Manual of Uniform Traffic Control Devices*, and applicable Town Traffic Regulations. A Traffic control plan shall be submitted and accepted by the Town Engineer or his designate prior to the start of any construction.

1.13.2.2 During construction of new facilities, traffic control should strive to keep the motorist from entering the work area. The primary means to accomplish this are by use of temporary barricades, located in advance of the point where new construction joins existing and by appropriate signing. New construction shall not be opened to traffic, or construction traffic control removed, without the approval of the Town Engineer.

1.13.2.3 In general terms, a construction traffic control plan must be drawn on a map. The traffic control plan should be superimposed on record drawings, construction plan drawings, or other detailed maps.

1.13.2.4 The *Manual on Uniform Traffic Control Devices* shall be the basis upon which the construction traffic control plan is designed, in concert with proper, prudent, and safe engineering practice. All necessary signing, striping, channelization devices, barricading flagging, etc. shall be shown on the plan.

1.13.2.5 In concept, Town streets shall not be closed overnight, and work shall not force road or lane closures before 8:30 a.m. or after 3:30 p.m. If exceptions to this are required, this shall be so noted on the construction traffic control plan and must be specifically approved by the Town Engineer.

1.13.2.6 Directional access on roadways may be restricted (minimum travel lane width in construction area is 10 feet), but proper controls including flagging must be indicated. Removal of on-street parking should be considered, and noted where applicable.

1.14 MEDIAN ISLANDS

1.14.1 Median islands shall be designed per the Standard Drawings as set forth herein.

1.14.2 The nose of the median island shall not extend past the curb return at the intersection.

1.14.3 Landscaping on median islands shall have a mature height of 24 inches or less above the traveled way in areas around intersections to facilitate adequate sight distance and will preferably be dry land or native vegetation. If irrigation is planned for a median island, mitigation will be provided to protect the subgrade under the pavement from being saturated by using the median island detailed in the Standard Drawings in the Appendix.

1.14.4 A minimum flowline-flowline dimension of 20 feet must be maintained on both sides of all median islands. Refer to Roadway Standard Drawings in the Appendix for required flowline-flowline dimensions for specific roadway classifications.

1.14.5 When median islands are constructed/designed for concrete streets and the island is hardscape, the Developer shall install twice the thickness of the expansion material on each side of the median between the back of curb and "hardscape" and seal the expansion material.

1.14.6 Median islands 4 feet wide or less may not be landscaped and must be designed as stamped or patterned concrete. All median materials, including colors, shall be approved by the Town Engineer to ensure uniformity of construction throughout the Town.

1.15 SIGNAGE AND STRIPING CRITERIA

Because the Town will maintain the permanent traffic control devices on public rights-of-way, all traffic control devices shall be fabricated and installed in accordance with these Regulations. A signage and striping plan and detail sheet, approved by the Town Engineer, shall be included in all sets of construction plans.

Permanent signage and striping shall be completely in place before any new roadway is opened to the public. These standards are to be used in conjunction with other applicable Town Regulations.

Traffic signal installation and equipment shall conform to *CDOT Construction Specifications*. All signals, signs and other traffic control devices shall be installed in accordance with the most current edition of *The Manual on Uniform Traffic Control Devices (MUTCD)*. Signal Warrants shall be met for signal installation.

1.15.1 Reflectivity

All traffic control devices and all regulatory signs must have reflective materials. All reflective materials must qualify at 70-candlepower (E.G.) or above (High Intensity). All signs, or traffic control devices, must have a seven-year materials warranty. Red regulatory signs must be High intensity grade reflectivity or greater; in particular, all STOP, YIELD, or DO NOT ENTER signs.

1.15.2 Design and Size

Sign specifications and diagrams are detailed in the *MUTCD* and the Federal *Standard Highway Signs.* (Publication available from the U.S. Department of Transportation, Federal Highway Administration) Acceptable sign sizes are listed in the standard column of the table printed with each diagram. Expressway and construction signs will be a minimum 36 inches. STOP signs used at major roadway intersections shall be a minimum 36 inches.

1.15.3 Backing Plates

Aluminum blanks of .080 gauge is standard, except for signs larger than 36 x 36 inches, which shall be .100 or .125 gauge aluminum.

1.15.4 Posts and Boots

1.15.4.1 Signs shall be mounted on 2.25-inch x 2.25-inch square galvanized steel tubing, all four sides punched with 3/8-inch holes at one inch (1-inch) centers. Refer to Standard Drawings in the Appendix of these Standards. Posts must be of appropriate length to pass the MUTCD specifications for the location, must conform to *CDOT Construction Specifications, Section 614*, and must meet the Federal breakaway standards. Installation boots are to be two and one-fourth inch by three feet (2 ¼-inch x 3-feet) four (4) punch tubing, driven down flush to within 1-inch of ground level.

1.15.4.2 Sign boots are to be driven a minimum of three feet (3ft.) into the ground, and longer boots may be required because of soil composition and compaction.

1.15.4.3 The height to the bottom of the sign assembly shall be at least eight feet (8ft.) above the adjacent roadway crown, when installed exclusively for street name posting. When combined with traffic control (STOP or YIELD) signs, the street name sign assembly shall be at least nine feet (9ft.) above the adjacent roadway crown.

1.15.4.4 Post caps and crosses shall have five-inch by one-fourth inch (5-inch x ¼- inch) slots for plates.

1.15.4.5 Street name assembly should be located at point of curvature of corner radius and should be placed according to the requirements as stated in 1.15.5 (Street Name Signs) of these Standards. When street name assembly is combined with regulatory signs, sign placement for the regulatory sign shall govern.

1.15.5 Street Names, Addresses and Signs

Street names shall be assigned by the developer and are subject to the Town's approval. Proposed streets that are in obvious alignment with existing streets shall be given the same name. Newly created streets shall be given names that neither duplicate nor are phonetically similar to existing streets within the Town's planning jurisdiction, regardless of the use of different suffixes.

1.15.5.1 Building Addresses shall be assigned and/or approved by the Town.

1.15.5.2 Six-inch plates, up to 30 inches long, may be used at all minor intersections, minimum two plates per street sign assembly. Nine-inch plates shall be used at all major intersections. All 9-inch by 3/16-inch and 6-inch by 30-inch plates will be installed, two for each road, minimum four plates per street sign assembly and shall be installed with end bolts on all plates. In the instance where a street changes names, such name changes should be designated on the street name assembly by using directional arrows and will require two additional plates.

1.15.5.3 Street name assembly should be located at the point of curvature of the corner radius and should be placed according to the following, as measured from the edge of the sign. When the street name assembly is combined with regulatory signs, sign placement for the regulatory sign shall govern.

Curb, Gutter and Sidewalk Combination:
Two feet behind sidewalk

Curb with no Sidewalk or Detached Sidewalk:
Two to five feet behind curb on local streets. On collector streets, 4 to 6 feet behind curb, and on arterials, 6 to 8 feet behind curb.

No Curb or Gutter:
Six to twelve feet from edge of pavement.

Gravel Road:
Six to eighteen feet from edge of travel lane and outside of ditch.

1.15.5.4 The height to the bottom of the sign assembly shall be at least eight feet above the adjacent roadway crown, when installed exclusively for street name posting. When combined with traffic control (STOP or YIELD) signs, the street name sign assembly shall be at least nine feet above the adjacent roadway crown.

1.15.5.5 Sign assemblies shall be installed on standard 1-3/4-inch, four (4) punch square tubing, (3/8-inch diameter holes on one inch centers, galvanized), or mounted on available utility poles with suitable hardware, when required lateral clearance can be achieved.

1.15.5.6 When street name sign assemblies are posted with traffic control signs, posts must be standard 2-inch tubing, using 2 1/4-inch x 3-foot boots driven until flush with the grade. For exclusive street name installations, standard 1-3/4-inch tubing with 2-inch x 3-foot boots may be used.

1.15.5.7 Sign boots are to be driven a minimum of three feet into the ground. Longer boots may be required because of soil composition and compaction.

1.15.5.8 Post caps and crosses shall be 5 inch x ¼-inch slots for plates.

1.15.5.9 All street signs will be high intensity white on reflectorized green. Lettering shall be Series C.

1.15.6 Criteria on Special Allowances for Street Name Sign Variations

1.15.6.1 Plans for any variances must be submitted to and reviewed by the Town Engineer. List all specific variances from the Town Standards in the special footnote box on the first page of the plans.

1.15.6.2 All street name signage size and reflectivity (red may not be used as background color) shall meet or exceed Town standards.

1.15.7 Consultant Engineer's Responsibility

These requirements for signage are intended for typical applications of signage and striping for standard conditions. These Standards do not alleviate the responsibility of the Consultant Engineer from exercising sound engineering judgment or from exceeding minimum standards in specific cases where conditions warrant.

1.15.8 Striping

1.15.8.1 All new striping on newly constructed streets shall meet the minimum standards for thermoplastic or epoxy applications.

1.15.8.2 All striping shall be in compliance with most current editions of the *MUTCD*.

1.15.8.3 All temporary striping shall conform to the most current edition of *Standard Specifications for Road and Bridge Construction* published by the Colorado Department of Transportation. All temporary markings shall be removed prior to the installation of the permanent striping.

1.15.8.4 All stop bars shall be white and a minimum of 12-inches wide. All centerline striping shall be yellow and 4-inches wide. All raised crosswalk striping shall be white and a minimum of 8-inches wide.

1.15.8.5 All striping shall be shown along with signing on the roadway plans of the construction plans or on a separate sheet if the roadway design is for a collector or arterial roadway.

1.16 FIRE LANES

Any secondary access not constructed as part of the dedicated public street system shall meet the following design criteria in addition to the roadway design criteria within these Regulations. Fire lanes shall be required when safe access to structures within a Project is limited. The requirement for fire lanes shall be determined in the PRELIMINARY PLAT process by the Fire Department and/or Town Engineer.

1.17 REQUIRED RIGHT-OF-WAY DESIGNATION

1.17.1 At the time of final plat approval, the developer must dedicate to the Town the rights-of way required in these Sections along with all streets, alleys, walks, open space and easements shown on the plat, unless there are exceptions specifically noted on the plat. The dedicated rights-of-way will be shown on the final plat along with the dedication endorsement. Such dedication may be required to be made to the appropriate special district, or as required otherwise by the Town, with reversion clauses to the Town included.

1.17.2 Where trails or bikeways are shown on the *Town of Superior Comprehensive Plan* as crossing a parcel proposed for development, the developer shall work with the Town to establish an alignment through the parcel and dedicate this alignment to the Town. In general, the width for trail or bikeway dedication shall be thirty (30)

feet, if not associated with a street, unless otherwise approved by the Town. Areas dedicated for trails or bikeways may be included in the open space requirements of the development.

1.18 BRIDGES

All Bridges shall be constructed in accordance with the most recent edition of the *CDOT Standards and Specifications for Roadway and Bridge Construction*, except that bridges on streets not intended for public dedication may be approved, if designed by a licensed engineer.

1.19 TRAFFIC CALMING

Traffic calming involves changes in street alignments, installation of barriers, and other physical measures to reduce traffic speeds and/or cut-through volumes, in the interest of street safety, livability, and other public purposes. It is the combination of physical measures that reduce the negative effects of motor vehicle use, alter driver behavior, and improve conditions for non-motorized street users.

What is a safe and livable street? Many studies have shown that residents are more satisfied with the street environment when traffic volume speeds are low to moderate. Tolerable limits appear to be less than 800 vehicles per day and top speeds of 20 mph.

The Town of Superior's street standards recognize the need to balance safety, efficiency of service, livability and economy. A hierarchy of street classifications has been established, with the higher classification (major and minor arterials and major collectors) designed to carry higher volumes and higher speeds and the lower classifications (minor collector and local streets) designed primarily to provide land access with expected lower volumes and lower speeds. Clearly, traffic calming measures would not be appropriate on arterials or major collectors. Minor collectors or local streets should be designed with traffic calming in mind. In identifying streets that may be candidates for traffic calming measures, traffic volume and unimpeded street length should be considered. Unimpeded street length is the distance between speed impediments, i.e. Stop signs, traffic signals, sharp turns, cul-de-sacs, etc. Streets that generally will require implementation of traffic calming measures are listed in Table 1.8 along with minimum criteria to qualify for Traffic Calming.

TABLE 1.8
MINIMUM CRITERIA FOR TRAFFIC CALMING

Classification	Unimpeded Street Length	Traffic Volume
Local Street	> 1,200 feet	< 500 vpd
Local Street	> 900 feet	500 – 2,000 vpd
Minor Collector	> 900 feet	> 2,000 vpd

vpd = vehicles per day

- There are many types of traffic calming measures that could be used on streets predicted to have higher than desired speeds or traffic volumes. The Institute of Transportation Engineers (ITE) has published several reports describing traffic calming measures and their effectiveness, that can be found at http://www.ite.org/traffic/index.asp

These resources should be consulted to identify and design appropriate traffic calming measures applicable for new developments. In general, vertical elements such as speed bumps and humps should be avoided while horizontal elements such as roadway narrowing, medians, bulbouts and traffic circles, etc. should be used.

CHAPTER 2

ACCESS REQUIREMENTS AND CRITERIA

TABLE OF CONTENTS

Section	Title	Page
2.1	General	2.1
2.2	Criteria for Access Onto Town Roadways	2.1
2.3	Basic Principles for Curb Openings and Driveways	2.4
2.4	Definition of Terms	2.6
2.5	General Requirements	2.7
2.6	Control Dimensions	2.9
2.7	Unpermitted Access	2.10

TOWN OF SUPERIOR

CHAPTER 2
ACCESS REQUIREMENTS AND CRITERIA

2.1 GENERAL

Access to Town streets and roadways are approved through one of two mechanisms: (1) For new developments, access is granted through Town Board approval on the final plat; (2) To obtain access from existing developed property to Town streets, the mechanism is dependent on the zoning:

a. For Planned Developments, new or altered access must be obtained through the Town's Platting Process. This involves applying through the Planning Department to create or amend the property's final development plan, which must be approved by the Planning Commission and Town Board. The PD application should be accompanied by appropriate plans for the proposed access and technical justification, including justification for the extent of improvements proposed at the access point.

b. For straight-zoned property, application for access can be made using the Town's Permit Application procedure. This application should be accompanied by plans of the proposed access and technical justification for the access and associated public improvements.

The Public Works Department staff is available to provide advice on the extent of technical justification required for any access request. It is recommended that this advice be sought prior to submitting any application.

All residential access permits shall be issued through the Town's Public Works Department. The Public Works Division will continue to review all commercial and industrial access (Site Plans) and State Highway access requests.

2.2 CRITERIA FOR ACCESS ONTO TOWN ROADWAYS

2.2.1 State Highways

Access to State Highways is governed by the State Highway Access Code.

2.2.2 Major Arterials

2.2.2.1 An Access Permit must be obtained from the Town for any private access constructed to a major arterial. In general, the Town will require

an Access Management Plan to be developed and approved for all arterials.

2.2.2.2 Generally, no private direct access shall be allowed onto a major arterial, unless a signal progression plan has been approved. Private direct access to major arterials may be permitted only when the property in question has no other reasonable access to the general street system, or when denial of direct access to the major arterial and alternative direct access to another roadway would cause unacceptable traffic operation and safety problems to the overall traffic flow of the general street system. When private access must be provided, the following shall be considered:

a. Such access shall continue only until such time that some other reasonable access to a lower function category street is available and permitted. The Access Permit should specify the future reasonable access location(s), if known, and under what circumstances, what changes will be required.

b. No more than one access shall be provided to an individual parcel, or to contiguous parcels, under the same ownership, unless it can be shown that: (1) allowing only one access conflicts with safety regulations, (e.g., fire access); or (2) additional access would significantly benefit safety and operation of the highway or street and is necessary to the safe and efficient use of the property.

c. An access shall be limited to right turns only, unless: (1) it has the potential for signalization; (2) left turns would not create unreasonable congestion or safety problems and lower the level of service; and (3) alternatives to the left turns would not cause unacceptable traffic operation and safety problems to the general street system.

2.2.2.3 Public direct access to a major arterial, where left turns are to be permitted, must meet the signal spacing criteria following. Those that do not meet these requirements shall be limited to right turns only, unless they meet the requirements of 2.2.2.2.c above. No local streets shall be permitted to intersect major arterials.

2.2.2.4 **<u>Spacing and Signalization Criteria</u>**

a. In general terms, full access to major arterials shall be limited to one-half mile intervals, plus or minus approximately 200 feet, in order to achieve good speed, capacity, and optional signal progression. However, to provide flexibility for both existing and

future conditions, an approved engineering analysis of signal progression shall be made to properly locate any proposed access that may require signalization.

2.2.3 Minor Arterials

2.2.3.1 An Access Permit must be obtained from the Town for any private access constructed to a minor arterial.

2.2.3.2 Generally, no private direct access shall be allowed onto a minor arterial. Private direct access onto a minor arterial may be permitted if it:

a. Does not have the potential for signalization, as per the requirements of Sections 2.2.2.2.b and 2.2.2.2.c above.

b. Does have the potential for signalization, if it meets the signal spacing requirements for intersecting public streets stated below, and does not interfere with the location, planning, and operation of the general street system and access to nearby properties.

2.2.3.3 Public direct access to a minor arterial, where left turns are to be permitted, must meet the signal spacing criteria following. Those that do not meet these requirements shall be limited to right turns only, unless they meet the requirements of Section 2.2.3.2.c above. No local streets shall be permitted to intersect minor arterials.

2.2.3.4 Spacing and Signalization Criteria

a. In general terms, full access to minor arterials shall be limited to one-quarter mile intervals, plus or minus approximately 100 feet, in order to achieve good speed, capacity, and optional signal progression.

b. However, to provide flexibility for both existing and future conditions, an approved engineering analysis of signal progression shall be made to properly locate any proposed access that may require signalization.

2.2.4 Major and Minor Collectors

2.2.4.1 Private access to collectors shall be governed by the curb opening and driveway criteria following. Single family residence access to collectors is not permitted, unless access to a lower function category street is not available.

2.2.4.2 Public streets shall intersect minor collectors not closer than 330 feet from each other, (centerline to centerline), and shall intersect major collectors not closer than 660 feet from each other, (centerline to centerline). On minor collectors, the closest local street Intersection to an arterial shall be 330 feet from the arterial (R.O.W. line of arterial to centerline of local street), and on major collectors shall be 660 feet from the arterial (R.O.W. line of arterial to centerline of local street). On minor collectors with an ultimate projected traffic volume of less than 2,500 V.P.D., intersection spacing may be 250 feet, (centerline to centerline), for first intersection from an arterial; 210 feet centerline to R.O.W. of arterial.

2.2.5 Local Streets

2.2.5.1 Private access to local streets shall be governed by the curb opening and driveway criteria following.

2.2.5.2 Public streets should not intersect local roadways closer than 150 feet from each other, (centerline to centerline). On a local street, the closest intersection to a collector street shall be at least 210 feet, (centerline to centerline), and to an arterial street, the closest intersection shall be 210 feet, (arterial R.O.W. line to local street centerline).

When entry streets are used, the closest local street to an arterial shall be 160 feet (centerline of local street to R.O.W. of arterial); the closest local street to a minor collector shall be 160 feet (centerline to centerline); and the closest street to a major collector shall be 180 feet (centerline to centerline).

The closest local street intersection to an arterial, measured from the arterial R.O.W. to the local street centerline, is outlined in the table below.

Roadway Classification	Minimum Spacing
Major Collector	660 feet
Minor Collector	330 feet
Minor Collector <2500 vpd	210 feet
Entry Street	160 feet

2.3 BASIC PRINCIPLES FOR CURB OPENINGS AND DRIVEWAYS

2.3.1 Certain control values for curb openings and driveways require minimum dimensions in some instances and maximum values for other dimensions. The design of curb openings and driveways within the range of these dimensions will provide for good service on the part of the motorist using the driveway, while at

the same time minimizing the interference to the traffic using the street. By controlling the location and width of openings or driveways along the street, it will be possible to avoid or eliminate long, open stretches where motorists can indiscriminately drive onto the street. The width of opening established in these Regulations is based on studies which indicate that the various width openings will accommodate vehicles of maximum size authorized on Town streets and highways. In case of conflict between requirements in the various sections of this chapter, the more restrictive condition will normally apply.

2.3.2 The opening or driveway width should be adequate to handle properly the anticipated traffic volume and character of traffic, as well as being within the limits specified for the type of property development. The controls established for curb openings and driveways shall apply to existing streets as well as new streets that may be developed in the future.

2.3.3 To the greatest extent possible, all openings for driveways shall be located at the point of optimum sight distance along the street. For openings and driveways to commercial establishments and service stations, there shall be sufficient space reasonably cleared of any obstructions, such that drivers entering the property will give sufficient sight distance to enable them to make proper and safe movements. The profile of a driveway approach and the grading of the adjacent area shall be such that when a vehicle is located on the driveway outside the traveled portion of the street, the driver can see a sufficient distance in both directions so as to enable him to enter the street without creating a hazardous traffic situation. The driveway profile grade within public R.O.W. shall not exceed four (4%) percent.

2.3.4 Any adjustments which must be made to utility poles, street light standards, fire hydrants, catch basins or intakes, traffic signs and signals, or other public improvements or installations which are necessary as the result of the curb openings or driveways, shall be accomplished without any cost to the Town. Also, any curb opening or driveway which has been abandoned shall be restored by the property owner, except where such abandonment has been made at the request of, or for the convenience of, the Town.

2.3.5 Driveway approaches, whereby the driveway is to serve as an entrance only or as an exit only, shall be appropriately signed by, and at the expense of, the property owner. The property owner will be required to provide some physical means of ensuring that the motorists will use the driveway either as an entrance only or an exit only, but not both.

2.3.6 **<u>Rural Road Access from Private Property</u>**

New driveway accesses from private property to an existing graveled Town road shall be required to install a minimum of six inches (6") of compacted Class 6 aggregate base course or equivalent material from the R.O.W. line to the edge of

the traveled roadway. The width of the driveway within the R.O.W. shall be 16 to 22 feet and a minimum 24-inch diameter corrugated metal pipe (CMP) culvert, with flared end sections, shall be required at the established ditch flowline. A sketch plan of the installation must be submitted with the access pen-nit application. C.M.P. culverts are only allowed for private residential driveways, not for storm sewer or commercial driveways.

2.3.7 Access to Roadways with No Curb and Gutter

Private drive access to local, collector or arterial roadways that have no curb and/or gutter improvements shall be constructed to meet the following requirements:

2.3.7.1 Drive shall extend from R.O.W. line to edge of existing driving surface and shall be constructed in compliance with Table 3.4 of these Standards.

2.3.7.2 The drive entrance shall be a minimum of 16 feet wide (maximum 22 feet) in the Town R.O.W.

2.3.7.3 A 24-inch diameter CMP culvert, (or comparable size arch or elliptical pipe), shall be installed at the established roadside ditch flowline beneath the private drive access.

2.3.7.4 At no time will it be acceptable for asphalt or concrete pavement to be placed directly on the culvert.

2.3.8 Maintenance of the access and drainage improvements within Town R.O.W. shall be the responsibility of the adjacent property owner.

2.4 DEFINITION OF TERMS

Several terms are used herein which have a somewhat distinct meaning. For the purpose of clarity, the definitions of some of these terms are listed below:

Width of Curb Opening (W): The width of curb opening measured at the curb line. For commercial and industrial driveways see Table 2.1.

Edge Clearance (E): The distance measured along curb line from the nearest edge of the curb opening to a point where the property line extended intersects the curb line.

Corner Clearance (C): At an intersecting street, the distance measured along the curb line from the projection of the intersecting street flowline to the nearest edge of the curb opening.

Distance Between Double Driveways (D): The distance measured along the curb line between the inside edges of two adjacent curb openings.

Setback(S): The lateral distance measured perpendicular to the street R.O.W. line and extending from the R.O.W. line to the closest point of a building or gasoline service pump island.

Frontage: The distance along the street R.O.W. line of a single property or development within the property lines. Corner property at an intersection would have a separate frontage along each street.

Residential: Property used primarily for residential purposes such as single family, two-family and multi-family units.

a. Single Family (SF) Residential - Single, detached family dwelling units or double bungalows or duplexes.

b. Multi Family (MF) Residential - Three or more attached dwelling units including, townhouses, condominiums and apartments.

Commercial: Establishments where the buying and selling of commodities, entertainment or services is carried on. Included are such uses as service stations, office buildings, restaurants, hotels, motels, banks, grocery stores, theaters, parking lots, trailer courts and public buildings.

Service Station: Any property where flammable liquids used as motor vehicle fuel are stored and dispensed from fixed equipment into fuel tanks of motor vehicles.

Industrial or Warehouse: Any establishment that-manufactures or stores an article or product.

2.5 GENERAL REQUIREMENTS

2.5.1 Number of Openings

SF Residential - In general, each SF residential property shall be limited to one access point.

MF Residential - in general, access shall be determined by information provided by the Developer in the Traffic Impact Analysis and by comments generated during the Town's review and acceptance of that study.

Commercial - In general, commercial property having less than 150 feet of frontage and located mid-block shall be limited to one access point to the street.

An exception to this rule may be where a building is constructed in the middle of a lot and parking is provided for on each side of the building.

A second access point may be allowed for commercial property and service stations having more than 150 feet of frontage where there is sufficient frontage to provide for minimum and maximum requirements. For commercial property and service stations located on a corner, one access to each street may be permitted.

Industrial - Access shall be determined-on a case-by-case basis. The Town shall consider good traffic engineering practice and the information provided by the applicant in the Traffic Impact Analysis accompanying his submittal.

2.5.2 Amount of Curb Opening Permitted

The total length of curb opening on a street for access to a commercial property or service station shall not exceed 40 percent of the property frontage. This requirement does not apply to residential type curb openings.

2.5.3 Entrance Angle

In general, the entrance angle for all driveway approaches shall be as near 90 degrees to the centerline of the street as possible. The minimum angle permitted is 80 degrees.

2.5.4 Minimum Space Between Openings (D)

The minimum spacing between curb openings shall be 35 feet measured at-the curb line. This spacing will apply to the distance between drives serving adjoining properties. This does not apply to residential projects using mountable curb, gutter, and sidewalks. A 50-foot spacing applies to commercial openings.

2.5.5 Joint Entrances

As determined by the Town, joint entrances will be provided to serve two adjacent properties. Joint entrances are to be centered on the common property line.

2.5.6 Access Approaches

Access approaches shall not be approved for parking or loading areas that require backing maneuvers within Town right-of-way. All off-street parking areas must include on-site maneuvering, areas and aisles to permit user vehicles to enter and exit the site in forward drive without hesitation.

2.5.7 If a parcel of land with direct access has been in a state of non-use for more than four years, recommencement of access use shall be considered a change in use. If the use of the access exceeds the design limitations of the access or is non-conforming with the present code, a new permit may be required.

2.5.8 If the use of an existing access to Town right-of-way changes, or there is a change in the use of the property, a new access permit may be required. Change in access or property use may include, but is not limited to, change in the amount or type of traffic, structural modifications, remodeling, chancre in type of business, expansion in existing business, change in zoning, change in property division creating new parcels, etc.

2.6 CONTROL DIMENSIONS

To accomplish the objectives of the basic principles stated earlier, certain dimensions are necessary. There are many variables, which affect these dimensions. Some of the variables are as follows: type of street classification, private property development, volume and type of traffic and width of right-of-way.

2.6.1 Width of Curb Opening (W)

The total width of curb opening for properties on various Functional Street Classifications shall be in conformance with Table 2.1

TABLE 2.1
WIDTH OF CURB OPENINGS (W) (in ft.)

	RESIDENTIAL				
	SF	**MF**	**COMMERCIAL**	**SERVICE STATION**	**INDUSTRIAL**
FREEWAY	N/A	N/A	N/A	N/A	N/A
MAJOR ARTERIAL	IF ALLOWED UNDER 2.2.3.2.c, DESIGN AS COLLECTOR				
MINOR ARTERIAL	IF ALLOWED UNDER 2.2.3.2.c, DESIGN AS COLLECTOR				
MAJOR COLLECTOR	N/A	30-35	30-40	30-40	30-40
MINOR COLLECTOR	N/A	30-35	30-40	30-40	30-40
LOCAL	(**)	30-35	30-40	30-40	30-40

**For single family residential access to local streets:

Local (Suburban - with curb-gutter-sidewalk) = 16 to 30 feet
Local (Urban - without curb-gutter-sidewalk) = 16 to 22 feet
Local (Rural – Ag. zoned) = 16 to 22 feet

Note: 1. Curb openings of 30 feet or more must be constructed as a radius curb return.
2. If a radius curb return is used, the width of the allowed driveway is measured by NOT Counting the two (2) 20 foot radii, or in other words, it is measured at the throat extended to flowline.

2.6.2 Edge Clearance (E)

Residential

Arterial - None. (May not exceed the property line extended)
Local - None. (May not exceed the property line extended)

Commercial and Service Stations

Arterial - 25 feet minimum
Local - 25 feet minimum

Note: Joint access with adjoining property is encouraged. Joint access shall be the only justification for reducing the minimum edge clearance dimension.

2.6.3 Corner Clearance (C)

It is important to locate driveways away from major intersections. This constraint is as much for the ability to enter and leave the property, as for the benefit of intersection safety and operations. Exiting a driveway during peak-hour conditions at traffic signals is difficult where the queue of standing or slow-moving vehicles never allows a sufficient gap for entry from the driveway.

2.6.4 Sight Distance

Sight distance for curb openings to private property shall consist of a sight triangle conforming to the requirements of Section I of these Regulations. This does not apply to driveways in single family residential projects using mountable curb, gutter, and sidewalks.

2.7 UNPERMITTED ACCESS

Any access, driveway, or curb-cut which is constructed within Public Right-of-Way without a right-of-way permit issued by the Town shall be subject to a "Stop Work" order, and shall be removed immediately. Failure to remove the non-permitted access may result in the removal of said access by the Town, (the cost for removal shall be charged to the property owner). Failure to obey the "Stop Work" order may result in the prosecution of the violators.

CHAPTER 3

PAVEMENT DESIGN AND TECHNICAL CRITERIA

TABLE OF CONTENTS

Section	Title	Page
3.1	General	3.1
3.2	Subgrade Investigation	3.3
3.3	Pavement Design Criteria	3.6
3.4	Pavement Design Procedure	3.9
3.5	Subgrade Investigation and Pavement Design Report	3.12

TOWN OF SUPERIOR

CHAPTER 3
PAVEMENT DESIGN AND TECHNICAL CRITERIA

3.1 GENERAL

3.1.1 This chapter provides the basic criteria and design procedures for roadway pavements. Required design methodologies for asphalt and Portland cement concrete are addressed and essentially follow the Colorado Department of Transportation (CDOT) methodology. Subgrade stabilization methods using flyash or lime stabilization shall follow *CDOT Road and Bridge Standards Section 307* and MGPEC Volume 1, Item 5, Part 1 specifications.

3.1.2 PAVEMENT DESIGN REPORT SUBMITTAL OPTIONS

There are two acceptable submittal options for pavement design geotechnical reports related to the final construction plans.

3.1.2.1 OPTION 1 The final pavement design may be completed concurrent with the final construction plans, with the pavement section dimensions and pavement material and construction specifications included in the final construction plan submittal. All soil samples for the pavement design must be taken after overlot grading has been completed, sanitary and storm sewers have been installed, and the roadway subgrade is within one foot of final grade.

3.1.2.2 OPTION 2 The final pavement design may be completed and submitted after Town Board approval of the associated street plan, profile, and drainage final construction plans. Pavement design shall occur prior to any paving and after overlot grading (to within one foot of final roadway grades) and installation of sanitary and storm sewers.

If the first option is chosen, the Developer may obtain all necessary construction permits when the final construction plans are approved by the Town Engineer. If the second option is used, the Developer may obtain pavement construction permits only after the final construction plans, which include the pavement design, are approved by the Town Engineer. If the second option is used, the application for pavement design approval must be in accordance with this chapter.

3.1.2.3 If a street is to be built in phases (i.e., the center two lanes are built first, then at some later date more lanes are added), a new pavement design investigation and report for the additional lanes will be required if it has been at least two years since the original design was completed.

3.1.3 PRELIMINARY PAVEMENT DESIGN REPORTS

For all Town land development approvals that involve a subdivision improvements agreement for roadway construction, upon the request by the Town Engineer, the Developer must provide, at minimum, a preliminary subgrade investigation and pavement design report that recommends typical pavement structural section based on the known site soil conditions and the valid Traffic Impact Analysis. The preliminary reports shall use the Equivalent (18 kip) Single Axle Load Applications (ESAL) of Table 3.2. This preliminary pavement design serves as a justification of the roadway improvement costs included in the Subdivision Improvements Agreement or Public Improvements Agreement.

A preliminary pavement design may be submitted with final construction plans for Developers using submittal Option 2 in Section 3.1.2.

The following list is required for subgrade investigation and pavement design.

- Vicinity Map
- Drawing with location of borings
- Drawing with location of soil types and ESAL values (See Table 3.2)
- Drawings with pavement alternatives
- Atterberg limits & percent passing No. 200 sieves
- Correct soil classification
- For composite samples: Correctly grouped at 250 foot maximum intervals
- For CBR testing:
    - Moisture/density curves
    - Stress-strain curves of CBR's shown
    - Surcharge weights (correct unit weights, intensity of loading equal to mass of pavement design ± 5 lbs.
    - Percentage of swell on stress-strain curves
    - Moisture content and dry density for each sample
- For R-Value Testing:
    - Dry density and moisture content for each sample
    - Expansion pressure for each sample
    - Exudation pressure - R-value curve
- For Mr testing:
    - Moisture/density curves
    - Moisture content and dry density of each sample
    - Did sample reach 5% vertical permanent strain?
    - Chamber confining pressure
    - Nominal axial cyclic stress

- Applied loads, recoverable axial deformation, axial strain, and resilient modulus for last 5 load cycles

- Design nomography shown with correct soil support and ESAL
- Correct design coefficient used for asphalt, base course, etc. (See Table 3.5)
- Design calculations shown for all phases of soil report
- Minimum pavement sections met for proper classification (See Table 3.4)
- Special problems (expansions, frost heave, groundwater) with design and construction problems.
- If the Denver/Colorado/Consolidation test shows over 1.50% swell, proposed mitigative measures acceptable to Town Engineer.

3.2 SUBGRADE INVESTIGATION

3.2.1 FIELD INVESTIGATION

The field investigation shall consist of borings or other suitable methods of sampling subgrade soils to a depth of at least five (5) feet below proposed subgrade elevation (10 feet below proposed subgrade on arterial roadways), at spacings of not more than 250 feet, unless otherwise accepted by the Town Engineer. Every fifth hole shall be ten (10) feet deep. Samples shall be taken after grading is completed and the subgrade is rough cut (± 1 foot).

3.2.2 CLASSIFICATION TESTING

Each subgrade sample shall be tested to determine Liquid Limit, Plastic Limit, Plasticity Index, Atterberg Limits and the percentage passing the U.S. Standard No. 200 sieve.

Samples of sands and gravels may require gradation analysis for classification determination. These data shall be determined using the following methods:

Liquid Limit - AASHTO T89 (ASTM D4318)
Plastic Limit - AASHTO T90 (ASTM D4318)
% Passing No. 200 - AASHTO T11 (ASTM C117)
Gradation - AASHTO T27 (ASTM D422)

The results of these tests shall be used to calculate the AASHTO Classification and Group Index using AASHTO M 145.

3.2.3 SOIL GROUPING

To facilitate subgrade support testing, soil samples collected in the field investigation can be combined to form soil groups. These groups shall be based upon the AASHTO Classification, Group Index, and location within the area

investigated. Groupings shall not consist of samples with different AASHTO Classifications. (Note: there may be more than one group within a given classification). Composite samples can be manufactured by combining small portions of each subgrade sample contained within the group and mixing to provide a uniform composite sample of the soil group. Composite samples shall be subjected to Classification Testing as outlined in Item 3.2.2.

3.2.4 SUBGRADE SUPPORT TESTING

Individual subgrade or composite samples shall be tested to determine the subgrade support value using either California Bearing Ratio CBR, Hveem Stabilometer (R-value), or dynamic Resilient Modulus (Mr) testing. These values shall be used in the design of pavement sections in accordance with the procedures outlined in Section 3.4. Tests shall be conducted in accordance with the procedures listed below in items 3.2.4.1 or 3.2.4.2.

3.2.4.1 CBR Tests: California Bearing Ratio tests shall be conducted in accord with AASHTO T193 with the following modifications:

a. Note 4 of AASHTO T 193 shall not apply. A 3 point CBR evaluation is required.

b. The requirement for compaction shall be in accordance with the most recent edition of the *CDOT Road and Bridge Standards and Specifications*.

c. Surcharge shall be calculated using a unit weight of 140 pcf for Bituminous pavement, and 135 pcf for untreated aggregate base course.

d. The design CBR Value shall be determined from the CBR – Dry Density Curve and shall be the CBR value at 95 percent compaction. If the CBR is less than 6 in the upper 2 feet of subgrade, then the subgrade must be stabilized with either fly ash or lime. Subgrade stabilization methods using flyash or lime stabilization shall follow CDOT Road and Bridge Standards Section 307 MGPEC Volume 1, Item 5, Part 1 specifications.

e. In addition to the values requested in AASHTO T 193, Stress Penetration curves for each sample, a CBR - Dry Density curve and Proctor Compaction test results shall be reported.

3.2.4.2 **R-Value Tests:** Hveem Stabilometer tests shall be conducted in accordance with AASHTO T 190. The design R-value shall be at 300 psi exudation pressure. The reported data shall consist of:

a. Dry density and moisture content for each sample
b. Expansion pressure for each sample.
c. Exudation Pressure - corrected R-value curve showing the 300 psi design R-value.
d. If the R-value is less than 15 in the upper 2 feet of subgrade, then the subgrade must be stabilized with either fly ash or lime. Subgrade stabilization methods using flyash or lime stabilization shall follow CDOT Road and Bridge Standards Section 307 MGPEC Volume 1, Item 5, Part 1 specifications.

3.2.4.3 **Mr Tests:** Dynamic Reslient Modulus test shall be conducted in accordance with AASHTO T307. If the Mr is less than 4,000 psf in the upper 2 feet of Subgrade, then the subgrade shall be stabilized with either fly ash or lime. Subgrade stabilization methods using flyash or lime stabilization shall follow CDOT Road and Bridge Standards Section 307 MGPEC Volume 1, Item 5, Part 1 specifications.

3.2.4.3 **Swell Test:** A Colorado Swell Test (also referred to as the Denver Swell Test or Swell Consolidation Test), shall be required in all pavement design reports. The swell tests shall be conducted on samples collected utilizing the modified California sampler and not on remolded samples.

If the swell at an overburden pressure of 150 psf, is 1.5% or greater, the pavement design report must provide mitigating measures to minimize the destructive swell potential. Since the pavement is not placed on the soils until after the soil has been scarified, moisture treated, and compacted to optimum, the "% swell" shall be measured from the point after the overburden pressure is applied, to the point after water is added. In other words, after the overburden pressure is applied and consolidation has occurred, the "swell" = 0.0%, then add water and measure the swell. Mitigation could be overexcavation or recompaction and replacement with suitable non-expansive materials to a depth sufficient to protect the pavement (minimum 2 feet), lime treatment, or other procedures acceptable to the Town Engineer, as recommended and supported by a geotechnical engineer. Moisture treatment, by itself, will not be an adequate mitigating measure. If expansive soil mitigation is made, the soil treatment shall extend to 1 foot behind the back of curb (if detached walk or no walk), or to 1 foot behind the back-of-walk (if attached or monolithic walk).

3.3 PAVEMENT DESIGN CRITERIA

3.3.1 GENERAL

This section provides the parametric input data to be used for the design of pavement of various roadway classifications.

3.3.2 EQUIVALENT (18 KIP) SINGLE AXLE LOADS

The pavement design procedure in this chapter provides for a 20 year service life of pavement, given that normal maintenance is provided to keep roadway surface in an acceptable condition. ESAL and Design Traffic Number (DTN) are also equivalent units, based on a 20 year design criteria and an 18 kip axle loading. All data in this chapter use ESAL units for pavement loading repetitions. ESAL criteria for each Town roadway classification are given in Table 3.2.

TABLE 3.2
RECOMMENDED EQUIVALENT (18 KIP) SINGLE AXLE LOADS (ESAL)

CLASSIFICATION	CLASS MODIFIER	ESAL VALUES [1]
Local/Private/Alley	Residential	
	Serving <80 D.U.'s	36,500
	All Others	73,000
	Commercial [2]	220,000
	Office	730,000
Minor Collector	Residential	220,000
	Commercial [2]	365,000
	Office [2]	1,100,000
Major Collector [2]	Residential	730,000
	Commercial [2]	730,000
	Office [2]	1,100,000
Minor Arterial [2]	All	1,500,000
Major Arterial [2]	All	1,500,000
Entry Street		73,000 (MIN) (ESAL may be required to be 220,000 if number of DU's served is over 100)

Notes: [1] Alternative ESAL values may be considered with justification provided by the Traffic Impact Analysis, proposed land uses, and traffic analysis that defines proportion of truck vehicles.
[2] ESAL shall be calculated based on projected traffic uses. Minimum ESAL values are as prescribed in Table 3.2.

3.3.3 DESIGN SERVICEABILITY

The following criteria shall be used for all Town roadways to be dedicated for public use:

TABLE 3.3
SERVICEABILITY INDEX

ROADWAY CLASSIFICATION	SI
Arterials (minor, major)	2.5
COLLECTORS	
Major	2.5
Minor Commercial/Office	2.5
Minor Residential	2.5
Local	
Residential	2.0
Commercial/Office	2.5
Alleys/private roads	2.0

3.3.4 MINIMUM PAVEMENT SECTION

This section provides the minimum acceptable pavement sections for public roadways in Town. These pavement thicknesses may be used for preliminary planning purposes or for estimating collateral requirements for subdivision improvement agreements. Final pavement designs must be based on actual subgrade support test results.

Hot mixed asphalt (HMA) shall conform to the following:

1. Base lifts to be CDOT Grade SG, (75) PG 64-22, (up to 20% RAP allowed)
2. Intermediate lifts to be CDOT Grade S, (75) PG 64-22, 20% Rap Mix (up to 20% RAP allowed)
3. Top lifts / wearing courses to be CDOT Grade SX, (75) PG 64-22, (Virgin Mix – no RAP allowed)

Table 3.4 lists these minimum thicknesses for each roadway classification.

TABLE 3.4
REQUIRED MINIMUM PAVEMENT SECTIONS

		COMPOSITE SECTION			
CLASSIFICATION	**ESAL**	**ASPHALT (inches)**	**TREATED SUBGRADE (inches)**	**FULL DEPTH ASPHALT (inches)***	**PORTLAND CEMENT CONCRETE (inches)***
Alleys	(Table 3.2)	6.0	12	6.0	5.0
Private Road	(Table 3.2)	6.0	12	6.0	5.0
Local					
Residential	(Table 3.2)	6.0	12	6.0	5.0
Commercial	220,000	6.0	12	8.0	6.0
Office	730,000	6.0	12	9.5	6.0
Minor Collector					
Residential	220,000	6.0	12	8.0	6.0
Commercial	365,000	6.0	12	8.5	6.0
Office	1,100,000	6.5	12	10.0	7.5
Major Collector					
Residential	730,000	6.0	12	9.5	7.0
Commercial	730,000	6.0	12	9.5	7.0
Office	1,100,000	6.5	12	10.0	7.5
Minor Arterial	1,500,000	7.0	12	10.5	8.0
Major Arterial	1,500,000	7.0	12	10.5	8.0

* "Full depth asphalt" and "Portland cement concrete" as listed in this table assumes the subgrade has adequate strength not to require additional treatment.

3.3.5 FLEXIBLE PAVEMENT STRENGTH COEFFICIENTS

Table 3.5 contains the standard design coefficients for various pavement materials. Nonstandard design coefficients may be used, only if approved in advance by the Town Engineer. In addition, design values must be verified by pre-design mix test data and supported by daily construction tests, or, redesign values will be required; i.e., such as - add 1/2 to 1 inch to the in-place surface course of final Asphalt Concrete.

TABLE 3.5
STRENGTH COEFFICIENTS

PAVEMENT STRUCTURE COMPONENT *	STRENGTH COEFFICIENTS	LIMITING TEST CRITERIA
CONVENTIONAL MATERIALS		
Hot Mix Asphalt Pavement	.40	CDOT approved Mix Designs
Existing Hot Mix Asphalt Pavement	.30 .24	9-15 yr >15 yr
Aggregate Base Course	0.10-.12	CDOT Table 3.3
TREATED MATERIALS		
Fly Ash Treated Subgrade	0.11-0.15	CDOT Table 3.2
Lime Treated Subgrade	0.11-0.15	CDOT Table 3.2

* The combination of one or more of the following courses placed on a subgrade to support the traffic load and distribute it to the roadbed.

a. Aggregate Base Course. The layer or layers of specified or selected material of designed thickness placed on a subgrade to support a surface course.

b. Surface Course. One or more layers of a pavement structure designed to accommodate the traffic load, the top layer of which resists skidding, traffic abrasion, and the disintegrating effects of climate. The top layer is sometimes called "Wearing Course".

3.3.6 PORTLAND CEMENT CONCRETE WORKING STRESS (f)

The working stress (f_t) to be used in the design shall be 75% of that provided by third-point beam loading, which shall have a minimum laboratory 28-day strength of 600 psi based on actual tests of materials to be used.

3.4 PAVEMENT DESIGN PROCEDURE

3.4.1 FLEXIBLE PAVEMENTS

The following procedure should be used in determining the Structural Number (SN) of the pavement being designed:

3.4.1.1 Determine roadway classification and corresponding ESAL (Table 3.2)

3.4.1.2 Determine the Serviceability Index (SI) of the roadway classification (Table 3.3)

3.4.1.3 Use a Standard Deviation, So, of 0.44 and a Reliability of 90%.

3.4.1.4 Use a Drainage Coefficient, Cd, of 1.0.

3.4.1.5 Using subgrade CBR, R-value, or Mr test results and ESAL, determine the SN from CDOT Figure 3.1 or DARWin.

3.4.1.6 Once the Structural Number (SN) has been determined, the design thickness of the pavement structure can be determined by the general equation:

$$SN = a_1D_1 + a_2D_2 + a_3D_3 + \ldots$$

Where:

a_1 = Hot Mix Asphalt (HMA) strength coefficients

a_1, a_2, a_n = strength coefficients of additional pavement components

D_1 = thickness of Hot Mix Asphalt (HMA) (inches)

D_2, D_3, D_n = thickness of additional pavement component sections

The strength coefficients for various components of the pavement structure are given in Table 3.5.

The component thickness selected must meet two conditions.

a. Total HMA thickness selected cannot be less than the minimum specified in Table 3.4 for the roadway classification.

b. The base course thickness selected shall be between 1.5 and 2.5 times the HMA thickness selected.

3.4.1.7 The design must reference any mitigation measures required when the Subgrade contains swelling soils (swell potential >1.5% under 150 psf surcharge pressures from a Colorado (Denver) Swell Test); Design reports recommending permeable layers such as untreated aggregate base course in the pavement system, must present the measures to be used to ensure adequate drainage of such layers, and to maintain segregation of the layers from the swelling soils. If expansive soil mitigation is made, the soil treatment shall extend to 1 foot behind the back of curb (if detached walk or no walk), or to 1 foot behind the back-of-walk (if attached or monolithic walk).

3.4.2 RIGID PAVEMENT

The design of rigid pavements is a function of structural quality of the subgrade soil (CBR, R-value or Mr), traffic (ESAL), and the strength of the concrete (Modulus of Rupture). In comparison to the strength of the concrete slab, the structural contributions of underlying layers to the capacity of the pavement are relatively insignificant. Therefore, the use of thick bases or subbases under concrete pavement to achieve greater structural capacity is considered to be uneconomical and is not recommended.

Use the following procedure to obtain required thickness:

3.4.2.1 Determine roadway classification and corresponding ESAL (Table 3.2)

3.4.2.2 Determine design Serviceability Index (SI) of the roadway (Table 3.3)

3.4.2.3 The Modulus of Rupture of the concrete is to be obtained from laboratory tests. For preliminary design, this value shall be assumed to be 650 psi, until laboratory tests have been completed. A Modulus of Elasticity of 3,400,000 psi shall be used unless laboratory testing determines a different value is justified.

3.4.2.4 Use a Standard Deviation, So, of 0.34 and a Reliability of 90%.

3.4.2.5 Chapter 2.6 of the CDOT Pavement Design Manual shall be used to determine the Modulus of Subgrade Reaction, k.

3.4.2.6 If a monolithic or tied curb and gutter are placed on both sides of the pavement use a Load transfer Coefficient, J, of 3.6, otherwise use 4.2.

3.4.2.7 Use a Drainage Coefficient of 1.0

3.4.2.8 Slab thickness shall be determined using Figure 3.7 of *1993 AASHTO Guide for Design of Pavement Structures*, DARWin, or WINPAS 12. CDOT Road and Bridge Standards M-412 shall be followed for joint reinforcement.

3.4.2.9 The design must reference any mitigation measures required when the subgrade contains swelling soils (swell potential >1.5% under 150 psf surcharge pressures from a Colorado (Denver) Swell Test); Design reports recommending permeable layers such as untreated aggregate base course in the pavement system, must present the measures to be used to ensure adequate drainage of such layers, and to maintain segregation of the layers from the swelling soils. If expansive soil mitigation is made, the soil treatment shall extend to 1 foot behind the

back of curb (if detached walk or no walk), or to 1 foot behind the back-of-walk (if attached or monolithic walk).

3.5 SUBGRADE INVESTIGATION AND PAVEMENT DESIGN REPORT

The report shall be prepared by/or under the supervision of/and signed by a Professional Engineer, registered in the State of Colorado, and shall include the following information:

A. Vicinity map to locate the investigated area.

B. Scaled drawings showing the location of borings.

C. Scaled drawings showing the estimated extent of subgrade soil types and ESAL for each street.

D. Pavement design alternative for each street on a scaled drawing.

E. Tabular listing of sample designation, sample depth, Group Number, Liquid Limit, Plasticity Index, percent passing the No. 200 sieve, AASHTO Classification, Group Index, and soil description.

F. CBR,R-value or Mr test results of each soil type used in the design.

G. Pavement design calculations.

H. Design considerations:

A discussion regarding potential subgrade soil problems including, but not limited to:

1. heave or settlement prone soils,
2. frost susceptible soils,
3. groundwater;
4. drainage considerations (surface and subsurface),
5. cold weather construction (if appropriate), and
6. other factors or properties which could affect the design or performance of the Pavement System.

I. Recommendations to alleviate or mitigate the impact of problems discussed in Item H above.

Note: If any new fill material is imported on-site from other areas during the construction phases of a Project, the Town will require a new pavement design report or additional testing to verify the acceptability of this material for roadway fill.

CHAPTER 4

TECHNICAL SPECIFICATIONS

TABLE OF CONTENTS

Section	Title	Page
4.1	32 12 16 – Asphalt Paving	4.1
4.2	32 16 00 – Concrete Curb, Gutter, Sidewalks, and Driveways	4.14
4.3	32 17 23 – Pavement Markings	4.19

SECTION 321216 - ASPHALT PAVING

PART 1 - GENERAL

RELATED DOCUMENTS

A. Drawings and provisions of the Standard Specifications for Road and Bridge Construction, Colorado Department of Transportation and the Town of Superior Roadway Design Criteria and Standards, apply to this Section.

SUMMARY

A. Section Includes:

1. Hot-mix asphalt patching.
2. Hot-mix asphalt paving.
3. Hot-mix asphalt paving overlay.

REFERENCES

A. Standard Specifications for Road and Bridge Construction, Colorado Department of Transportation

B. Roadway Design Criteria and Standards, Town of Superior

DEFINITION

A. Hot-Mix Asphalt Paving Terminology: Refer to ASTM D 8 for definitions of terms.

SUBMITTALS

A. General: Contractor shall submit all mixture designs, certificates, refinery reports, and laboratory data to the Engineer for approval at least 7 days before construction is to begin. The job-mix design may be rejected by the Engineer on the basis of incompleteness, timeliness, or changes in materials. Submittals shall be in a timely fashion such that rejection will not delay completion of the project.

B. Product Data: For each type of product indicated. Include technical data and tested physical and performance properties.

1. Job-Mix Designs: For each job mix proposed for the Work.
    a. Source of Materials.
    b. Gradation, specific gravity, source and description of individual aggregates and the final blend.
    c. Asphalt Cement properties.
    d. Mixing and compaction temperatures used.
    e. Mixture properties determined at a minimum of four asphalt contents and interpolated at optimum and graphs showing mixture properties versus asphalt content.

C. Material Certificates: For each paving material, from manufacturer.

D. Material Test Reports: For each paving material.

QUALITY ASSURANCE

A. Manufacturer Qualifications: A paving-mix manufacturer registered with and approved by authorities having jurisdiction or the DOT of state in which Project is located.

B. Testing Agency Qualifications:

1. Qualified according to ASTM D 3666 for testing indicated.
2. Testing shall be performed, stamped, and signed by a Professional Engineer licensed in Colorado and practicing in asphalt materials design and specification.

C. Regulatory Requirements: Comply with materials, workmanship, and other applicable requirements of Town of Superior and Colorado Department of Transportation for asphalt paving work.

D. Preconstruction Conference: Conduct conference at Project site.

1. Review methods and procedures related to hot-mix asphalt paving including, but not limited to, the following:

    a. Review proposed sources of paving materials, including capabilities and location of plant that will manufacture hot-mix asphalt.
    b. Review condition of subgrade and preparatory work.
    c. Review requirements for protecting paving work, including restriction of traffic during installation period and for remainder of construction period.
    d. Review and finalize construction schedule and verify availability of materials, Installer's personnel, equipment, and facilities needed to make progress and avoid delays.
    e. Review condition and indicate adequateness or inadequateness of work performed under separate contracts within the project site that is within or adjacent to work performed by this contract.

PROJECT CONDITIONS

A. Environmental Limitations: Do not apply asphalt materials if subgrade is wet or excessively damp, if rain is imminent or expected before time required for adequate cure, or if the following conditions are not met:

1. Prime Coat: Minimum surface temperature of 60 deg F and rising.
2. Tack Coat: Minimum surface temperature of 60 deg F and rising.
3. Slurry Coat: Comply with weather limitations in ASTM D 3910.
4. Asphalt Base Course: Minimum surface temperature of 40 deg F and rising at time of placement.
5. Asphalt Surface Course: Minimum surface temperature of 60 deg F and rising at time of placement.

PART 2 - PRODUCTS

AGGREGATES

A. General: Use materials and gradations that have performed satisfactorily in previous installations and are based upon local jurisdictional or DOT design and selection procedures.

B. Coarse Aggregate:

1. ASTM D 692, sound; angular crushed stone, crushed gravel, or cured, crushed blast-furnace slag.
2. CDOT Section 703.

C. Fine Aggregate:

1. AASHTO M 29, sharp-edged natural sand or sand prepared from stone, gravel, cured blast-furnace slag, or combinations thereof.
2. CDOT Section 703.

D. Mineral Filler:

1. AASHTO M 17, rock or slag dust, hydraulic cement, or other inert material.
2. CDOT Section 703.

ASPHALT MATERIALS

A. Asphalt Binder:

1. Shall be in accordance with CDOT Sections 401 and 702.
2. Superpave Performance Graded Binder: Shall be as stated in the bid schedule.

B. Asphalt Cement: Shall be in accordance with CDOT Sections 401 and 702.

C. Prime Coat: Shall be in accordance with CDOT Sections 407 and 702.

D. Tack Coat: Shall be in accordance with CDOT Sections 407 and 702.

E. Fog Seal: Shall be in accordance with CDOT Sections 401 and 702.

F. Water: Potable.

G. Undersealing Asphalt: ASTM D 3141, pumping consistency.

AUXILIARY MATERIALS

A. Herbicide: Commercial chemical for weed control, registered by the EPA. Provide in granular, liquid, or wettable powder form.

B. Sand: AASHTO M 29, Grade Nos. 2 or 3.

C. Paving Geotextile: AASHTO M 288, nonwoven polypropylene; resistant to chemical attack, rot, and mildew; and specifically designed for paving applications.

D. Joint Sealant: Joint sealant shall be in accordance with CDOT 702.06.

MIXES

A. Hot-Mix Asphalt:

1. Shall be in accordance with CDOT Sections 401, 403, 702, and 703.

EQUIPMENT

A. Trucks used for hauling bituminous mixtures shall have tight, clean, smooth metal beds thinly coated with a minimum amount of paraffin oil, lime solution, or other approved release agent. Petroleum distillates such as kerosene or fuel oil will not be permitted. Each truck shall have a cover of canvas or other suitable material to protect the mixture from the weather.

B. Self-propelled asphalt pavers shall be provided and equipped with an activated screed assembly, heated if necessary, capable of spreading and finishing plant mix material in lane widths. The pavers receiving hopper shall have sufficient capacity for a uniform spreading operation and shall have an automatic distribution system that will place the mixture uniformly in front of the screed.

The screed or strike-off assembly shall produce the specified finished surface without tearing, shoving, or gouging the mixture.

The paver shall be capable of operating at forward speeds consistent with uniform and continuous laying of the mixture. Stop and go operations of the paver shall be avoided.

The bituminous paver shall be equipped with a means of preventing the segregation of the coarse aggregate particles from the remainder of the bituminous plant mix when that mix is carried from the paver hopper back to the paver augers. The means and methods used shall be approved by the paver manufacturer and may consist of chain curtains, deflector plates, or other such devices and any combination of these.

Prior to the start of using the paver for placing plant mix, the Contractor shall submit for approval a full description in writing of the means and methodologies that will be used to prevent bituminous paver segregation. Use of the paver shall not commence prior to receiving approval from the Engineer.

C. The paver shall be equipped with automatic screed controls with sensors capable of sensing grade from an outside reference line, and maintaining the screed at the specified longitudinal grade and transverse slope. The sensor shall be constructed so that it will operate from either or both sides of the paver and shall be capable of working with the following devices:
   1. Ski-type device at least 30 feet in length.
   2. Short ski or short shoe.
   3. At least 5,000 feet of control line and stakes.

   The controls shall be capable of maintaining the screed at the specified transverse slope plus or minus 0.1 percent. Manual operation will be permitted for constructing irregularly shaped and minor areas.

D. If the automatic controls fail, the paver may be operated manually for the remainder of the normal working day, provided the specified results are obtained. The variation between any two contacts with the surface shall not exceed 3/16 of an inch in ten (10) feet. Irregularities exceeding the specified tolerance shall be corrected at the Contractor's expense.

   If the Contractor fails to obtain and maintain the specified surface tolerances, the paving operations shall be suspended until satisfactory corrections, repairs, or equipment replacements are made.

E. The asphalt pavement shall be compacted by rolling. Both steel wheel and pneumatic tire rollers shall be required. The number, weight, and type of rollers furnished shall be sufficient to obtain the required density while the mixture is in a workable condition. Compaction shall begin immediately after the mixture is placed and be continuous until the required density is obtained.

PART 3 - EXECUTION

EXAMINATION

A. Verify that subgrade is dry and in suitable condition to begin paving.

B. Proof-roll subgrade below pavements with heavy pneumatic-tired equipment to identify soft pockets and areas of excess yielding. Do not proof-roll wet or saturated subgrades.

1. Completely proof-roll subgrade in one direction with a minimum of two passes. Limit vehicle speed to 3 mph.
2. Proof roll with a loaded 10-wheel, tandem-axle dump truck or water truck using a minimum axle load of 18 Kips per axle.

C. The subgrade shall be proof rolled after the required compaction has been obtained and the subgrade has been shaped to the required cross section and the grade checked.

The proof roller shall be operated in a systematic manner so that a record may be readily kept of the area tested. Areas that are observed to have soft spots in the subgrade, where deflection is not uniform or is excessive as determined by the Engineer, shall be ripped, scarified, dried or wetted as necessary and re-compacted to the requirements for density and moisture at the Contractor's expense. After re-compaction, these areas shall be proof rolled again and all failures again corrected at the Contractor's expense.

Upon approval of the proof rolling, the sub base, base course, or initial pavement course shall be placed within 24 hours. If the Contractor fails to place the sub base, base course, or initial pavement course within 24 hours or the condition of the subgrade changes due to weather or other conditions, proof rolling and correction shall be performed again at the Contractor's expense.

COLD MILLING

A. Shall be in accordance with Division 32 "Cold Milling Asphalt Paving"

1. Temporary Pavement Markings: Temporary pavement markings shall be installed in accordance with Division 32 "Pavement Markings"

FULL DEPTH RECLAMATION (FDR)

A. Shall be in accordance with Division 32 "Full Depth Reclamation"

1. Temporary Pavement Markings: Temporary pavement markings shall be installed in accordance with Division 32 "Pavement Markings"

PATCHING

A. General: Patching shall be in accordance with CDOT Sections 401 and 403.

B. Existing Pavement: Saw cut perimeter of patch parallel and perpendicular to edge of road and excavate existing pavement section to sound base. Excavate rectangular patches, extending 12 inches into adjacent sound pavement, unless otherwise indicated. Cut excavation faces vertically. Remove excavated material.

C. Subgrade:

1. Process and re-compact 12” of existing unbound-aggregate base course to form new subgrade as directed by Engineer.
2. For excavations (within the right-of-way or public utility easements) deeper than 12” below existing asphalt, controlled low strength material (CLSM) conforming to CDOT section 206 shall be used from top of pipe bedding to bottom of asphalt.
3. When possible, proof roll subgrade in accordance with section 3.1.B of this specification.
4. Notify Engineer of unsatisfactory conditions. Do not begin patching until deficient subgrade areas have been corrected and approved by Engineer.

D. Tack Coat: Apply uniformly to vertical surfaces abutting or projecting into new, hot-mix asphalt paving at a rate of 0.05 to 0.15 gal./sq. yd.

1. Allow tack coat to cure undisturbed before applying hot-mix asphalt paving.
2. Avoid smearing or staining adjoining surfaces, appurtenances, and surroundings. Remove spillages and clean affected surfaces.
3. Immediately after finish rolling, and before the asphalt surface temperature drops below 175 degrees, apply tack coat a minimum of 12” either side of the joint to seal the joint. On patches of 40 square feet or less, apply tack coat to the entire surface and extend outside the joint 12 inches onto existing pavement surface.

E. Hot Mix Asphalt:

1. Partially fill excavated pavements with hot-mix asphalt base mix and, while still hot, compact.
2. Cover asphalt base course with compacted, hot-mix surface layer finished flush with adjacent surfaces.
3. Hot mix asphalt shall be placed and compacted in succeeding layers not to exceed 3 inches in depth.

F. Joint Seal: Seal patch joints in accordance with CDOT Section 408.

REPAIRS

A. Crack and Joint Filling: Crack and Joint Sealing shall be performed in accordance with CDOT Section 408.

SURFACE PREPARATION

A. General: Irregularities in the existing pavement or base shall be brought to uniform grade and cross section.

B. Immediately before pavement begins, the pavement surface shall be broomed or otherwise cleaned to provide a dry surface free from loose particles or other deleterious material.

C. Existing Pavement Markings: Completely remove all existing pavement markings prior to any paving operations.

D. Herbicide Treatment: Apply herbicide according to manufacturer's recommended rates and written application instructions. Apply to dry, prepared subgrade or surface of compacted-aggregate base before applying paving materials.

1. Mix herbicide with prime coat if formulated by manufacturer for that purpose.

E. Prime Coat: Apply uniformly over surface of compacted unbound-aggregate base course at a rate of 0.15 to 0.50 gal./sq. yd.. Apply enough material to penetrate and seal but not flood surface. Allow prime coat to cure.

1. If prime coat is not entirely absorbed within 24 hours after application, spread sand over surface to blot excess asphalt. Use enough sand to prevent pickup under traffic. Remove loose sand by sweeping before pavement is placed and after volatiles have evaporated.
2. Protect primed substrate from damage until ready to receive paving.

F. Tack Coat: Tack coat shall be applied between pavement courses, or as ordered by the Engineer or specified in the Contract. Apply uniformly to surfaces of existing pavement at a rate of 0.05 to 0.15 gal./sq. yd.

1. Allow tack coat to cure undisturbed before applying hot-mix asphalt paving.
2. Avoid smearing or staining adjoining surfaces, appurtenances, and surroundings. Remove spillages and clean affected surfaces.

HOT-MIX ASPHALT PLACING

A. Machine place hot-mix asphalt on prepared surface, spread uniformly, and strike off. Place asphalt mix by hand to areas inaccessible to equipment in a manner that prevents segregation of mix. Place each course to required grade, cross section, and thickness when compacted.

1. Place hot-mix asphalt base course in number of lifts and thicknesses indicated.
2. Place hot-mix asphalt surface course in single lift.
3. Revise first subparagraph below to higher temperature if thin lifts in cool weather are likely. See National Asphalt Pavement Association recommendations.
4. Spread mix at minimum temperature of 250 deg F.
5. Begin applying mix along centerline of crown for crowned sections and on high side of one-way slopes unless otherwise indicated.
6. Regulate paver machine speed to obtain smooth, continuous surface free of pulls and tears in asphalt-paving mat.

B. Place paving in consecutive strips not less than a drive lane width unless infill edge strips of a lesser width are required.

1. After first strip has been placed and rolled, place succeeding strips and extend rolling to overlap previous strips. Complete a section of asphalt base course before placing asphalt surface course.

C. Promptly correct surface irregularities in paving course behind paver. Use suitable hand tools to remove excess material forming high spots. Fill depressions with hot-mix asphalt to prevent segregation of mix; use suitable hand tools to smooth surface.

D. The bituminous mixture shall be transported and placed on the roadway without segregation. All segregated areas behind the paver shall be removed immediately upon discovery. The segregated material shall be replaced with specification material before the initial rolling has taken place. If more than 50 square feet of segregated pavement is ordered removed and replaced in any continuous 500 linear feet of paver width laydown, operations shall be discontinued until the source of the segregation has been found and corrected.

If at any time, the Engineer observes segregated areas of pavement, he will notify the Contractor immediately.

Segregated areas in the top lift shall be removed and replaced, full lane width, at the Contractor's expense. The Engineer may approve a method equivalent to remove and replace that results in a non-segregated top lift. Segregated areas in lifts below the top lift, that are smaller than 50 square feet per 100 linear feet of lane width, will be corrected by the Contractor at the Contractor's expense in a manner acceptable to the Engineer. Segregated areas larger than 50 square feet per 100 linear feet of lane width in any lift shall be removed and replaced, full lane width, by the Contractor at the Contractor's expense.

JOINTS

A. Construct joints to ensure a continuous bond between adjoining paving sections. Construct joints free of depressions, with same texture and smoothness as other sections of hot-mix asphalt course.

In every pavement layer, the joints shall not be constructed in the wheel paths. The Contractor shall submit a longitudinal joint and pavement marking plan three days prior to the Pre-Paving Conference. The plan shall show the location and configuration of the proposed longitudinal joints and pavement markings, and shall detail the methods to be used to field establish a control line. The Contractor shall use a continuous string line to delineate every longitudinal joint during paving operations. All exposed string line shall be picked up and disposed of at the end of each day's paving. Paving shall not commence until the plan has been approved in writing by the Engineer.

1. Clean contact surfaces and apply tack coat to joints.
2. Offset longitudinal joints, in successive courses, a minimum of 6 inches.
3. Offset transverse joints, in successive courses, a minimum of 24 inches.
4. Construct transverse joints at each point where paver ends a day's work and resumes work at a subsequent time. Construct these joints using either "bulkhead" or "papered" method according to AI MS-22, for both "Ending a Lane" and "Resumption of Paving Operations."
5. Compact joints as soon as hot-mix asphalt will bear roller weight without excessive displacement.
6. Compact asphalt at joints to a density within 2 percent of specified course density.

Longitudinal joints shall not cross the centerline, lane line, or edge line unless approved by the Engineer.

COMPACTION

A. The hot mix asphalt shall be compacted by rolling. Both steel wheel and pneumatic tire rollers will be required. The number, weight, and type of rollers furnished shall be sufficient to obtain the required density while the mixture is in a workable condition. Compaction shall begin immediately after the mixture is placed and be continuous until the required density is obtained. When the mixture contains unmodified asphalt cement (PG 58-28 or PG 64-22) or modified (PG 58-34), and the surface temperature falls below 185 °F, further compaction effort shall not be applied unless approved. If the mixture contains modified asphalt cement (PG 76-28 or PG 64-28) and the surface temperature falls below 230 °F, further compaction effort shall not be applied unless approved.

B. All roller marks shall be removed with the finish rolling. Use of vibratory rollers with the vibrator on will not be permitted during surface course final rolling and will not be permitted on any rolling on bridge decks covered with waterproofing membrane.

C. Pavement shall be compacted to a density of 92 to 96 percent of the maximum theoretical density, determined according to CDOT CP 51. Field density determinations will be made in accordance with CDOT CP 44 or 81.

D. The longitudinal joints shall be compacted to a target density of 92 to 96 percent of the maximum specific gravity.

E. The Contractor shall obtain one 6 inch diameter core at a random location within each longitudinal joint sampling section for determination of the joint density. The Contractor shall drill the cores at the location directed by the Engineer and in the presence of the Engineer. The Engineer will take possession of the cores for testing.

F. The Contractor may take additional cores at the expense of the Contractor. Coring locations shall be centered on the line where the joint between the two adjacent lifts abut at the surface. Core holes shall be repaired by the Contractor using materials and methods approved by the Engineer.

G. Along forms, curbs, headers, walls, and all other places not accessible to the rollers, the mixture shall be thoroughly compacted with mechanical tampers.

H. Any mixture that becomes loose and broken, mixed with dirt, or is in any way defective, shall be immediately removed and replaced with fresh hot mixture, and compacted to conform with the surrounding area.

I. The Contractor shall construct a compaction pavement test section (CTS) for each job mix for which 1000 or more tons are required for the project. The CTS will be used to evaluate the number of rollers and the most effective combination of rollers and rolling patterns for achieving the specified densities. Factors to be considered include, but are not limited to, the following:

   1. Number, size, and type of rollers
   2. Amplitude, frequency, size and speed of vibratory rollers.
   3. Size, speed, and tire pressure of rubber tire rollers.

4. Temperature of mixture being compacted.
5. Roller patterns.

J. The CTS shall be constructed according to the following procedures:

1. The CTS shall be constructed to provide the nominal layer thickness specified. The first 200 tons of hot mix asphalt on the project location shall constitute the CTS. The production and placement rates of the CTS shall closely approximate the anticipated production and placement rates for the remainder of the Contract.

2. Compaction of the CTS shall commence immediately after the hot mix asphalt has been spread, and shall be continuous and uniform over the entire CTS. For the CTS, compaction shall continue until no discernible increase in density is obtained by additional compactive efforts. All compaction shall be completed before the surface temperature of the mixture drops below 185 °F.

3. Approved types of rollers shall be used to achieve the specified density. The Contractor shall determine what methods and procedures are to be used for the compaction operation. The compaction methods and procedures shall be used uniformly over the entire 200 tons. The Contractor shall record the following information and a copy of this data shall be furnished to the Engineer.

    a. Type, size, amplitude, frequency, and speed of roller.
    b. Tire pressure for rubber tire rollers, and whether the pass for vibratory rollers is vibratory or static.
    c. Surface temperature of mixture behind the laydown machine and subsequent temperatures and densities after each roller pass.
    d. Sequence and distance from laydown machine for each roller, and number of passes of each roller to obtain specified density.

4. Two sets of random cores shall be taken within the 200 tons of the CTS. Each set shall consist of a minimum of seven random corings. The locations of these cores shall be such that one set can serve as a duplicate of the other. One set of these cores shall be immediately submitted to the Engineer. This set will be used for determining acceptance of the CTS and determining density correction factors for nuclear density equipment. Densities of the random samples will be determined by cores according to CDOT CP 44. Density correction factors for nuclear density equipment will be determined according to CDOT CP 81. Coring shall be performed under Engineer's observation. Coring will not be measured and paid for separately but shall be included in the work.

5. The CTS meets requirements if the Quality Level of the random samples is greater than or equal to 75. The Quality Level will be determined according to CDOT CP 71. Once constructed and accepted, the CTS shall remain in place and become part of the hot mix asphalt on the project.

6. When the Quality level is less than 75 the Contractor shall construct an additional test section, utilizing different rollers, or roller positions, or roller patterns as required. A written proposal detailing the changes in methods and procedures that will be used to obtain density is to be submitted to the Engineer for review before constructing the additional test section.

K. Each CTS shall be 200 tons. If in-place densities of the CTS, as determined by nuclear density equipment prior to determining density of the cores, meet the CTS density requirements, the Contractor may begin production paving and continue to place hot mix bituminous pavement under the following conditions:

1. The period during which the Contractor continues to pave without test results from cores shall not exceed one working day.
2. Construction proceeds at the Contractor's risk. If correlation with the cores reveals that the densities do not meet the CTS requirements, the hot mix bituminous pavement placed subsequently will be subject to price reduction or removal and replacement.

L. After production paving work has begun, a new CTS shall be constructed when a change in the compaction process is implemented. A new CTS may be required for different layers of pavement. Each additional CTS shall be constructed as specified herein, and shall be sampled, tested and accepted or rejected as described herein.

INSTALLATION TOLERANCES

A. Pavement Thickness: Compact each course to produce the thickness indicated within the following tolerances:

1. Base Course: Plus or minus 1/2 inch.
2. Surface Course: Plus 1/4 inch, no minus.

B. Pavement Surface Smoothness: Compact each course to produce a surface smoothness within the following tolerances as determined by using a 10-foot straightedge applied transversely or longitudinally to paved areas:

1. Base Course: 1/4 inch.
2. Surface Course: 1/8 inch .
3. Crowned Surfaces: Test with crowned template centered and at right angle to crown. Maximum allowable variance from template is 1/4 inch.

FIELD QUALITY CONTROL

A. Testing Agency: Engage a qualified testing agency to perform tests and inspections.

B. Thickness: In-place compacted thickness of hot-mix asphalt courses will be determined according to ASTM D 3549.

C. Surface Smoothness: Finished surface of each hot-mix asphalt course will be tested for compliance with smoothness tolerances.

D. In-Place Density: Testing agency will take samples of uncompacted paving mixtures and compacted pavement according to AASHTO T 168.

1. Reference maximum theoretical density will be determined by averaging results from four samples of hot-mix asphalt-paving mixture delivered daily to site, prepared according to ASTM D 2041, and compacted according to job-mix specifications.
2. In-place density of compacted pavement will be determined by testing core samples according to ASTM D 1188 or ASTM D 2726.

    a. One core sample will be taken for every 1000 sq. yd. or less of installed pavement, with no fewer than 3 cores taken.
    b. Field density of in-place compacted pavement may also be determined by nuclear method according to ASTM D 2950 and correlated with ASTM D 1188 or ASTM D 2726. Frequency of nuclear density tests shall be a minimum of every 250' per lane mile for each lift of pavement each day.

E. Replace and compact hot-mix asphalt where core tests were taken.

F. Remove and replace or install additional hot-mix asphalt where test results or measurements indicate that it does not comply with specified requirements.

END OF SECTION 321216

SECTION 321600 – CONCRETE CURB, GUTTER, SIDEWALKS, AND DRIVEWAYS

PART 1 - GENERAL

DESCRIPTION OF WORK

A. This item shall consist of the construction of concrete curb, gutter, sidewalks and/or cross pans. Curb, gutter, sidewalk and pan construction as referred to herein or in connection herewith, shall be construed as including any or all of the following described operations:

B. Clearing of the construction site; cutting and/or filling or fine grading and compacting for preparation of subgrade; forming and/or slip-forming; backfilling behind curb, gutters and/or sidewalks; and performing any other similar, incidental or appurtenant operations which may be necessary to properly complete the proper construction of concrete curb, gutter, sidewalks and/or pans.

SCOPE OF WORK

A. The Contractor shall furnish all services, labor, materials, equipment, and perform all operations in connection with all curb, gutter, sidewalk and/or pan construction as awarded to him, together with appurtenances thereto, all as indicated on the plans and as specified herein. The price bid shall include all of the Contractor's costs of whatsoever nature.

STAKING OF LINE AND GRADE

A. The Contractor will provide line and grade stakes for curb and gutter alignment. The curb, gutter, sidewalks and/or pans shall be laid and maintained to the required lines and graded as staked and as shown on the plans.

PERMITS

A. It shall be the responsibility of the Contractor to secure all necessary permits and the cost of said permits shall be included in the applicable prices for the associated work. Such requirements and provisions of the permits, where applicable, shall take precedence and supersede the provisions of these specifications.

OBSTRUCTIONS

A. The Contractor's attention is directed to the possible existence of improvements that may or may not be shown on the plans. All reasonable precautions shall be taken to preserve and protect any improvements, whether shown on the plans or not. Where it is necessary to remove and replace or to relocate such improvements in order to proceed with the work, they shall be removed, maintained in operation and permanently replaced by the Contractor at his expense.

DELIVERY, STORAGE, AND HANDLING

A. Protect all materials from damage during delivery and moisture. Keep geotextile fabric in a dark and dry location.

PART 2 - PRODUCTS

PORTLAND CEMENT CONCRETE

A. Concrete shall be a minimum of 4” thick composed of Type II cement, with 5-8% air entrainment, maximum water to cement ratio of 0.45 and a 28 day compressive strength of 4000 psi.

REINFORCING STEEL

A. Reinforcing steel shall be in accordance to that specified in the Plans.

JOINT FILLER

A. Hot-poured joint sealer material for concrete joints shall conform to the requirements of AASHTO M 173.

PREFORMED EXPANSION JOINT FILLER

A. Premolded parting strips, when called for on the plans, shall be 3/16 inch thick or more and/or the width shown on the plans. They shall consist of strips, which have been formed from layers of felt or shredded felt, cane, wood or other suitable fibers, securely bound together and uniformly impregnated with a suitable binder. They shall be of such character that they will not be permanently deformed by ordinary handling during hot weather or become hard and brittle in cold weather.

PART 3 - EXECUTION

CAST-IN-PLACE CURB, GUTTER, SIDEWALKS AND DRIVEWAYS

A. Excavation

1. Excavation shall be made to the required depth and to a width that will permit the installation and bracing of the forms. The foundation shall be shaped and compacted to a firm even surface conforming to the section shown on the plans or as staked. All soft and yielding material shall be removed and replaced with acceptable material.

B. Forms

1. Steel or wood forms of an approved section shall be used throughout the construction. On radii 3 feet or less, 1/4-inch plywood or masonite shall be used. All forms shall have a height equal to concrete thickness. Built-up, battered, bent, twisted, or broken forms shall be removed from the work. Expansion joint materials shall not be used.
2. Forms shall be so constructed and set as to resist, without springing or settlement, the pressure of the concrete. On curbs of sharp radius, plywood or other approved flexible material shall be used in sections short enough to form a smooth, uninterrupted curb which shall not vary form the true radius by more than 1/4-inch. Forms shall not deviate more than 1/8-inch in 10 feet from the true horizontal alignment and no more than 1/8-inch in vertical alignment.
3. Where forms are set above general surrounding area, earth shall be placed along outside edges of forms to ensure stability.
4. Forms shall be cleaned and oiled each time they are used.
5. Forms must be approved by the Project Representative prior to placing concrete.

C. Mixing and Placing Concrete

1. Concrete shall be proportioned, mixed and placed in accordance with the requirements for the class of concrete specified. Compaction of concrete placed in the forms shall be by vibration of other acceptable method. Form shall be left in place until the concrete has set sufficiently so that they can be removed without injury to the curbing. Upon removal of the forms, the exposed curbing face shall be immediately finished to a uniform surface. For the purpose of matching adjacent concrete finishes or for other reasons, the Engineer shall approve methods of finishing.

D. Sections

1. Curbing shall be constructed in sections having a uniform length of ten feet, unless otherwise ordered. Sections shall be separated by open joints 1/2 inch wide except at expansion joints.

E. Tolerances

1. All surfaces shall be finished within a tolerance of 1/8”.

F. Finishing

1. The surface shall be finished with a wooden or magnesium float. No plastering of the surface will be permitted.
2. All outside edges of the slab and all joints shall be edged with a 1/2 inch radius edging tool.

G. Curb and Gutter Expansion Joints

1. Expansion joints shall be formed at the intervals shown on the plans using preformed expansion joint filler having a thickness of 1/2 inch. When the curb is constructed

adjacent to or on concrete pavement, expansion joints shall be located opposite or at expansion joints in the pavement.

2. Expansion joints shall be installed between concrete curb and any fixed structure, sidewalk or bridge. Expansion joint material shall extend the full depth of contact surface.

H. Sidewalk Joints

1. Expansion joints shall be of the dimensions specified, and shall be filled with the type of preformed expansion joint filler noted. The sidewalk shall be divided into sections by dummy joints formed by a jointing tool or other acceptable means as directed. These dummy joints shall extend into the concrete for at least 2/3 of the depth and shall be approximately 1/2 inch wide.
2. Construction joints shall be formed around all appurtenances such as manholes, utility poles, etc., extending into and through the sidewalk. Performed expansion joint filler 1/2 inch thick shall be installed in these joints. Expansion joint filler of the thickness indicated shall be installed between concrete sidewalks and any fixed structure such as a building or bridge. This expansion joint material shall extend for the full depth of the walk.

I. Curing

1. Immediately upon completion of the finishing, concrete shall be moistened and kept moist for three days, or concrete shall be cured by the use of membrane forming curing compound. The method and details of curing shall be subject to the approval of the Engineer.
2. During the curing period, all traffic, both pedestrian and vehicular, shall be excluded. Vehicular traffic shall be excluded for such additional time as the Engineer may direct.

J. Backfilling

1. After the concrete has set sufficiently, the spaces in back of the curb shall be backfilled to the required elevation with suitable material, which shall be thoroughly tamped in layers not to exceed 6 inches in depth.

CURB AND GUTTER MACHINE

A. General

1. The curb and gutter may be constructed by the use of an automatic curb and gutter forming machine.
2. The automatic curb machine shall meet the following requirements:

   a. The weight of the machine shall be such that compaction is obtained without the machine riding above the bed on which curbing is constructed.
   b. The machine shall form curbing that is uniform in texture, shape and density.
   c. The Engineer may permit the construction of curbing by means other than the automatic curb machine, when short sections or sections with short sections or sections with short radii are required or for such other reasons as warranted. The

resulting curbing shall conform in all respects to the curbing produced by the use of the machine.

REPLACING CURB AND GUTTER

A. Excavation

1. Excavation shall conform to the requirements of subsection 3.01 above.

B. Resetting Curb

1. The curb shall be set on a firm bed with the front top curb line conforming to the required line and grade. All sections of curbing shall be set so that the maximum opening between adjacent sections is not more than 1/2 inch wide for the entire exposed top and face. Any dressing of the ends of the curbing necessary to meet this requirement shall be done by the Contractor.
2. After the curb has been set, the joints shall be completely filled with mortar.

C. Backfilling

1. The spaces in front and back of the curb shall be backfilled to the required elevations with suitable material. This material shall be thoroughly tamped in layers not to exceed 6 inches in depth.

END OF SECTION 321600

SECTION 321723 – PAVEMENT MARKINGS

PART 1 - GENERAL

RELATED DOCUMENTS

A. Drawings and provisions of the Standard Specifications for Road and Bridge Construction, Colorado Department of Transportation apply to this Section.

B. Drawings and provisions of the Manual of Uniform Traffic Control Devices, apply to this Section.

SUMMARY

A. Section Includes:

1. Furnishing all materials, equipment and supplies and providing all labor and supervision required to apply pavement marking material.

B. Related Sections:

1. Division 32 Section "Asphalt Paving"

REFERENCES

A. Standard Specifications for Road and Bridge Construction, Colorado Department of Transportation (CDOT)

B. Manual of Uniform Traffic Control Devices (MUTCD)

SUBMITTALS

A. Shop Drawings: Indicate by legible detailed sketch or computer generated print out pavement markings, lane separations, and defined parking spaces. Indicate, with international symbol of accessibility, spaces allocated for people with disabilities.

1. Each respective pavement marking plan shall include, at a minimum, the existing lane widths, turn-lane taper lengths, turn-lane storage lengths, and any other dimensions deemed necessary for accurate placement.
2. Pavement marking plans shall include all street names within the area of work.
3. Proposed signage shall be in accordance with the latest version of the MUTCD.

B. Material Specifications

C. Installation Methods

QUALITY ASSURANCE

A. Preconstruction Conference: Conduct conference at Project site.

DELIVERY, STORAGE, AND HANDLING

A. Deliver pavement-marking materials to Project site in original packages with seals unbroken and bearing manufacturer's labels containing brand name and type of material, date of manufacture, and directions for storage.

B. Store pavement-marking materials in a clean, dry, protected location within temperature range required by manufacturer. Protect stored materials from direct sunlight.

PROJECT CONDITIONS

A. Traffic: Minimize interference with adjoining roads, streets, walks, and other adjacent occupied or used facilities during milling operations.

1. Do not close or obstruct streets, walks, or other adjacent occupied or used facilities without permission from Owner and authorities having jurisdiction.
2. Provide alternate routes around closed or obstructed traffic ways if required by Owner or authorities having jurisdiction.

B. Pavement Marking Paint and/or Thermoplastic: Proceed with pavement marking only on clean, dry surfaces and at a minimum ambient or surface temperature of 40 deg F for oil-based materials 55 deg F for water-based materials, and not exceeding 95 deg F, unless specified otherwise by manufacturer’s recommendations.

PART 2 - PRODUCTS

MANUFACTURERS

A. Preformed Thermoplastic Pavement Markings

1. Must be on CDOT’s Pre-Approved Manufacturer’s List

B. Epoxy Paint Pavement Markings

1. Must be on CDOT’s Pre-Approved Manufacturer’s List

MATERIALS

A. Dimensions:

1. Lane lines and centerlines shall be 4" wide, white and yellow respectively epoxy paint.
2. Channelizing lines shall be 8" wide, white preformed thermoplastic markings.
3. Stop lines shall be 24" wide, white preformed thermoplastic markings
4. Crosswalks shall be continental style with 24"x 8' lines, white preformed plastic markings

B. Preformed Thermoplastic Markings

1. G*eneral.*

Preformed Thermoplastic markings shall be composed of aggregates, pigments, binders and glass beads, and shall conform to AASHTO designation M 249 with the exception of the relevant differences due to the fact that the material is supplied in a preformed state. The material shall be either alkyd or hydrocarbon based. Only preformed thermoplastic pavement marking material listed on CDOT's approved products list may be used.

2. *Physical Requirements.*

a. Graded Glass Beads. The material shall contain a minimum of 30 percent graded glass beads by weight. The beads shall be clear and transparent. Twenty percent or less shall consist of irregular, fused spheroids, or silica. The refractive index shall be at least 1.50.

b. Pigments. White Sufficient titanium dioxide pigment shall be used to insure a color similar to Federal Highway White, Color Number 17886, conforming to Federal Standard 595. Yellow Sufficient yellow pigment shall be used to insure a color similar to Federal Highway Yellow, Color Number 13655, conforming to Federal Standard 595. The yellow pigment shall be organic and contain no lead chromate.

c. Skid Resistance. The surface of the preformed thermoplastic markings shall provide a minimum resistance value of 45 BPN when tested according to ASTM E 303.

d. Thickness. The material shall be supplied at a minimum thickness of 125 mils.

e. Environmental Resistance. The preformed thermoplastic material shall be resistant to deterioration due to exposure to sunlight, water, oil, gasoline, salt and adverse weather conditions.

C. Epoxy Paint Pavement Markings:

1. Only epoxy pavement marking material that is on CDOT's Approved Products List may be used. Batches or lots of approved products will be accepted on the project by certified test report (CTR). The CTR shall confirm that the material meets all CDOT requirements and is the same material that was preapproved in the product evaluation process.

2. *Formulation.* Epoxy pavement marking material shall be a two component, 100 percent solids, material formulated to provide simple volumetric mixing ratio of two volumes of component A and one volume of component B unless otherwise recommended by the material manufacturer.
3. *Composition.* The component A of both white and yellow shall be within the following limits:

	WHITE:	**YELLOW:**
Pigments	Min % by weight 18% Titanium Dioxide, (ASTM D 476, Type II)	% by weight 21-27%
Epoxy Resin	75-82%	73-79%

The pigment for yellow epoxy shall contain no lead or other material such that the cured epoxy could be considered a hazardous waste under EPA or CDPHE regulations. The Contractor shall submit to the Engineer a manufacturer's certification of compliance with this requirement.

4. *Epoxide Number*. The epoxy number of the epoxy resin shall be 0.38 ± 0.05 as determined by ASTM D 1652 for white and yellow component A on pigment free basis.
5. *Amine Number.* The amine number on the curing agent (component B) shall be 410 ± 50 per ASTM D 2071.
6. *Toxicity.* Upon heating to application temperature, the material shall not produce fumes which are toxic or injurious to persons or property.
7. *Color and Weather Resistance.* The mixed epoxy compound, both white and yellow, when applied to 3 inch x 6 inch aluminum panels at 15 ± ½ mils of thickness with no glass beads and exposed in the Q.U.V. Environmental Testing Chamber as described in ASTM G 154, shall conform to the following minimum requirements. (The test shall be conducted for 75 hours at 122 ºF, 4 hours humidity, and 4 hours U.V., in alternating cycles. The prepared panels shall be cured at 77 º F for 72 hours prior to exposure.) The color of the white epoxy system shall not be darker than Federal Standard No. 595B-17778. The color of the yellow epoxy system shall conform to Federal Standard No. 595B- 13538. The gloss values of both samples shall not be less than 70° after the test.
8. *Drying Time.* The epoxy pavement marking material shall have a setting time to a no-tracking condition of not more than 25 minutes at a temperature of 73 °F and above.
9. *Curing.* The epoxy material shall be capable of fully curing under the constant surface temperature condition of 25 °F and above.
10. *Adhesion to Concrete.* The catalyzed epoxy pavement marking material, when tested according to ACI Method 503, shall have such a high degree of adhesion to the specified (4000 psi minimum) concrete surface that there shall be a 100 percent concrete failure in the performance of this test.
11. *Hardness.* The epoxy pavement marking materials, when tested according to ASTM D 2240, shall have a Shore D Hardness between 75 and 100. Samples shall be allowed to cure at room temperature, 75 ± 2 °F for a minimum of 12 hours and a maximum of 48 hours prior to performing the indicated test.
12. *Abrasion Resistance.* The abrasion resistance shall be evaluated on Taber Abrader with a 1000 gram load and CS-17 wheels. The duration of the test shall be 1000 cycles. The wear index shall be calculated based on ASTM test method C-501 and the wear index for the catalyzed material shall not be more than 70. The tests shall be run on cured samples of material which have been applied at film thickness of 15 ± ½ mils to code S-16

stainless steel plates. The samples shall be allowed to cure at 75 ± 2 °F for a minimum of 48 hours prior to performing the indicated tests.

13. *Tensile Strength.* When tested according to ASTM D 638, the epoxy pavement marking materials shall have a tensile strength of not less than 6000 psi. The Type IV Specimens shall be cast in a suitable mold and pulled at the rate of ¼ inch per minute by a suitable dynamic testing machine. The samples shall be allowed to cure at room temperature (75 ± 2 °F) for a minimum of 12 hours and a maximum of 48 hours prior to performing the indicated tests.
14. *Compressive Strength.* When tested according to ASTM D 695, the catalyzed epoxy pavement marking materials shall have a compressive strength of not less than 12,000 psi. The cast sample shall be conditioned at room temperature, 75 ± 2 °F, for a minimum of 12 hours and a maximum of 48 hours prior to performing the tests. The rate of compression of these samples shall be no more than ¼ inch per minute.

EXECUTION

CONSTRUCTION

A. Sweep and clean surface to eliminate loose material and dust.

B. Temporary Pavement Markings:

1. All pavement markings, except symbols, stop-bars or crosswalks, shall be "tabbed" immediately after removal or immediately after new paving operations for each location identified or as deemed necessary by the Owner.
2. Turning and Through Lanes: Advance warning signs indicating turn and through lanes shall be provided in areas where arrows previously existed until permanent pavement marking is installed.
3. Lane Lines: Shall be "tabbed" intermittently at 40' intervals.
4. It is the Contractor's responsibility to maintain the temporary tabs until permanent pavement marking is installed.

C. Preformed Thermoplastic Pavement Markings

1. Shall be in accordance with CDOT Section 627.09.
2. The markings shall consist of a resilient white or yellow thermoplastic product with glass beads uniformly distributed throughout the entire cross sectional area. Legends and symbols shall be capable of being affixed to bituminous pavements by heating.
3. The markings shall conform to pavement contours, breaks and faults through the action of traffic at normal pavement temperatures. The material shall have resealing characteristics with the capability of fusing with itself and previously applied thermoplastic markings under normal use.
4. The preformed thermoplastic markings shall be packaged in a protective plastic film with cardboard stiffeners where necessary to prevent damage in transit. The carton in which the material is packed shall be clearly labeled for ease of identification.
5. Application temperature shall be as recommended by the manufacturer.

6. The pavement and air temperature shall be as recommended by the manufacturer at the time of application.
7. The materials shall be applied using a heating method recommended by the manufacturer.
8. The Contractor shall provide the Engineer a copy of the manufacturer's installation recommendations prior to beginning the work.
9. The pavement shall be clean, dry and free from debris.
10. The preformed thermoplastic markings may be installed on top of existing thermoplastic markings after all loose material has been removed.
11. The preformed thermoplastic markings shall not be installed on top of existing preformed plastic pavement markings without first removing the existing markings to a depth that insures removal of the adhesive backing of the preformed plastic.
12. It shall not be installed on top of pavement marking paint without first removing the paint.
13. The Contractor shall use a heating method specifically recommended by the manufacturer for the installation of preformed thermoplastic markings.

D. Epoxy Paint Pavement Markings

1. Shall be in accordance with CDOT Section 627.05.
2. The epoxy pavement marking compound shall be applied with equipment that will precisely meter the two components. The equipment shall automatically shut off or warn the operator if one component is not being mixed. The equipment shall produce the required amount of heat at the mixing head and gun tip to provide and maintain the temperatures specified.
3. Before mixing, the individual components A and B shall each be heated to a temperature of 80 to 140 °F. After mixing, the application temperature for the combined material at the gun tip shall be 80 to 140 °F. The 140 °F upper limit is the maximum temperature under any circumstances.
4. Both pavement and air temperatures shall be at least 50 °F at the time of epoxy pavement marking application.
5. The surface areas of new portland cement concrete pavement and decks that are to receive markings shall be sandblasted prior to placement of the epoxy pavement marking. The amount of sandblasting shall be sufficient to remove all dirt, laitance, and curing compound residue.
6. The surface areas of new asphalt pavement, existing asphalt pavement, and existing concrete pavement that are to receive markings shall be cleaned with a high pressure air blast to remove loose material prior to placement of the epoxy pavement marking. Should any pavement become dirty, from tracked mud etc. as determined by the Engineer, it shall be cleaned prior to the placement of the epoxy pavement marking.
7. When recommended by the epoxy manufacturer, a high pressure water blast integrated into the gun carriage shall be used to clean the pavement surface prior to epoxy pavement marking application. The water blast shall be followed by a high pressure air blast to remove all residual water, leaving only a damp surface.
8. Epoxy pavement marking shall be applied to the road surface according to the epoxy manufacturer's recommended methods at 15 mils minimum thickness.
9. Glass beads shall be applied into the epoxy pavement marking by means of a pressurized bead applicator at a rate of ¼ pound per square foot, 25 pounds per gallon minimum.
10. Epoxy pavement marking and beads shall be applied within the following limits:

Application Rate or Coverage
Per Gallon of Epoxy Pavement Marking

	Minimum	**Maximum**
15 mil Marking:	100 sq. ft.	110 sq. ft.
Beads: 25 lbs.		

END OF SECTION 321723

APPENDIX

ROADWAY STANDARDS

Roadway Design Standards

1 …….Intersection Grades
2 …….Intersection Sight Distance
3 …….Alley Section
4 …….Private Street Section
5 …….Local Street Section
6 …….Commercial Office Street Section
7 …….Minor Street Section
8 …….Major Collector Street No Median
9 …….Major Collector With Median
10 …….Minor Arterial Street Section
11 …….Major Arterial 4 Lanes
12 …….Major Arterial 6 Lanes
13 …….Commercial Cul-de-sac
15 …….Local Street Cul-de-sac
16 …….Utility Locations
17 …….Utility Line Locations
18 …….Utility Line Locations
19 …….Curb Drain
20 …….Curb Drain Cleanout
21 …….Curb, Gutter, Sidewalk
22 …….Valley Gutter
23 …….Cross Pan
24 …….Sidewalk
25 …….Raised Pedestrian Walk
26 …….Sidewalk Replacement
27 …….Curb Ramp Notes
28 …….Driveway Cut
29 …….Type 1 Handicap Ramp
30 …….Type 2 Handicap Ramp
31 …….Type 3 Handicap Ramp
32 …….Drainage Chase in Attached Sidewalk
33 …….Sidewalk Chase Detached Walk
34 …….Sidewalk Chase Detached Walk
35 …….Sidewalk Chase Sections
36 …….Curb Opening Inlet (Type R Modified)
42 …….Trench Patch
43 …….Manhole Rim and Cover Adjustment
44 …….Concrete Pavement Joint – Removed, reference CDOT Standards
45 …….Concrete Pavement Joint – Removed, reference CDOT Standards

46 …….Concrete Pavement Joint Notes – Removed, reference CDOT Standards
47 …….Standard Barricade – Removed, reference CDOT Standards
48 …….Standard Median
49 …….Median Planter
50 …….Median Planter
51 …….Signage
52 …….Signage
53 …….Street Name Signage
54 …….Street Name Signage Locations
55 …….Stop or Yield Signage Locations
56 …….Roadway Sections

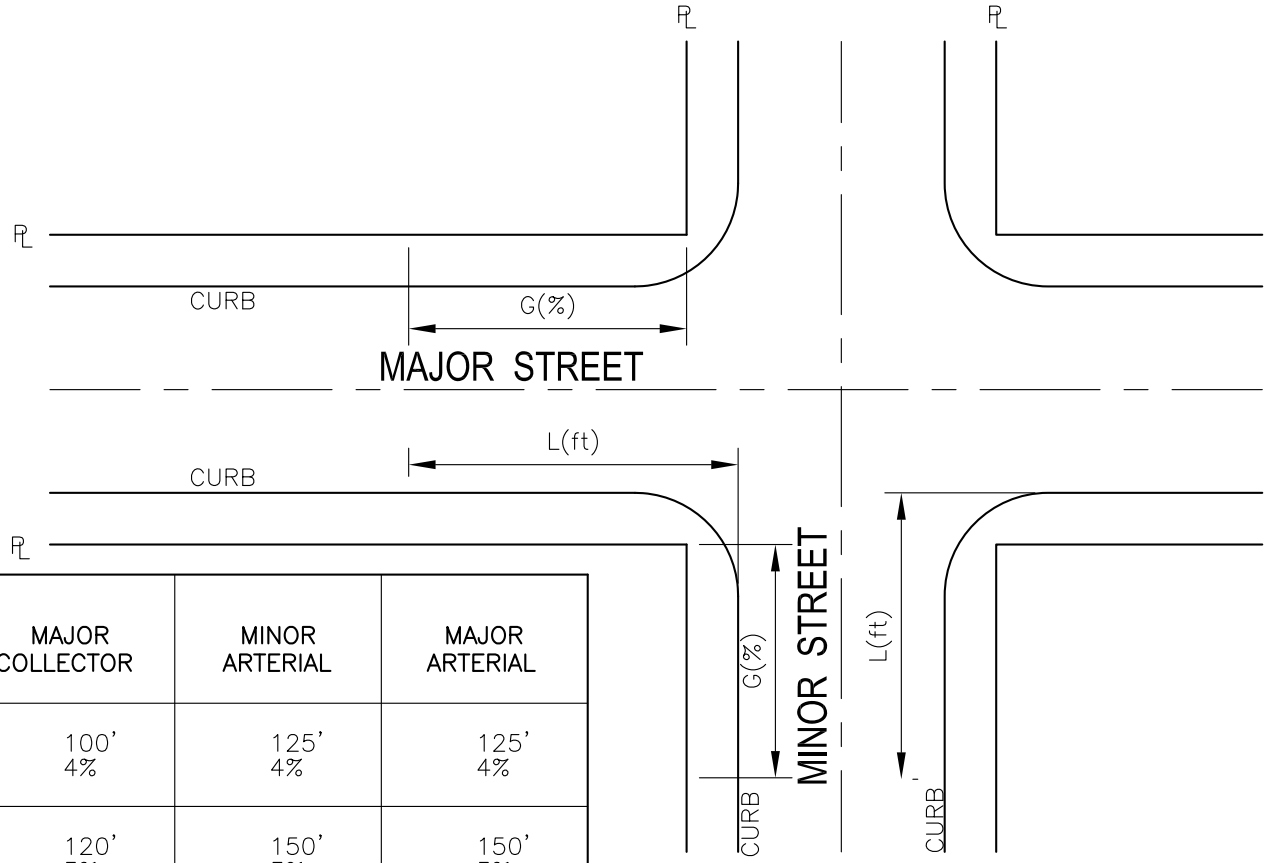

MINOR STREET \ MAJOR STREET	LOCAL	MINOR COLLECTOR	MAJOR COLLECTOR	MINOR ARTERIAL	MAJOR ARTERIAL
LOCAL	95' 4%	100' 4%	100' 4%	125' 4%	125' 4%
MINOR COLLECTOR	– –	100' 4%	120' 3%	150' 3%	150' 3%
MAJOR COLLECTOR	– –	– –	120' 3%	150' 3%	200' 3%
MINOR ARTERIAL	– –	– –	– –	200' 2%	200' 2%
MAJOR ARTERIAL	– –	– –	– –	– –	200' 2%

THE LONGITUDINAL SLOPE OF THE MAJOR STREET SHALL CONTINUE THROUGH THE INTERSECTION AND MAY BE GREATER THAN THE MAX. "G" SHOWN IN THE TABLE EXCEPT AT MAJOR COLLECTORS AND ARTERIALS.

DATE: DEC 2013

Town of Superior
Gateway to Boulder Valley©

ROADWAY DESIGN STANDARDS

FIGURE

PERMISSIBLE INTERSECTION GRADES AND LENGTHS

1

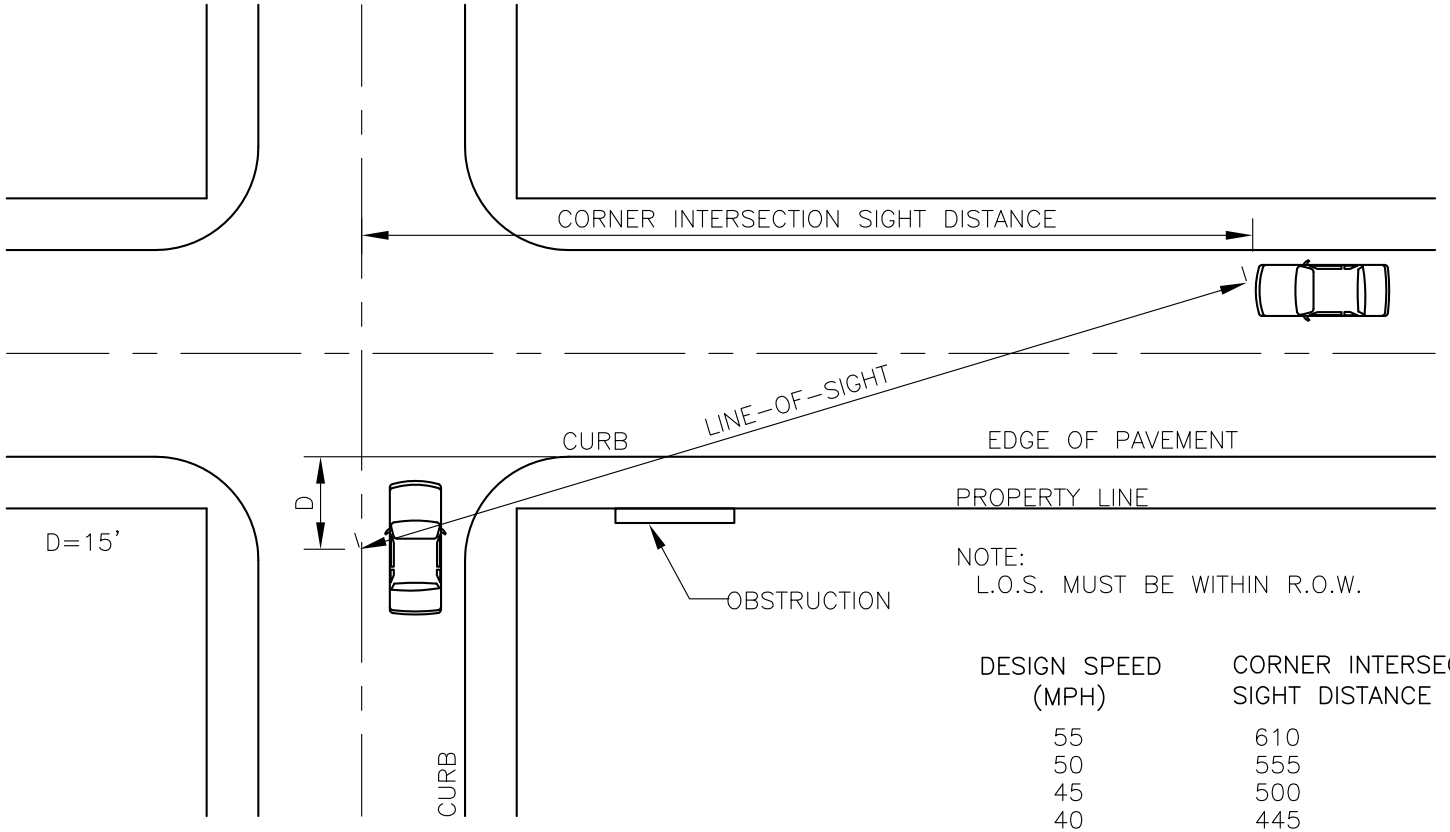

NOTE:
L.O.S. MUST BE WITHIN R.O.W.

DESIGN SPEED (MPH)	CORNER INTERSECTION SIGHT DISTANCE (FT.)*
55	610
50	555
45	500
40	445
35	390
30	335***
25	280***
20	225***

DESIGN INTERSECTION SIGHT DISTANCE
(LEFT TURN FROM STOP)

* CORNER SIGHT DISTANCE MEASURED FROM A POINT ON THE MINOR ROAD AT 15 FEET BACK FROM THE EDGE OF THE MAJOR ROAD PAVEMENT (FLOWLINE) AND MEASURED FROM A HEIGHT OF EYE AT 3.50 FEET ON THE MINOR ROAD TO A HEIGHT OF OBJECT AT 3.50 FEET ON THE MAJOR ROAD.

*** AT LOCAL–LOCAL STREET INTERSECTIONS ONLY, THE "D" DISTANCE SHALL BE TEN FEET (10') AND THE SIGHT DISTANCE SHALL BE MEASURED TO THE CENTERLINE OF THE STREET.

**** FOR PRIVATE DRIVEWAY ACCESS TO A PUBLIC STREET, USE 10 FEET BACK FROM FLOWLINE (OR SHOULDER FOR GRAVEL ROADS.

(AFTER EXHIBIT TABLE 9–55 AASHTO GREEN BOOK 2001)

		DATE: DEC 2013
Town of Superior — Gateway to Boulder Valley©	ROADWAY DESIGN STANDARDS	FIGURE
	INTERSECTION SIGHT DISTANCE REQUIREMENTS	2

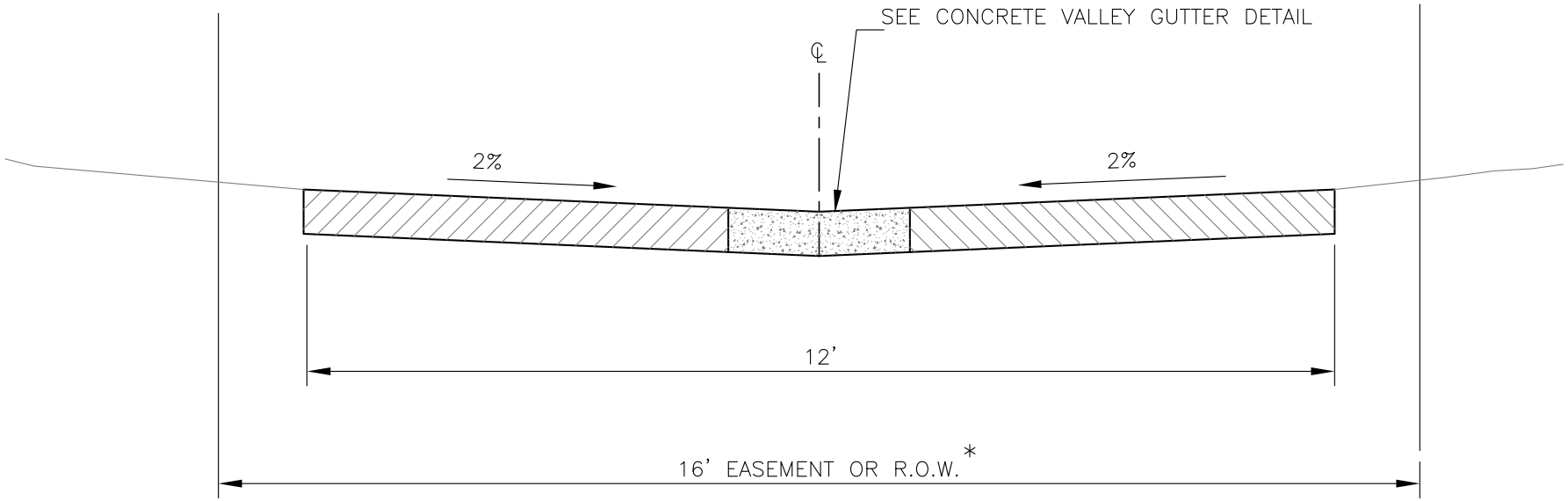

*ADDITIONAL R.O.W. OR EASEMENT WIDTH MAY BE REQUIRED BASED ON UTILITY REQUIREMENTS.

		DATE: DEC 2013
Town of Superior — Gateway to Boulder Valley©	ROADWAY DESIGN STANDARDS	STANDARD DRAWING
	ALLEY SECTION	3

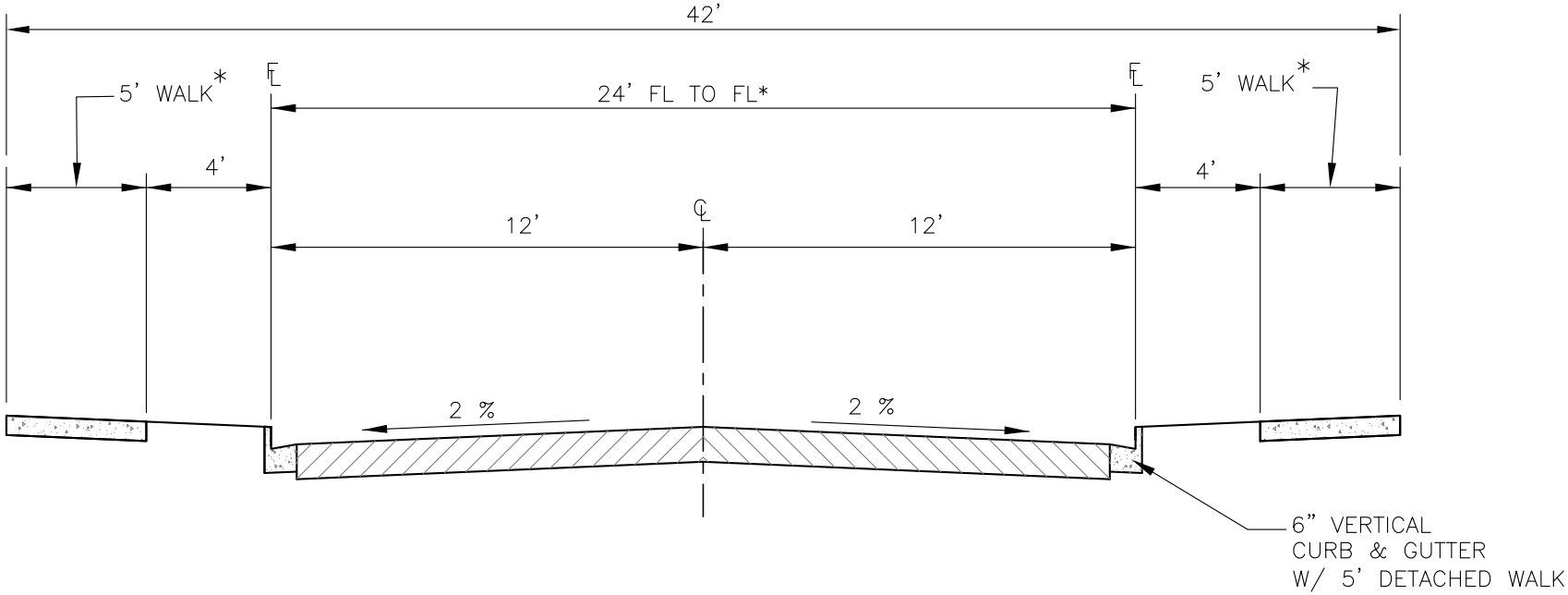

* PAVEMENT WIDTH AND SIDEWALK REQUIREMENTS MAY BE MODIFIED BASED ON ACCESS NEEDS, PARKING AND TRAFFIC VOLUMES.

		DATE: DEC 2013
Town of Superior — Gateway to Boulder Valley©	ROADWAY DESIGN STANDARDS	STANDARD DRAWING
	PRIVATE STREET SECTION	4

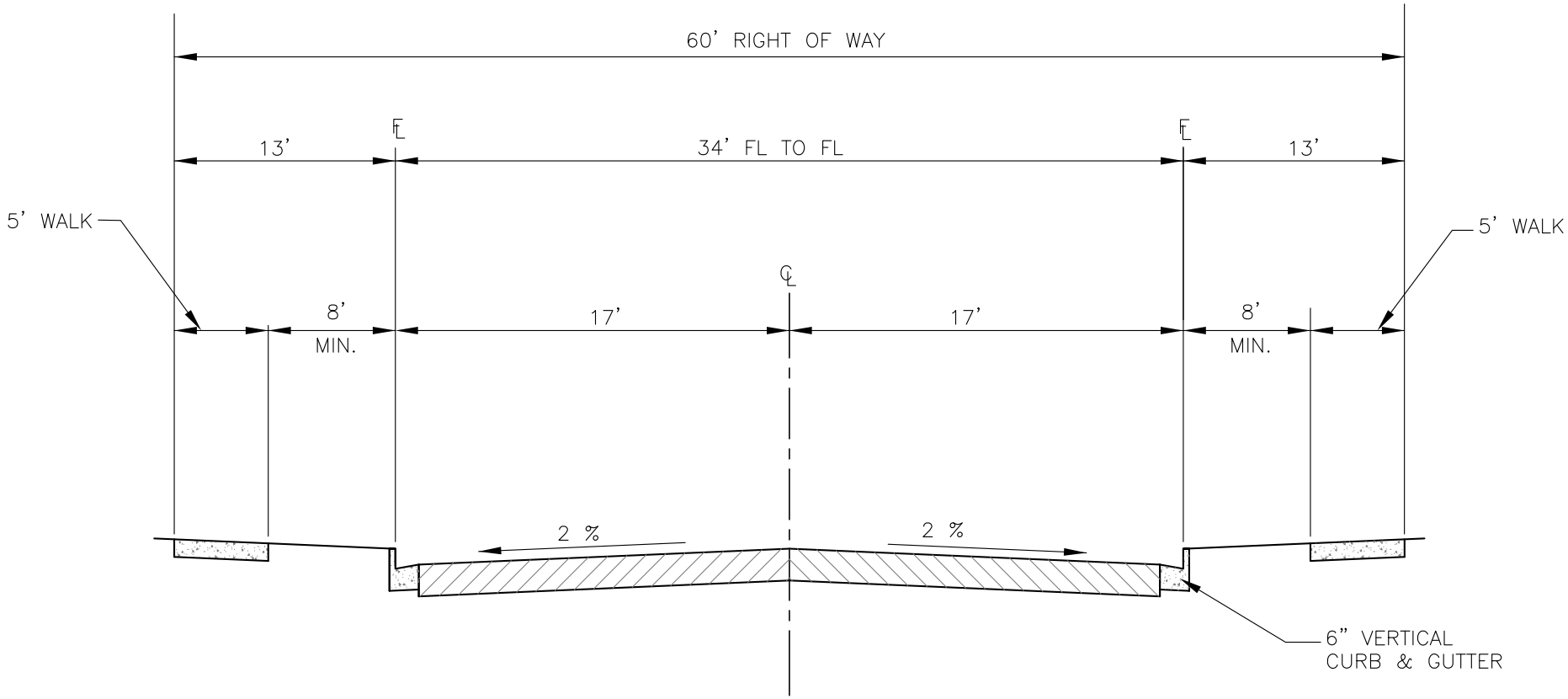

		DATE: DEC 2013
Town of Superior — Gateway to Boulder Valley©	ROADWAY DESIGN STANDARDS	STANDARD DRAWING
	LOCAL STREET SECTION	5

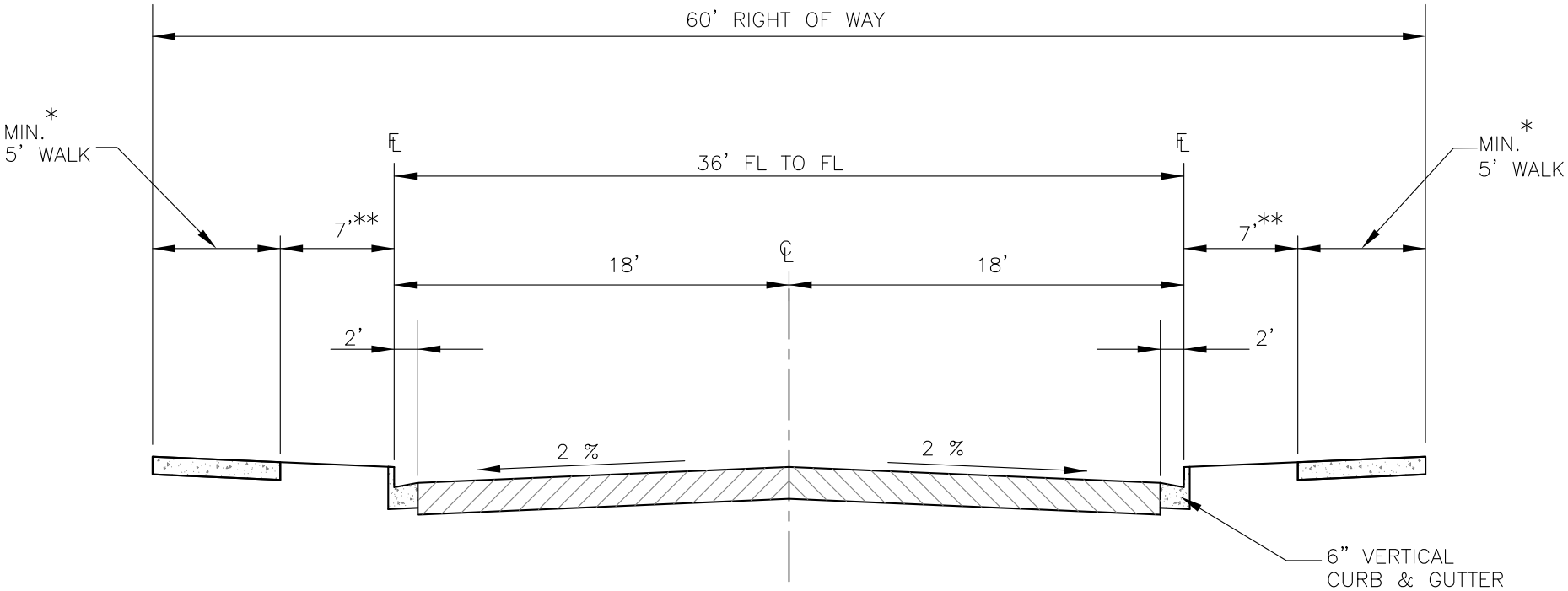

* WIDER WALK MAY BE REQUIRED DEPENDING UPON PEDESTRIAN VOLUMES.
** DIMENSION MAY BE REDUCED FOR WIDER WALK.
*** IN CERTAIN CASES ATTACHED WALK MAY BE ACCEPTABLE BASED ON TOWN ENGINEER'S APPROVAL.

		DATE: DEC 2013
Town of Superior — Gateway to Boulder Valley©	ROADWAY DESIGN STANDARDS	STANDARD DRAWING
	COMMERCIAL/OFFICE STREET SECTION	6

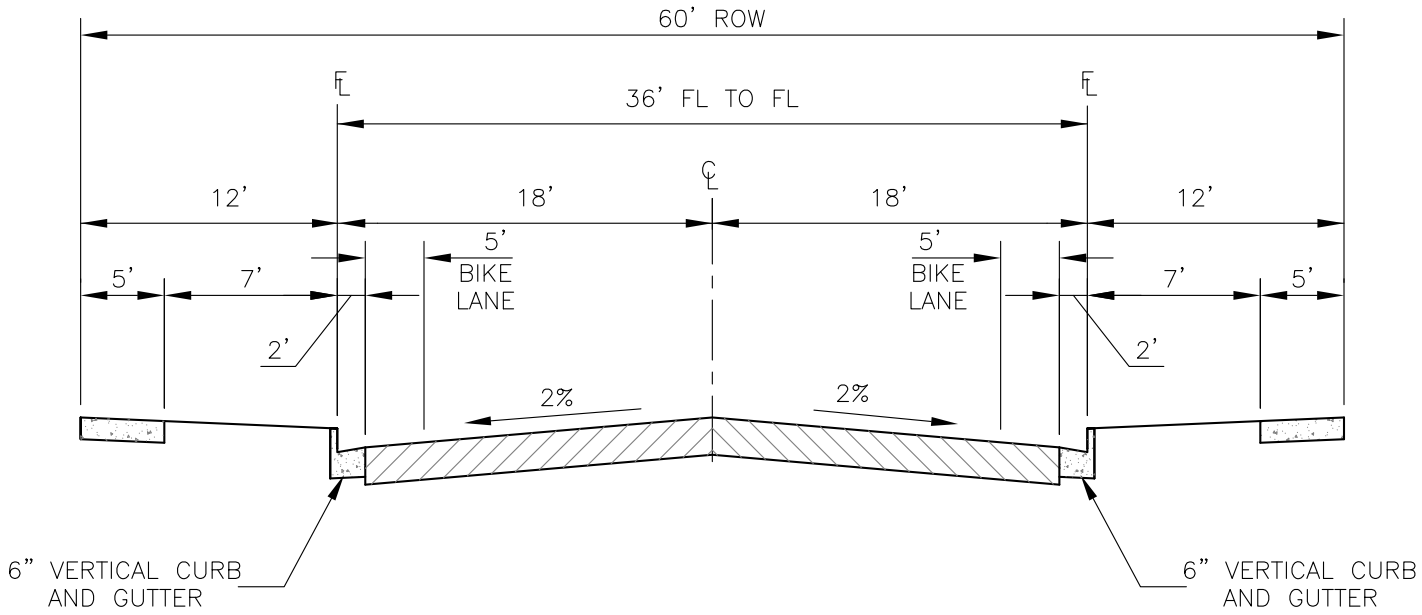

		DATE: DEC 2013
Town of Superior — Gateway to Boulder Valley©	ROADWAY DESIGN STANDARDS	STANDARD DRAWING
	MINOR COLLECTOR STREET SECTION	7

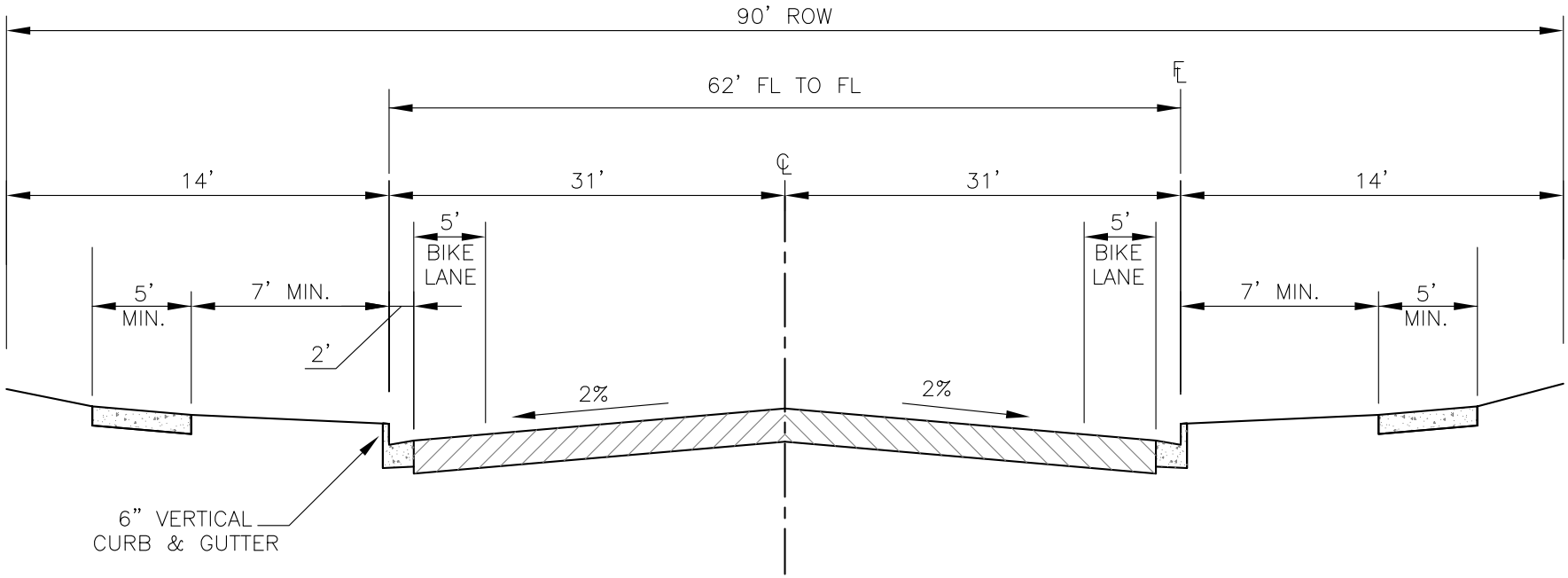

		DATE: DEC 2013
Town of Superior — Gateway to Boulder Valley©	ROADWAY DESIGN STANDARDS	STANDARD DRAWING
	MAJOR COLLECTOR STREET SECTION WITHOUT MEDIAN	8

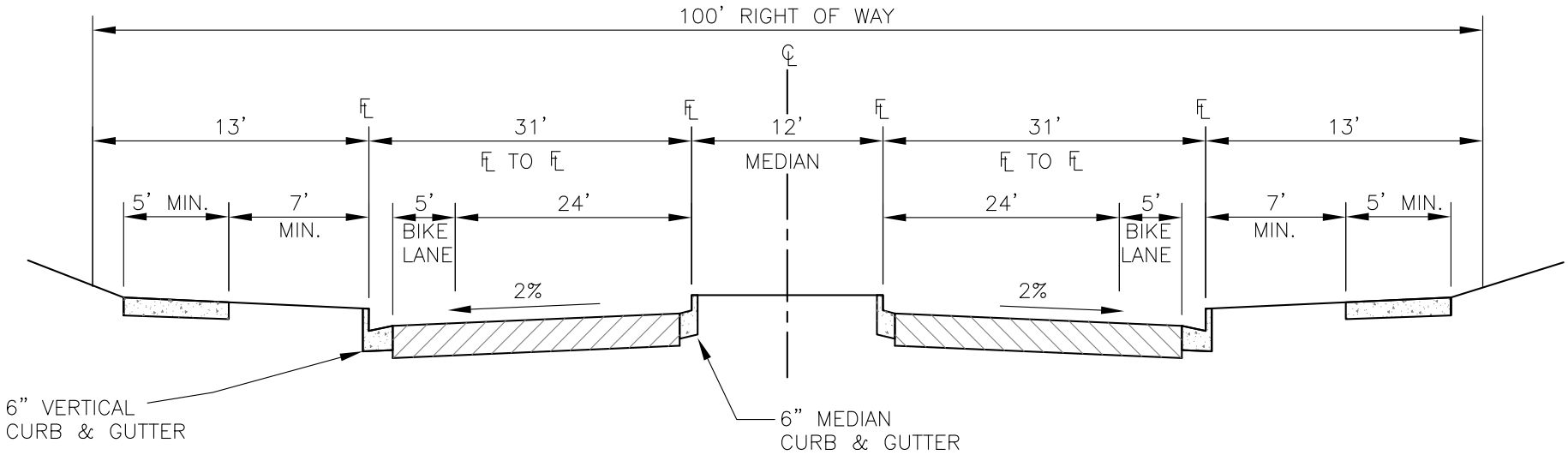

		DATE: DEC 2013
Town of Superior — Gateway to Boulder Valley©	ROADWAY DESIGN STANDARDS	STANDARD DRAWING
	MAJOR COLLECTOR WITH MEDIAN STREET SECTION	9

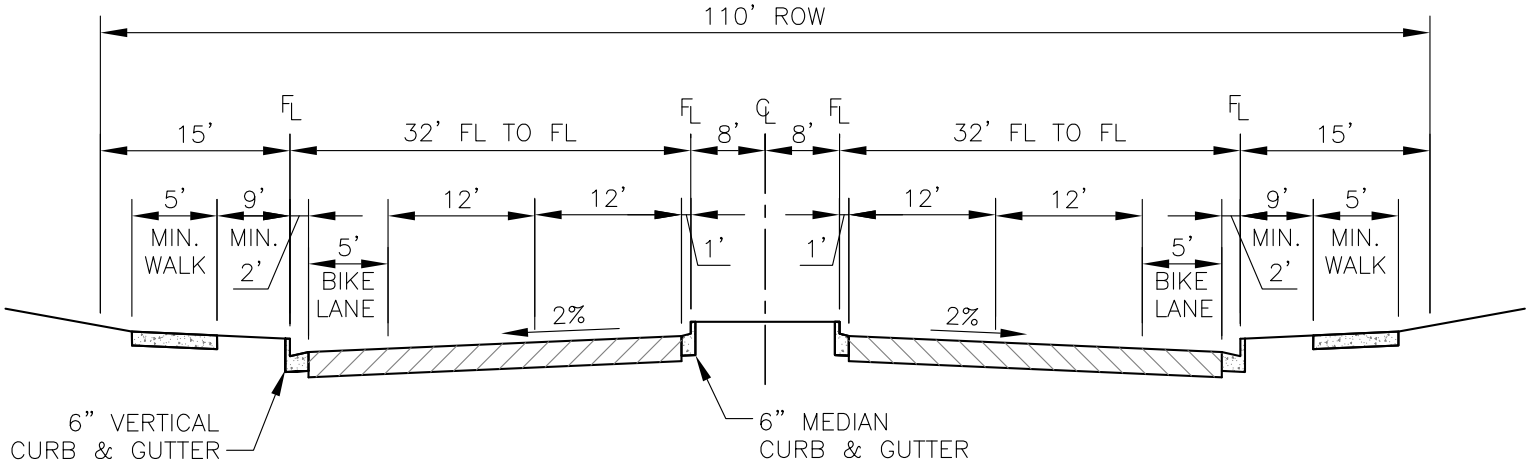

		DATE: DEC 2013
Town of Superior — Gateway to Boulder Valley©	ROADWAY DESIGN STANDARDS	STANDARD DRAWING
	MINOR ARTERIAL STREET SECTION	10

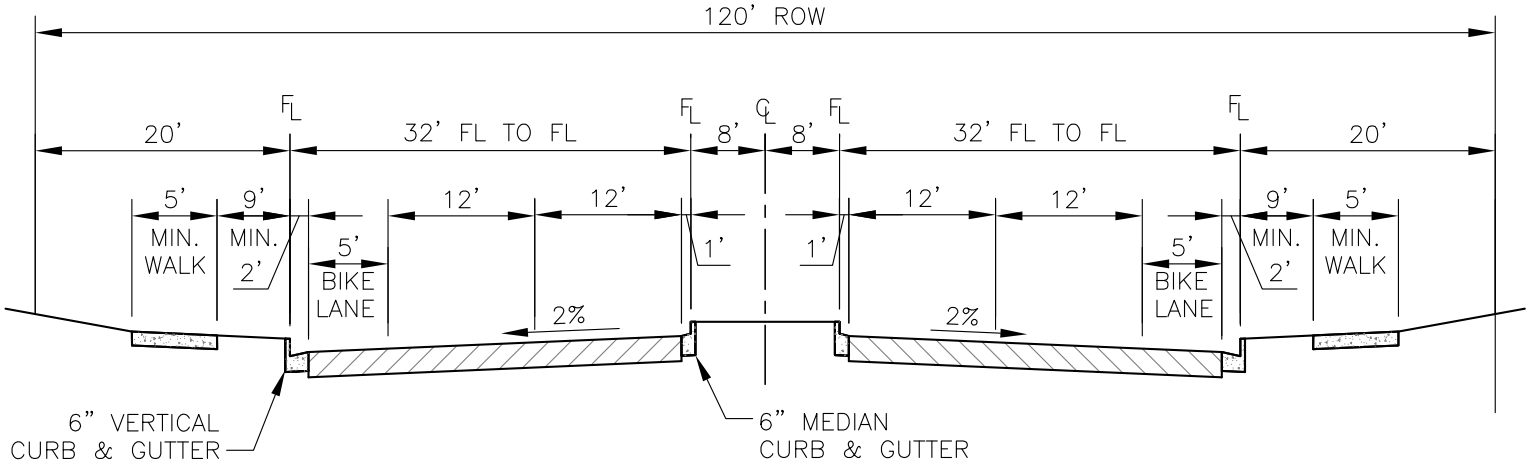

		DATE: DEC 2013
Town of Superior — Gateway to Boulder Valley©	ROADWAY DESIGN STANDARDS	STANDARD DRAWING
	MAJOR ARTERIAL STREET SECTION (4 - LANES)	11

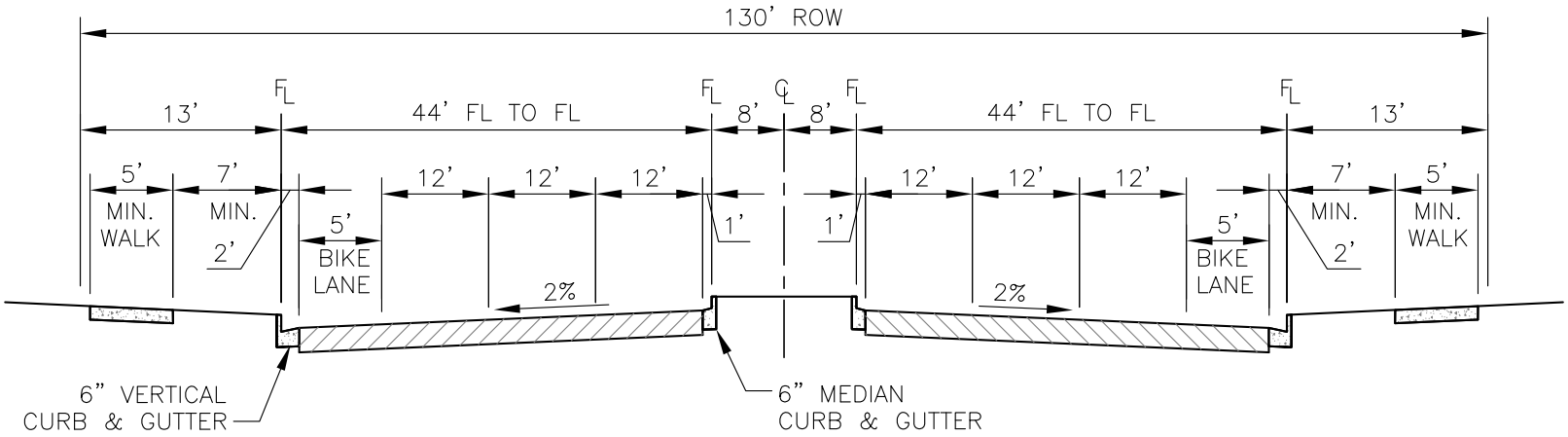

		DATE: DEC 2013
Town of Superior — Gateway to Boulder Valley©	ROADWAY DESIGN STANDARDS	STANDARD DRAWING
	MAJOR ARTERIAL STREET SECTION (6 - LANES)	12

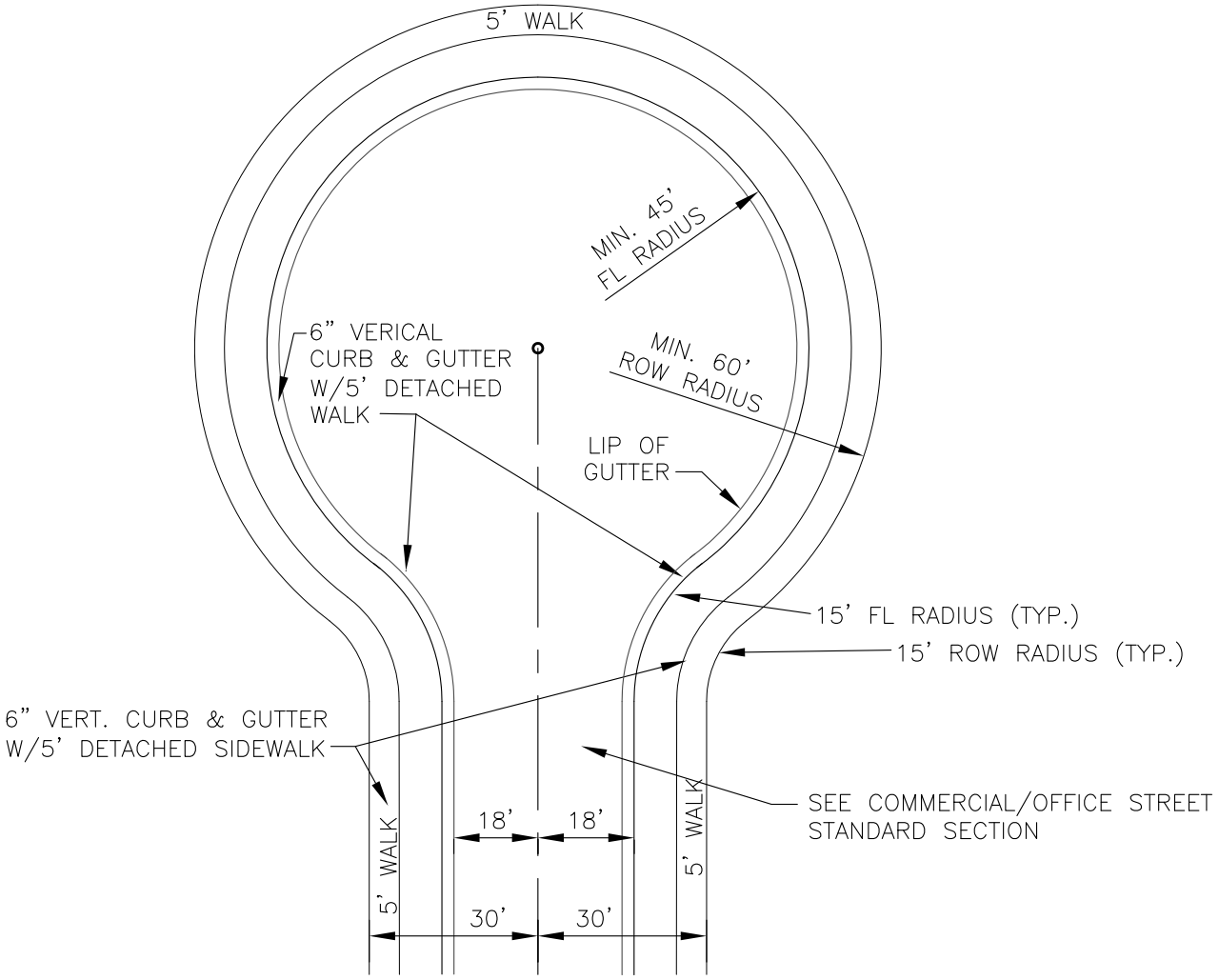

IN COMMERCIAL/OFFICE AREAS REQUIREMENTS FOR CUL-DE-SACS SHALL BE BASED ON TURNING TEMPLATES FOR MAXIMUM EXPECTED TRUCK WHEEL BASE LENGTH.

		DATE: DEC 2013
Town of Superior — Gateway to Boulder Valley©	ROADWAY DESIGN STANDARDS	STANDARD DRAWING
	COMMERCIAL/OFFICE STREET CUL-DE-SAC DETAIL	13

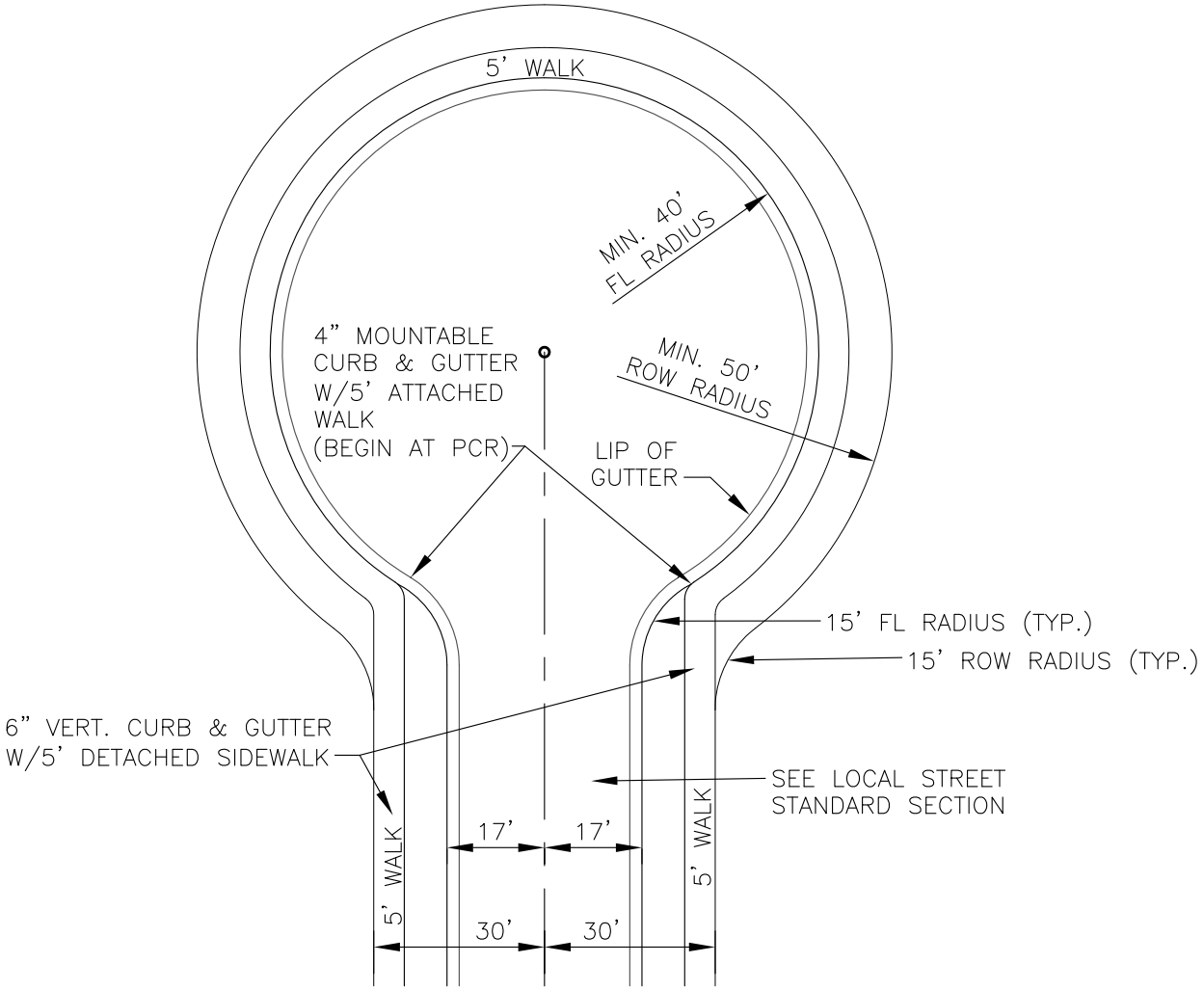

		DATE: DEC 2013
Town of Superior — Gateway to Boulder Valley©	ROADWAY DESIGN STANDARDS	STANDARD DRAWING
	LOCAL STREET CUL-DE-SAC DETAIL	15

NOTE: REFER TO UTILITY STANDARDS FOR REQUIRED HORIZONTAL AND VERTICAL CLEARANCES BETWEEN UTILITIES.

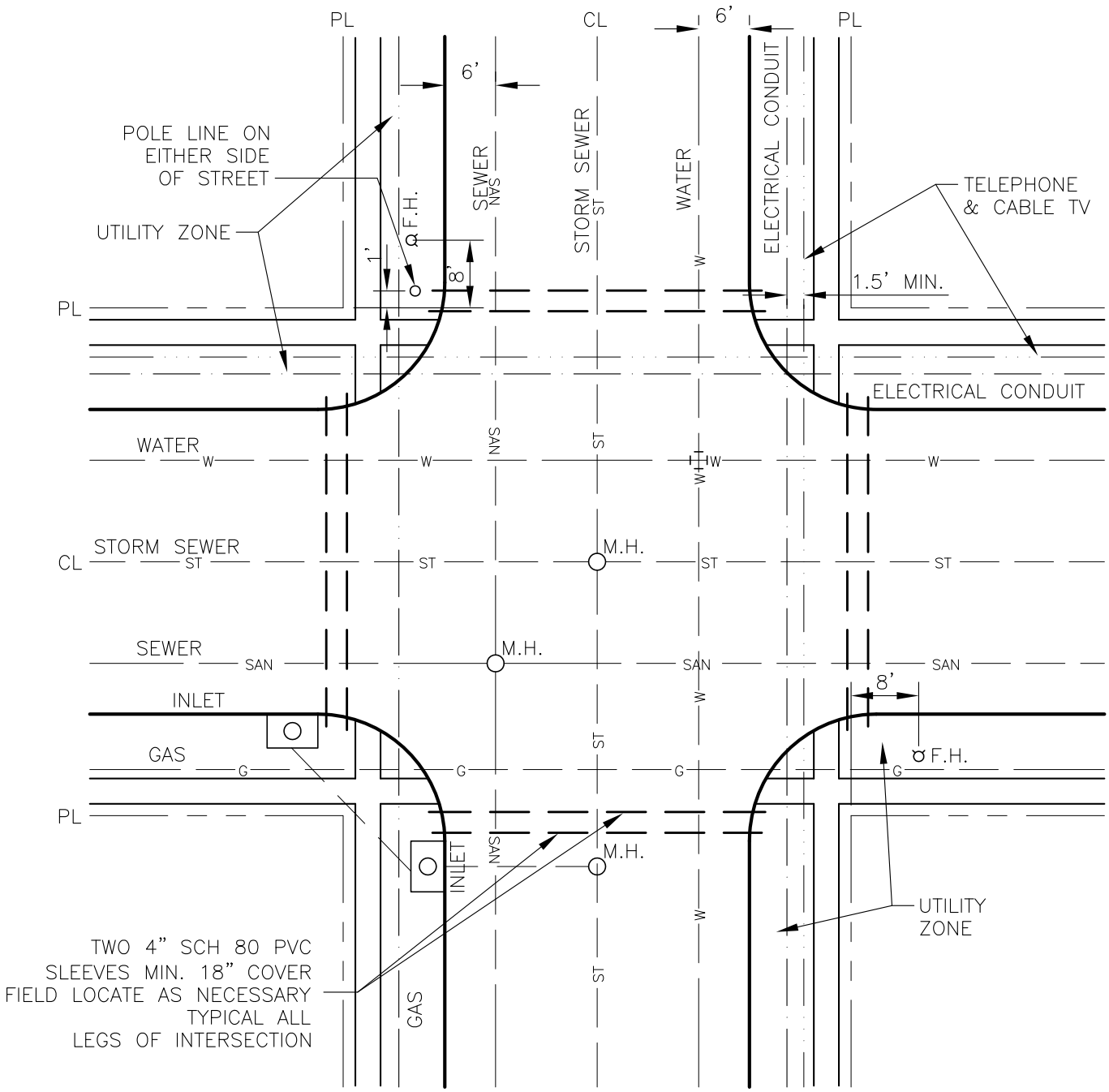

NOTE: THIS STANDARD IS A GUIDELINE ONLY AND DEVIATIONS MAY BE ACCEPTABLE WHERE CONDITIONS DICTATE. DIMENSIONS SHOWN ARE DESIRABLE BUT DO NOT GOVERN. THE INTENTION IS TO SHOW THE RELATIVE POSITION OF ALL UTILITIES. THIS DOES NOT PRECLUDE THE USE OF UTILITIES IN EASEMENTS IN OTHER LOCATIONS (IE. BACK LOT LINES).
LOCATIONS OF RECYCLED WATER LINES TO BE APPROVED BY TOWN ENGINEER.

UTILITY LOCATION - GENERAL

		DATE: DEC 2013
Town of Superior — Gateway to Boulder Valley©	ROADWAY DESIGN STANDARDS	STANDARD DRAWING
	UTILITY LINE LOCATIONS	16

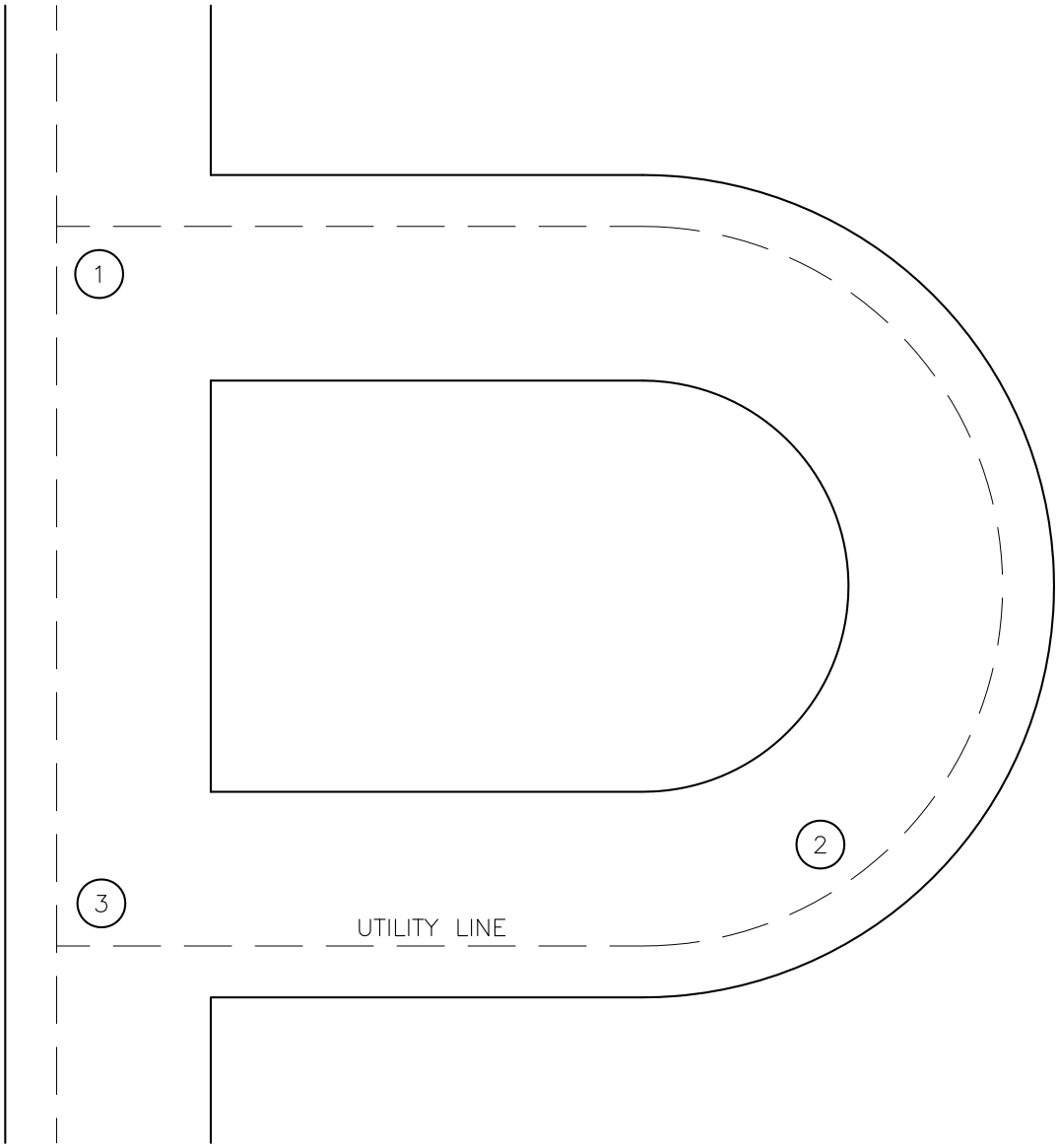

EXAMPLE OF A UTILITY RELOCATION TO A NORMAL POSITION AT AN INTERSECTION.

1. CARRY UTILITY AROUND CORNER.
2. STAY ON SAME SIDE OF STREET.
3. RETURN UTILITY TO NORMAL SIDE OF STREET AT INTERSECTION

UTILITY RELOCATION TO A NORMAL POSITION AT AN INTERSECTION

		DATE: DEC 2013
Town of Superior — Gateway to Boulder Valley©	ROADWAY DESIGN STANDARDS	STANDARD DRAWING
	UTILITY LINE LOCATIONS	17

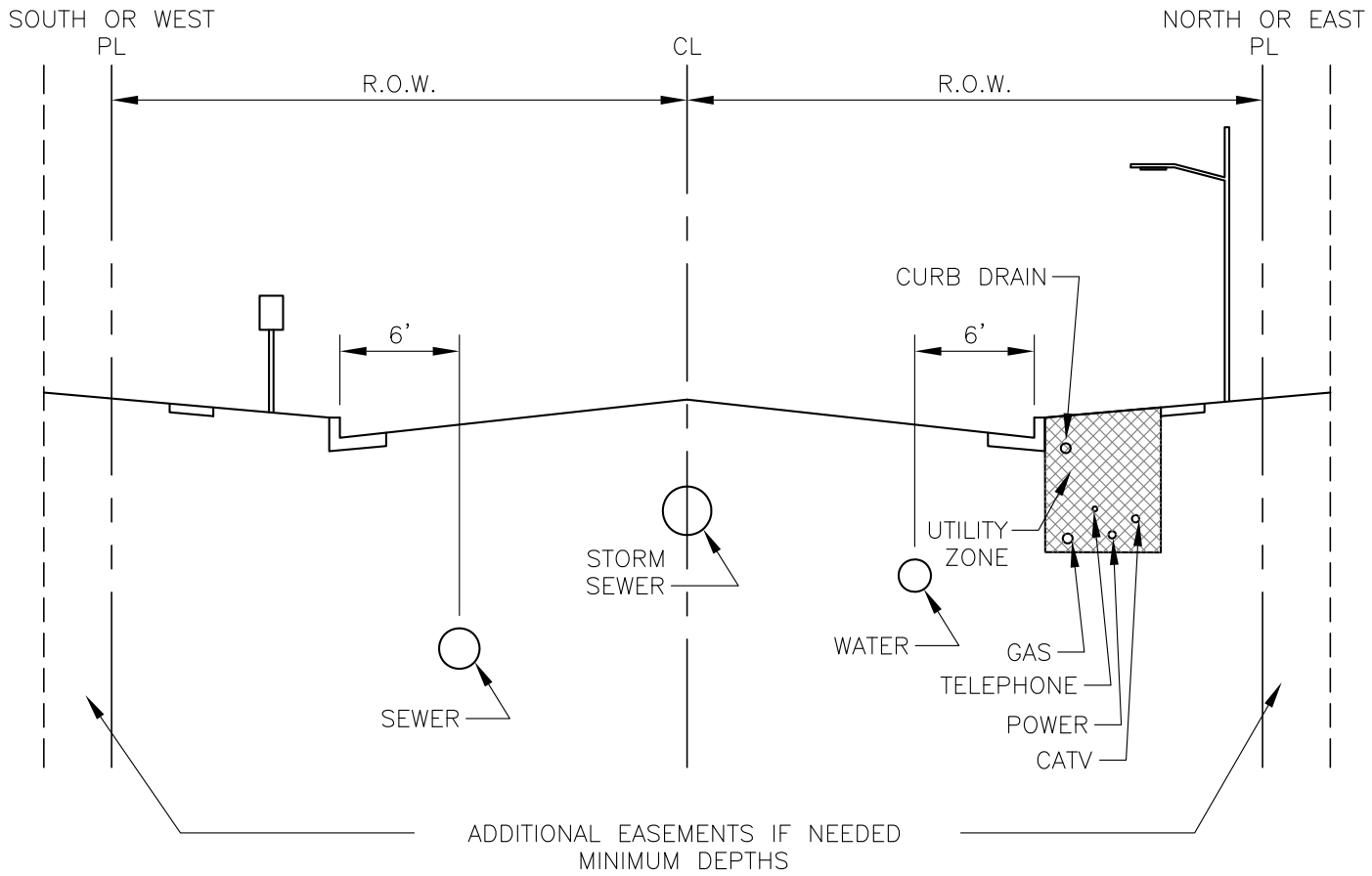

STREET LIGHTS	30"
GAS	30"
TELEPHONE	*
ELECTRIC POWER	*
STORM SEWER	40"
SANITARY SEWER	96"
CATV	24"
POTABLE AND RECYCLED WATER (WITH TRACER TAPED TO PVC, WARNING TAPE 1' ABOVE DIP)	54"
FIBER OPTIC (WITH TRACER WIRE 1' ABOVE THE LINE)	48"
OTHER	30"

NOTE: REFER TO UTILITY STANDARDS FOR REQUIRED HORIZONTAL AND VERTICAL CLEARANCES BETWEEN UTILITIES.

* ELECTRIC AND TELEPHONE LINES PER LATEST ADDITION OF NATIONAL ELECTRIC SAFETY CODE

NOTE: THIS STANDARD IS A GUIDELINE ONLY AND DEVIATIONS MAY BE ACCEPTABLE WHERE CONDITIONS DICTATE. DIMENSIONS SHOWN ARE DISIRABLE BUT DO NOT GOVERN. THE INTENTION IS TO SHOW THE RELATIVE POSITION OF ALL UTILITIES. THIS DOES NOT PRECLUDE THE USE OF UTILITIES IN EASEMENTS IN OTHER LOCATION(IE. BACK LOT LINES).

UTILITY LOCATIONS - GENERAL (VERTICAL)

		DATE: DEC 2013
Town of Superior — Gateway to Boulder Valley©	ROADWAY DESIGN STANDARDS	STANDARD DRAWING
	UTILITY LINE LOCATIONS	18

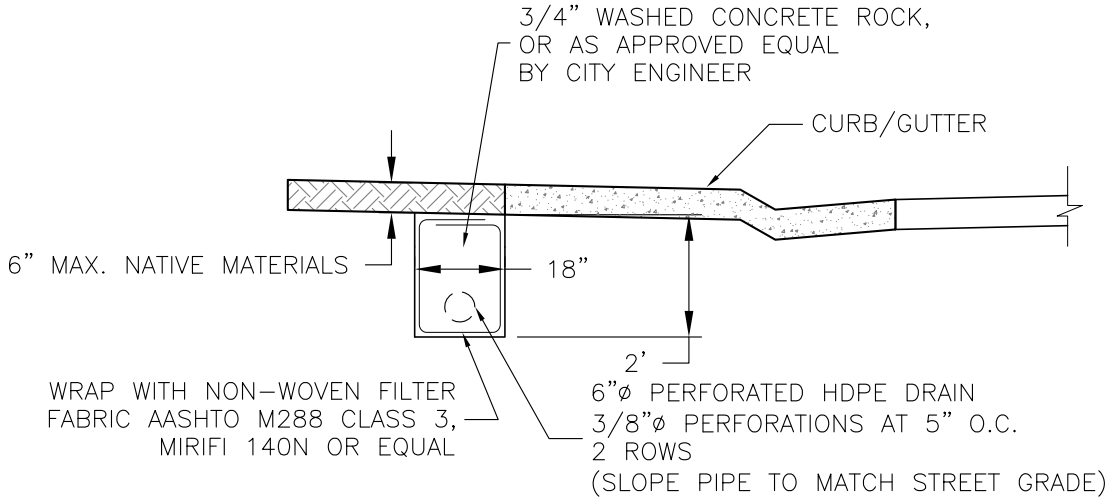

UNDERDRAIN AT BACK OF WALK

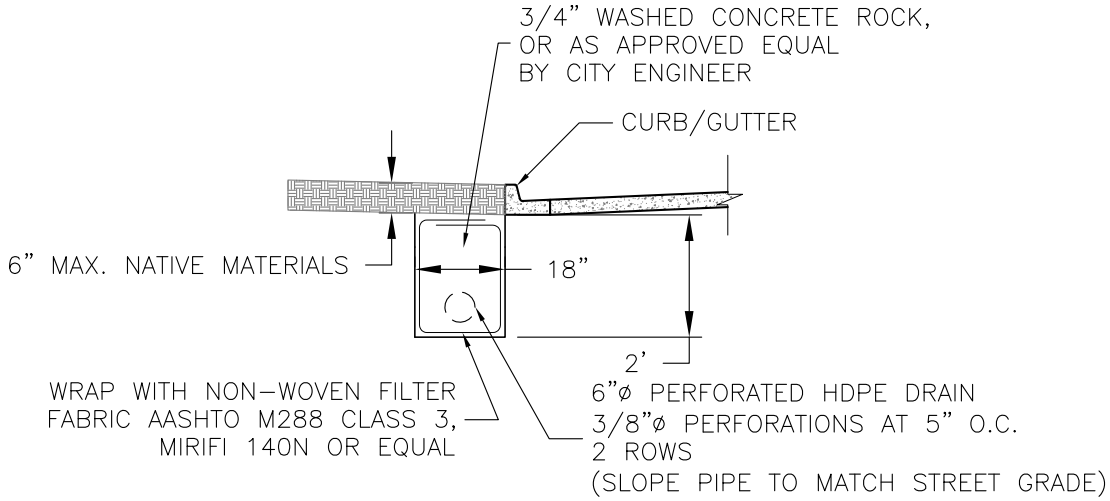

UNDERDRAIN AT CURB

NOTES:

1. UNDERDRAIN PIPE SHALL BE CONNECTED TO A STORM SEWER INLET. PIPE TO BE INSERTED THROUGH WALL OF INLET AND PENETRATION SHALL BE GROUTED AROUND PIPE TO ENSURE IT IS WATER TIGHT.

		DATE: DEC 2013
Town of Superior — Gateway to Boulder Valley©	ROADWAY DESIGN STANDARDS	STANDARD DRAWING
	CURB DRAIN DETAIL	19

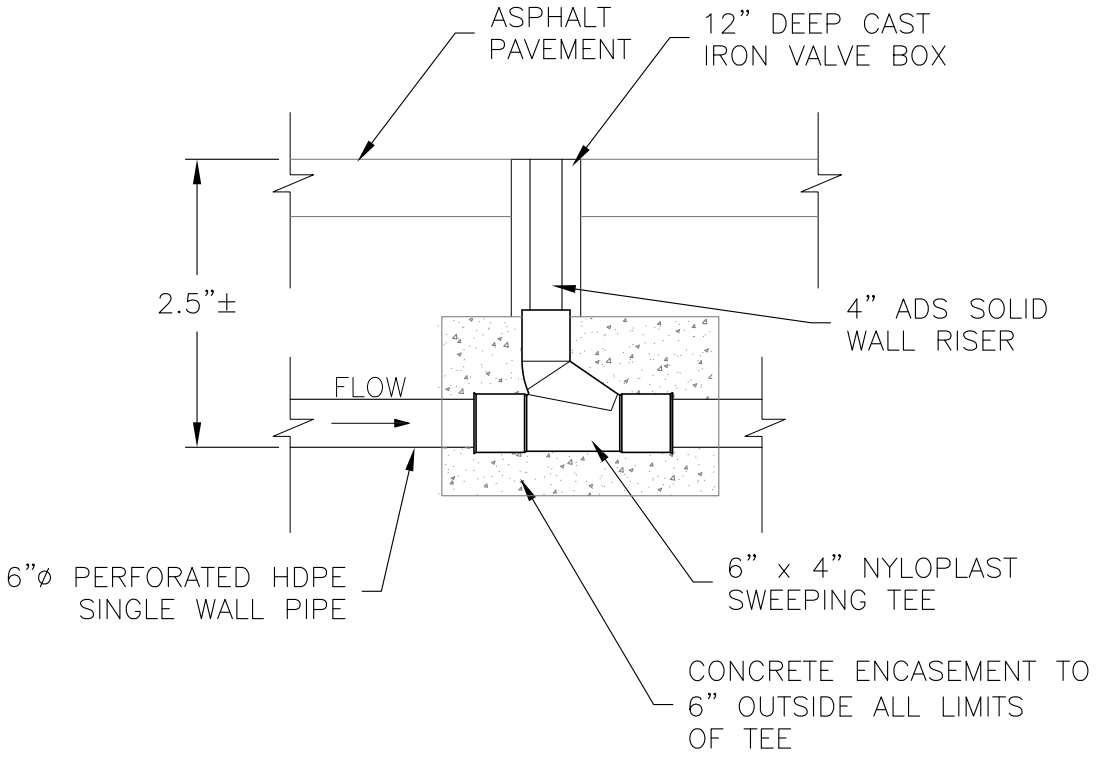

NOTE:
CLEAN OUTS TO BE PLACED AT END OF CURB DRAIN (HIGH POINT) AND EVERY 400'.

		DATE: DEC 2013
Town of Superior — Gateway to Boulder Valley©	ROADWAY DESIGN STANDARDS	STANDARD DRAWING
	CURB DRAIN CLEANOUT DETAIL	20

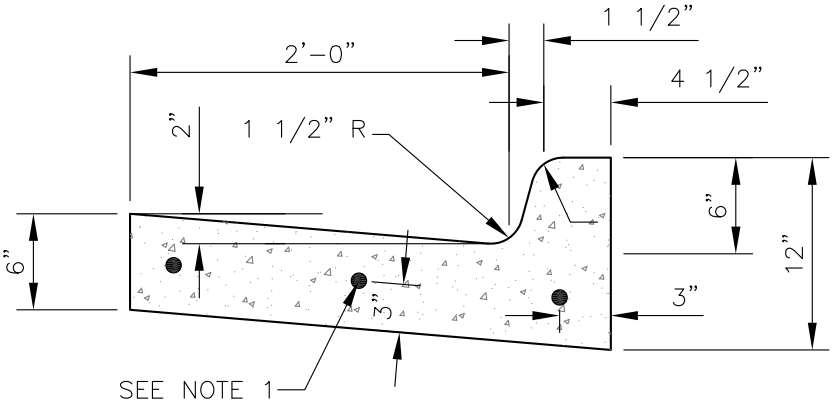

VERTICAL CURB & GUTTER

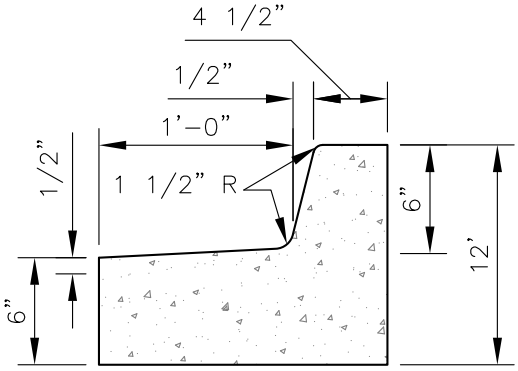

MEDIAN CURB & GUTTER

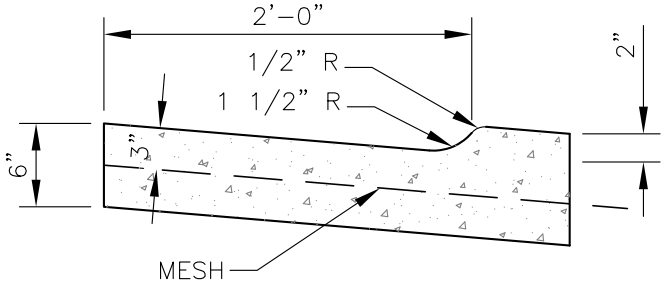

TYPICAL CURB & GUTTER
AT DRIVEWAY

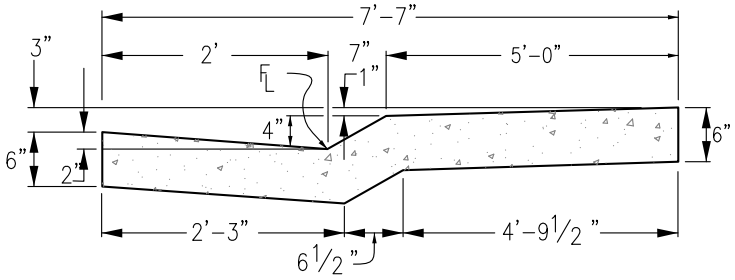

CURB AND GUTTER TYPE 2

(SECTION MS)

(4" MOUNTABLE WITH SIDEWALK)

NOTES:

1. NO. 4 REBAR SHALL BE USED IN ALL CURB RETURNS WITH 25' OR LARGER RADII. THE REBAR SHALL BE USED FROM BEGINNING TO END OF THE CURB RETURN.

2. SUBGRADE UNDER CURB, GUTTER AND SIDEWALK TO BE COMPACTED TO 95% AASHTO T-180.

3. IF A SIDEWALK IS PLACED BEHIND THE CURB BUT IS NOT PLACED MONOLITHICALLY, A SILICONE BASE SEALER MUST BE APPLIED BETWEEN THE SIDEWALK AND THE CURB.

4. CONCRETE TO BE 4,000 psi STRENGTH.

		DATE: DEC 2013
Town of Superior — Gateway to Boulder Valley®	ROADWAY DESIGN STANDARDS	STANDARD DRAWING
	CURB, GUTTER, AND WALK	21

T IS 4" IN OPEN AREAS (GRASS)
T IS 8" IN PARKING AREAS, FIRE LANE ALLEYS AND DRIVEWAYS

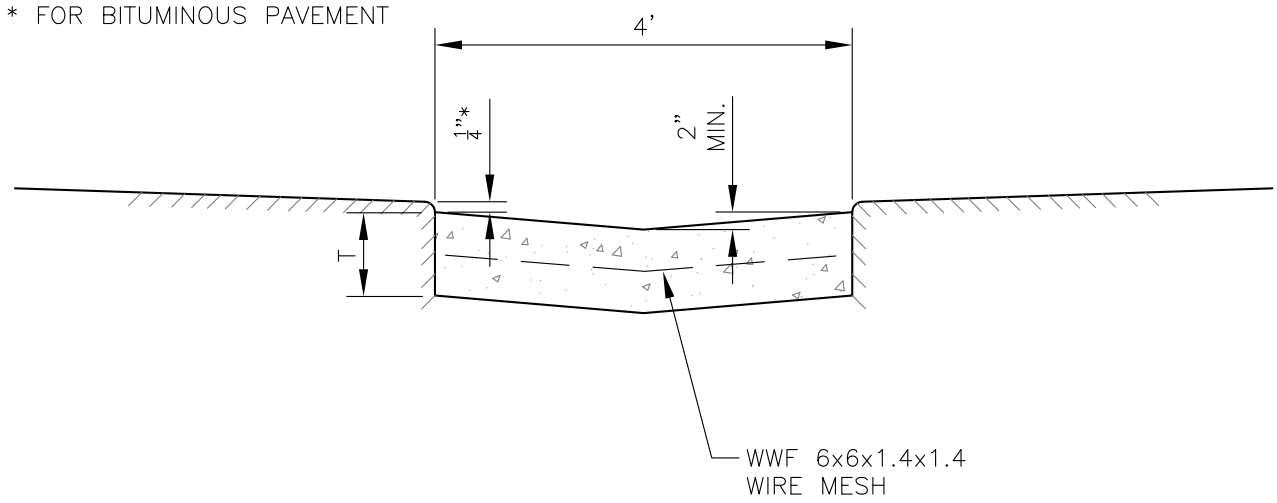

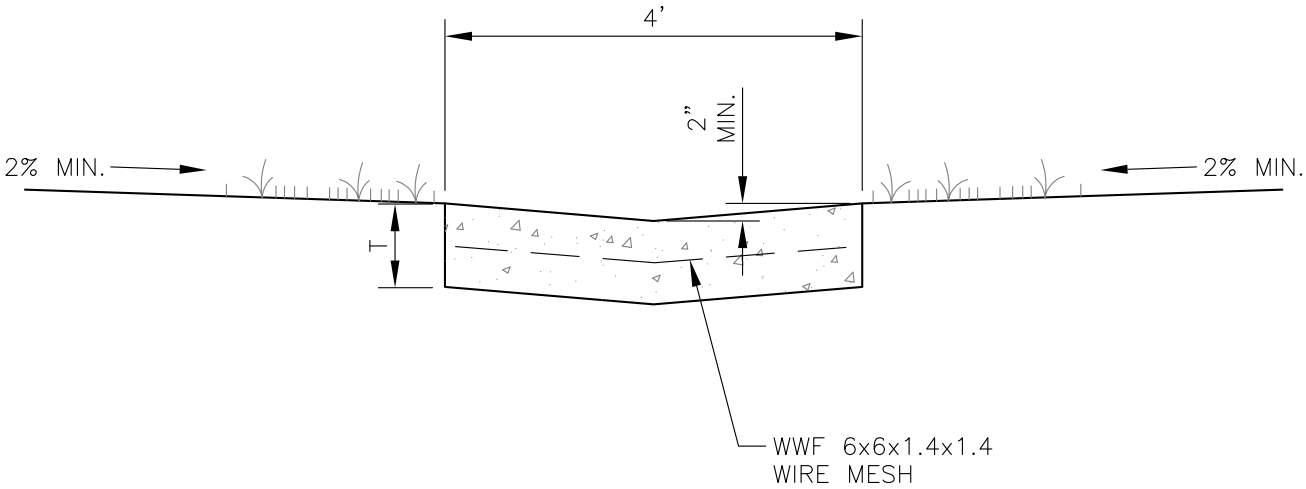

NOTE: CONCRETE TO BE 4,000 psi STRENGTH.

		DATE: DEC 2013
Town of Superior — Gateway to Boulder Valley©	ROADWAY DESIGN STANDARDS	STANDARD DRAWING
	VALLEY GUTTER	22

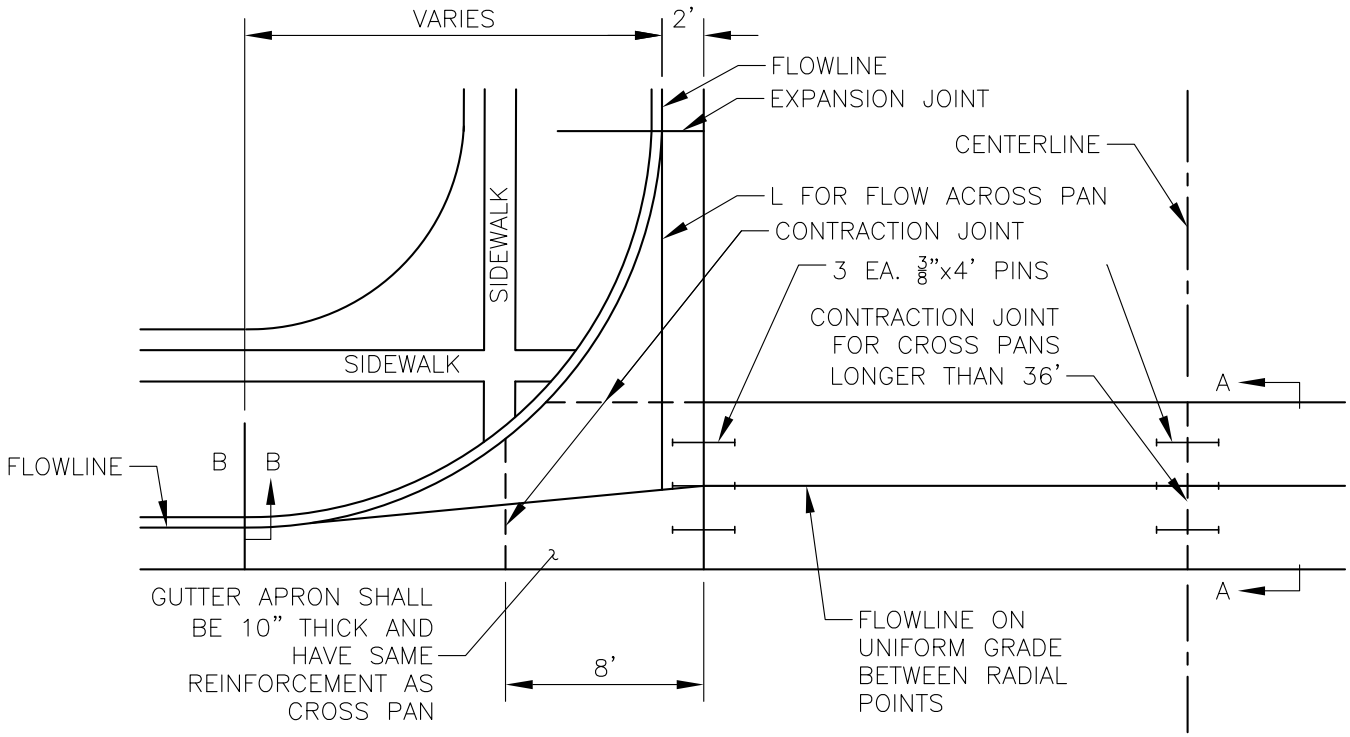

PLAN

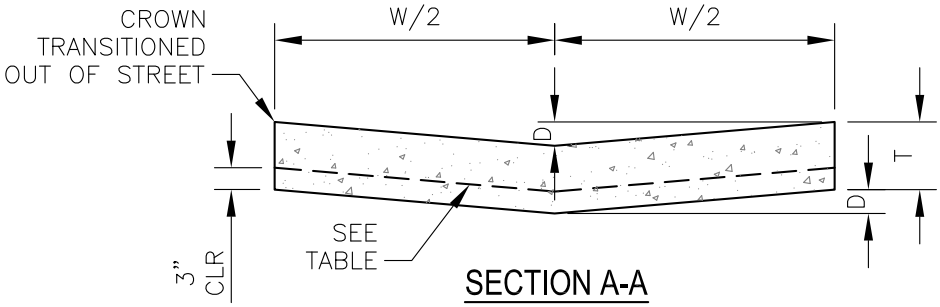

SECTION A-A

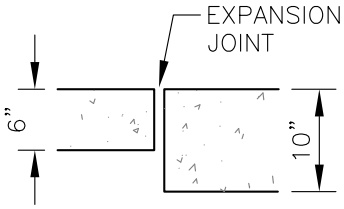

SECTION B-B

NOTE: CONCRETE TO BE 4,000 psi STRENGTH.

WIDTH (W)	DEPTH (D)	THICKNESS (T)
8'	2"	10"
10'	2 1/2"	10"

USE 10' PAN WHEN PARALLEL TO ARTERIALS AND COLLECTORS

PAN LENGTH	WIRE MESH CALLED FOR	REPLACE WITH REBAR HAVING END AREA OF
36'	6X6-4,4	0.10 SQ. IN. PER FT. (#4@18" E.W.)
46'	6X6-2,2	0.13 SQ. IN. PER FT. (#4@18" E.W.)
64'	6X6-0,0	0.20 SQ. IN. PER FT. (#4@12" E.W.)
84'	(2)6X6-2,2	0.26 SQ. IN. PER FT. (#4@ 9" E.W.)

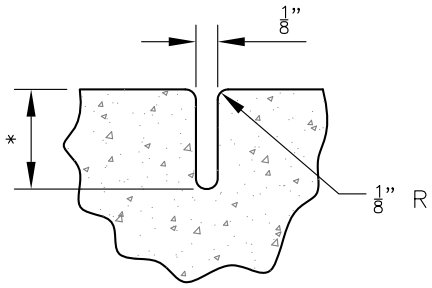

* 1/4" IF TEMPLATES ARE NOT USED

CONTRACTION OR WEAKENED PLANE JOINT

DATE: DEC 2013

Town of Superior
Gateway to Boulder Valley

ROADWAY DESIGN STANDARDS

STANDARD DRAWING

CROSS PAN

23

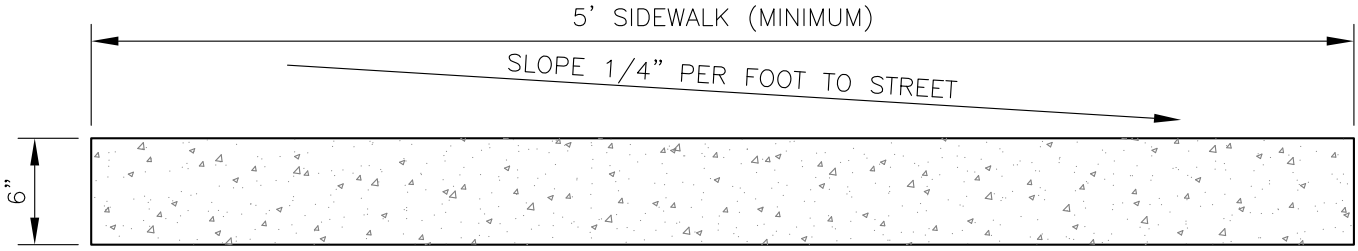

STANDARD DETACHED/ATTACHED WALK

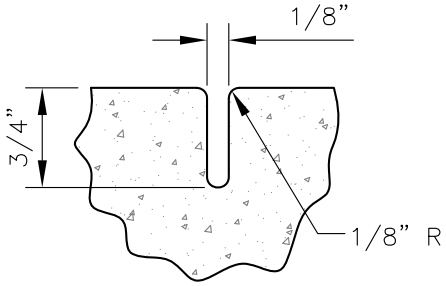

CONTRACTION OR
WEAKENED PLANE JOINT
(EVERY 5 TO 8 FEET)

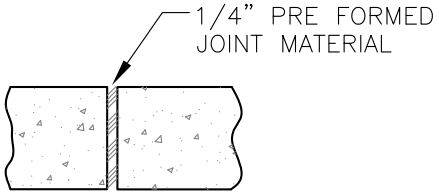

EXPANSION JOINT
(EVERY 30 FEET)

NOTE: CONCRETE TO BE 4,000 psi STRENGTH.

		DATE: DEC 2013
Town of Superior — Gateway to Boulder Valley®	ROADWAY DESIGN STANDARDS	STANDARD DRAWING
	SIDEWALK DETAILS	24

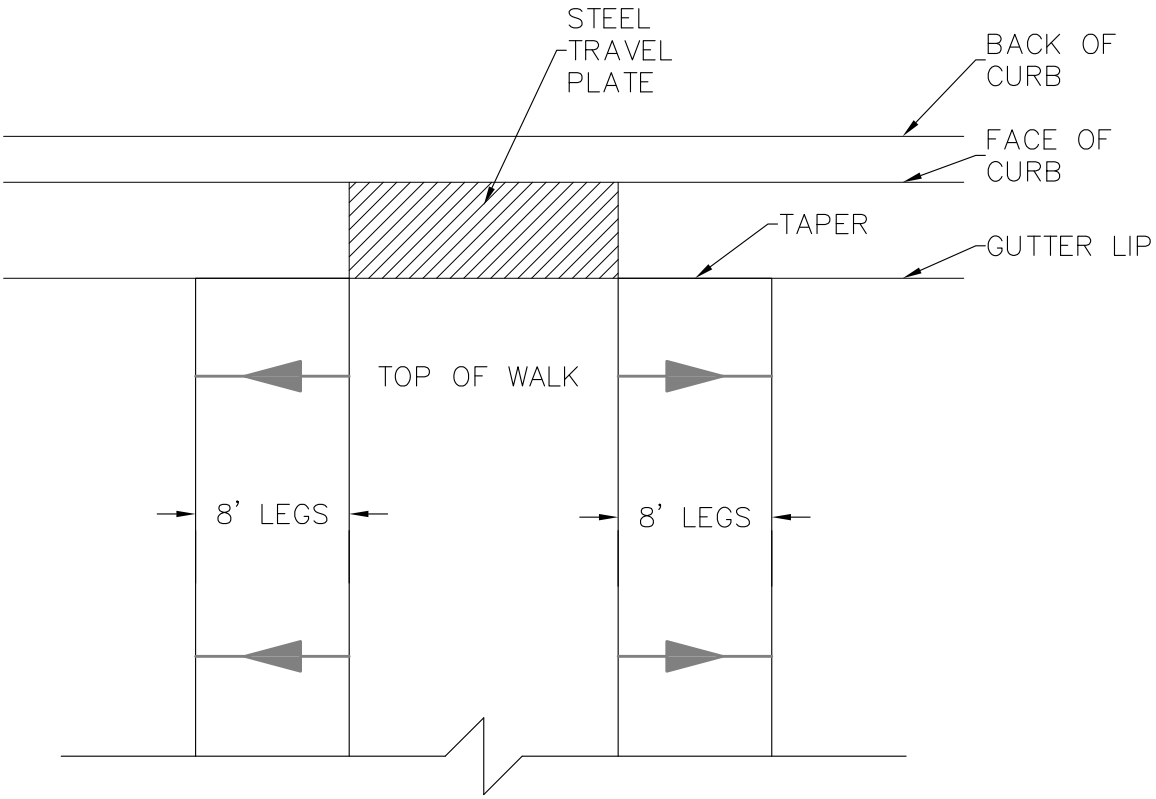

NOTES:

1. RAISED WALK SHALL FOLLOW CROWN OF ROAD WITH CONSTANT THICKNESS OF 6".
2. RAMP OR ELEVATED APPROACHES MAY BE USED.
3. RAISED WALKS ARE NOT ALLOWED ON MAJOR COLLECTOR OR ARTERIAL ROADWAYS.

		DATE: DEC 2013
Town of Superior™ Gateway to Boulder Valley©	ROADWAY DESIGN STANDARDS	STANDARD DRAWING
	RAISED PEDESTRAIN WALK	25

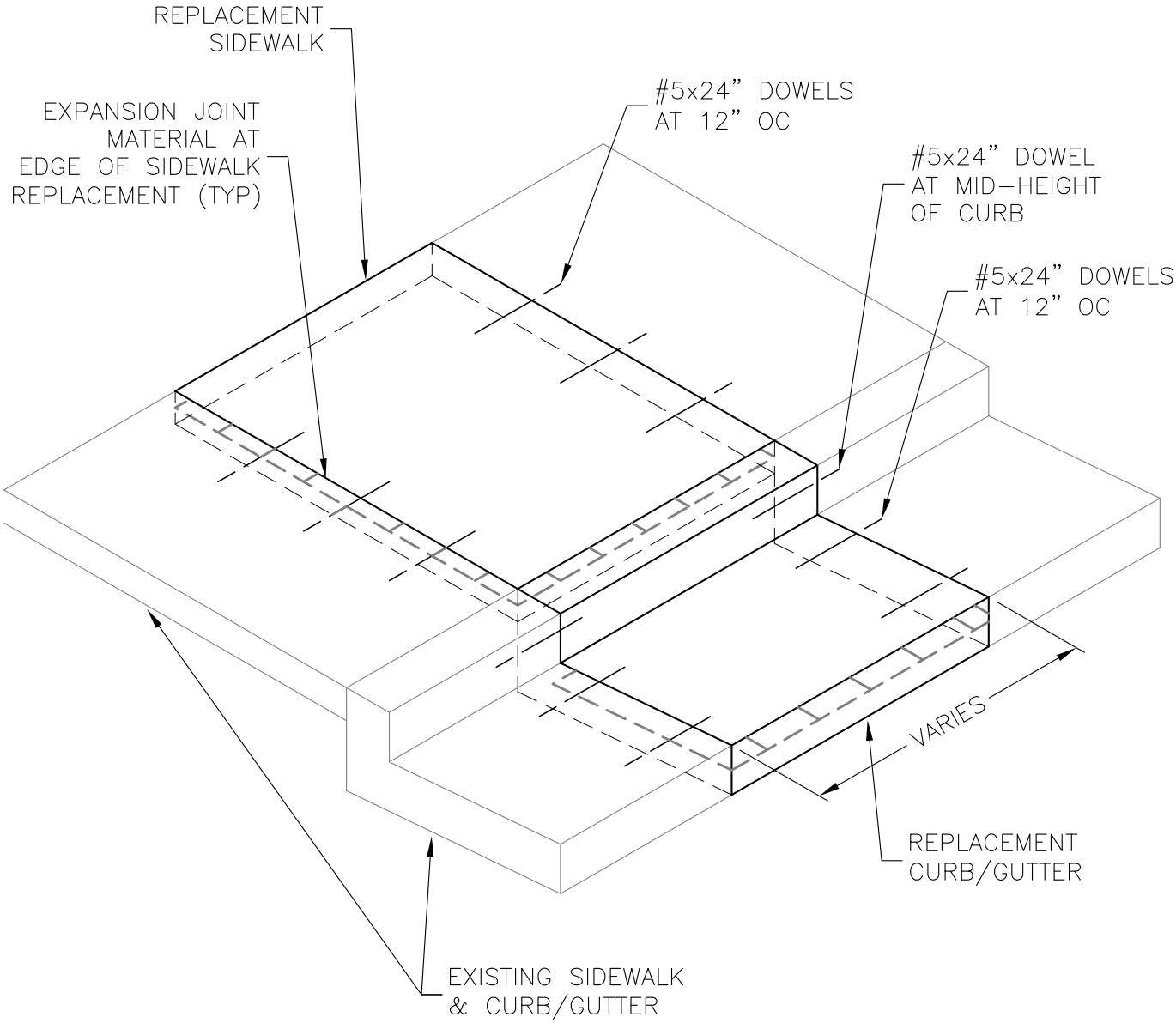

		DATE: DEC 2013
Town of Superior — Gateway to Boulder Valley©	ROADWAY DESIGN STANDARDS	STANDARD DRAWING
	SIDEWALK REPLACEMENT VERTICAL CURB / ATTACHED WALK	26

GENERAL NOTES FOR CURB RAMPS:

1. THE FOLLOWING CURB RAMP TYPES ARE GENERAL REPRESENTATIONS AND MAY REQUIRE MODIFICATION TO FIT ACTUAL FIELD CONDITIONS. MOST APPLICATIONS WITHIN THE TOWN ARE RETROFIT SITUATIONS WHERE ONE OR MORE CONSTRAINTS SUCH AS LIMITED R.O.W. SIGNIFICANT GRADE DIFFERENCES, AND DRAINAGE CONCERNS MUST BE TAKEN INTO ACCOUNT IN LOCATING THE CURB RAMP(S). DESIGN RESOURCES ARE AVAILABLE WITHIN THE TOWN TO ASSIST WITH THE PROPER SELECTION AND APPLICATION OF RAMP TYPE TO MAINTAIN APPLICABLE STANDARDS.

2. CURB RAMPS ALIGNED IN THE DIRECTION OF PEDESTRIAN TRAVEL ARE THE PREFERRED STANDARD FOR NEW RAMP CONSTRUCTION. DIRECTIONAL RAMPS SHALL BE POSITIONED TO DIRECTLY ALIGN WITH OPPOSING CURB RAMPS, UNLESS SPECIFICALLY APPROVED OTHERWISE BY PUBLIC WORKS.

3. PLACEMENT OF DIAGONAL OR MID–BLOCK CURB RAMPS MUST BE APPROVED BY PUBLIC WORKS.

4. FOR EACH CURB RAMP INSTALLATION, ADDITIONAL REMOVAL AND REPLACEMENT OF EXISTING SIDEWALKS MAY BE REQUIRED TO FACILITATE PROPER TRANSITIONS TO RAMP.

5. CURB RAMPS SHALL MATCH APPROACHING CLEAR SIDEWALK WIDTH, OR 5' MINIMUM, WHICHEVER IS GREATER. CURB RAMP THROAT WIDTH SHALL NOT EXCEED 8'.

6. THE DISTANCE BETWEEN THE FLOW LINE (FL) AND THE BACK OF THE CURB RAMP IS VARIABLE DEPENDENT ON SITE CONDITIONS BUT SHALL BE NO LESS THAN 5'–6" AT THE RAMP CENTERLINE. IN NO CASE MAY THE RAMP SLOPE EXCEED 1" PER FOOT (12:1), OR BE LESS THAN ¼" PER FOOT (2%), EXCEPT AS ALLOWED BY APPLICABLE REGULATIONS.

7. THE MAXIMUM CROSS SLOPE OF THE CURB RAMP SURFACE SHALL BE 2%. WHERE RAMPS ARE BEING CONSTRUCTED ON EXISTING STREETS, THE CROSS SLOPE OF THE RAMP CAN INCREASE BEYOND 2% TO MATCH THE LONGITUDINAL STREET FLOWLINE GRADES AT THE BOTTOM OF THE RAMP. FOR CONSTRUCTION OF MULTIPLE CURB RAMPS AT CORNERS, THE LONGITUDINAL GRADE OF THE CURB AND GUTTER BETWEEN THE RAMPS SHALL NOT EXCEED AN AMOUNT THAT CAUSES EITHER RAMP TO FALL OUTSIDE SLOPES AS DEFINED IN NOTE 6.

8. THE MAXIMUM 'SLOPE' OF THE GUTTER IN FRONT OF THE RAMP SHALL BE 5/8 " PER FOOT (20:1). FOR A STANDARD 2' GUTTER PAN, THIS RESULTS IN A MAXIMUM GUTTER DEPTH OF NO MORE THAN 1 ¼". TO TRANSITION FROM THE STANDARD 2" GUTTER DEPTH TO THE 1 ¼" DEPTH IN FRONT OF THE RAMP, WARP THE GUTTER LIP IN A 5' CURB AND GUTTER SECTION ADJACENT TO THE RAMP. AT THE DISCRETION OF PW, THE 1 ¼" GUTTER DEPTH MAY BE CONTINUED AROUND THE FULL CURB RETURN RADIUS.

9. A LEVEL (2% SLOPE MAX IN ANY DIRECTION) LANDING AREA, 5' DEEP TYPICAL BY THE WIDTH OF THE RAMP THROAT SHALL BE REQUIRED AT THE TOP OF EACH CURB RAMP. THE DEPTH OF THE LEVEL LANDING AREA IS TYPICALLY SET AT 5' TO MATCH WIDTH OF APPROACHING SIDEWALKS, BUT IN NO CASES SHALL BE LESS THAN 4'.

10. IF POSSIBLE, DRAINAGE STRUCTURES SHALL NOT BE PLACED IN LINE WITH RAMPS. LOCATION OF THE RAMP SHALL TAKE PRECEDENCE OVER LOCATION OF THE DRAINAGE STRUCTURE, EXCEPT WHERE EXISTING STRUCTURES ARE BEING PRESERVED IN NEW CONSTRUCTION AREAS.

11. ALL CURB RAMPS SHALL BE CONSTRUCTED WITH TACTILE WARNINGS (CAST IRON TRUNCATED DOME PANEL) AS DEFINED IN THE AMERICANS WITH DISABILITIES ACT ACCESS GUIDELINES (ADAAG) LATEST REVISION. THE CAST IRON TRUNCATED DOME PANEL(S) SHALL BE INSTALLED ACROSS THE FULL WIDTH OF THE RAMP, AND SET SO THAT THE CLOSEST POINT(S) TO THE STREET IS 6" FROM THE FACE OF CURB/FLOWLINE. AT NO POINT SHALL THE STREET EDGE OF THE TRUNCATED DOME PANEL BE LOCATED MORE THAN 8" FROM THE FACE OF CURB/ FLOWLINE.

12. AS POSSIBLE, THE TRUNCATED DOME PATTERN SHALL BE LAID OUT PARALLEL TO THE DIRECTION OF PEDESTRIAN TRAVEL. THIS PARAMETER SHALL BE SECONDARY TO REQUIREMENTS OF NOTE 11.

13. CAST IRON TRUNCATED DOME PANELS SHALL BE BRICK RED, TILE RED OR OTHER EQUIVALENT COLOR TO PROVIDE COLOR CONTRAST WITH THE ADJOINING WALK SURFACE AS REQUIRED BY ADAAG, EXCEPT WHEN RETROFITTING OLD RED CONCRETE RAMPS OR WHERE SHOWN ON BLENDED TRANSITION RAMPS, AND THEN THE COLOR SHALL BE GRAY. COLORS MUST BE APPROVED BY PW PRIOR TO CONSTRUCTION.
CONCRETE FOR CURB RAMP CONSTRUCTION SHALL NOT BE STAINED OR HAVE COLOR ADDED.

14. A SAMPLE OF THE CAST IRON TRUNCATED DOMES SHALL BE SUBMITTED TO, AND APPROVED BY PW PRIOR TO CONSTRUCTION. TRUNCATED DOME SIZE SHALL MEET ANSI REQUIREMENTS AND HAVE NON–SLIP TOPS.

15. ABOVE TRUNCATED DOMES, CURB RAMPS SHALL BE SCORED WITH DUMMY GROOVES 3/8" DEEP ON 12" CENTERS. THE GROOVES SHALL BE PLACED IN THE RAMP SECTION ABOVE THE TRUNCATED DOMES AND ALIGNED PARALLEL TO THE DIRECTION OF THE RAMP AND STREET CROSSING.

16. ANY REQUIRED TRANSITION BETWEEN VERTICAL AND MOUNTABLE CURB ADJACENT TO RAMPS SHOULD OCCUR IN A MAXIMUM OF 10'.

17. AN ASPHALT PATCH IS NORMALLY REQUIRED IN STREET AREAS ADJACENT TO NEW CURB RAMP INSTALLATIONS.

18. PAY LIMITS OF ALL RAMPS ARE COMPRISED OF ALL AREA SHOWN WITH CONCRETE HATCHING, ON THE APPLICABLE DETAILS, UNLESS OTHERWISE NOTED.

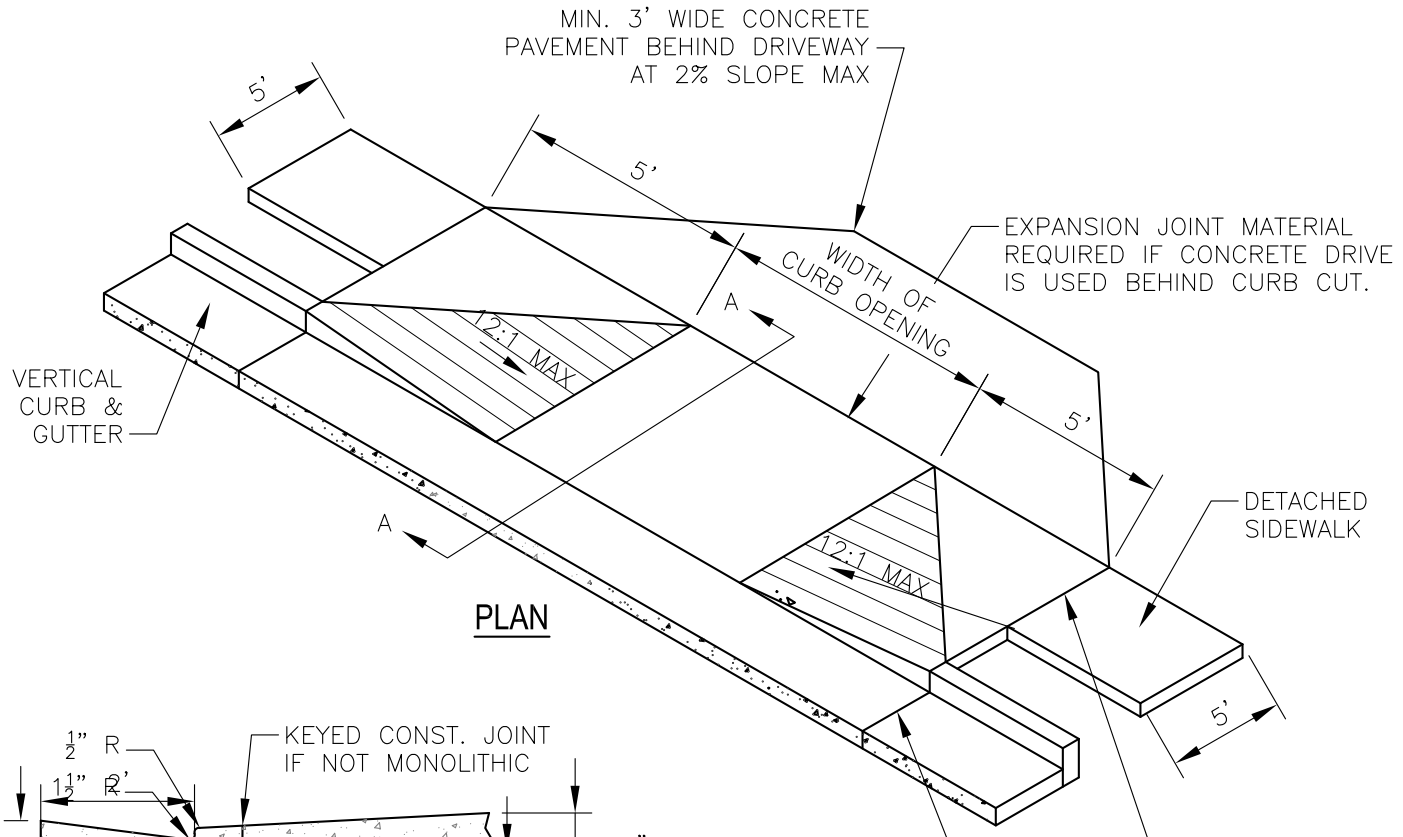

PLAN

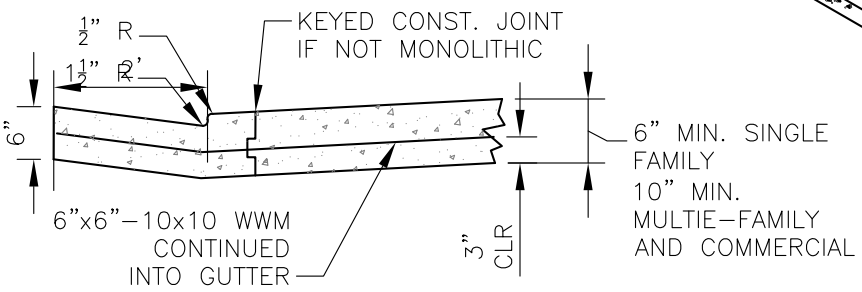

SECTION A-A

NOTES:

1. EXTEND BACK OF CURB CUT TO BACK OF SIDEWALK.

2. TOWN ENGINEER SHALL APPROVE LOCATION OF CURB CUT BEFORE CONSTRUCTION.

3. AN ACCESS SHALL BE LIMITED TO RIGHT TURNS ONLY, UNLESS (1) IT HAS THE POTENTIAL FOR SIGNALIZATION, (2) LEFT TURNS WOULD NOT CREATE UNREASONABLE CONGESTION OR SAFETY PROBLEMS AND LOWER THE LEVEL OF SERVICE, AND (3) ALTERNATIVES TO THE LEFT TURNS WOULD NOT CAUSE UNACCEPTABLE TRAFFIC OPERATION AND SAFETY PROBLEMS TO THE GENERAL STREET SYSTEM.
4. CONCRETE TO BE 4,000 psi STRENGTH.

5. CAST IRON TRUNCATED DOME WARNING PLATES MAY BE REQUIRED IN SIDEWALKS CONNECTING TO DRIVEWAY/ALLEYWAY CUTS IN COMMERCIAL AREAS.

WIDTH OF CURB OPENINGS

	RESIDENTIAL SF	RESIDENTIAL MF	COMMERCIAL	SERVICE STATION	INDUSTRIAL
MINOR COLLECTOR	NA	30-35	40-50	40-50	40-50
LOCAL	8-24	30-35	40-50	40-50	40-50

CURB OPENINGS 30' OR MORE MUST BE CONSTRUCTED WITH RADIUS CURB RETURNS.

DATE: DEC 2013

Town of Superior
Gateway to Boulder Valley©

ROADWAY DESIGN STANDARDS

STANDARD DRAWING

DRIVEWAY CUT

28

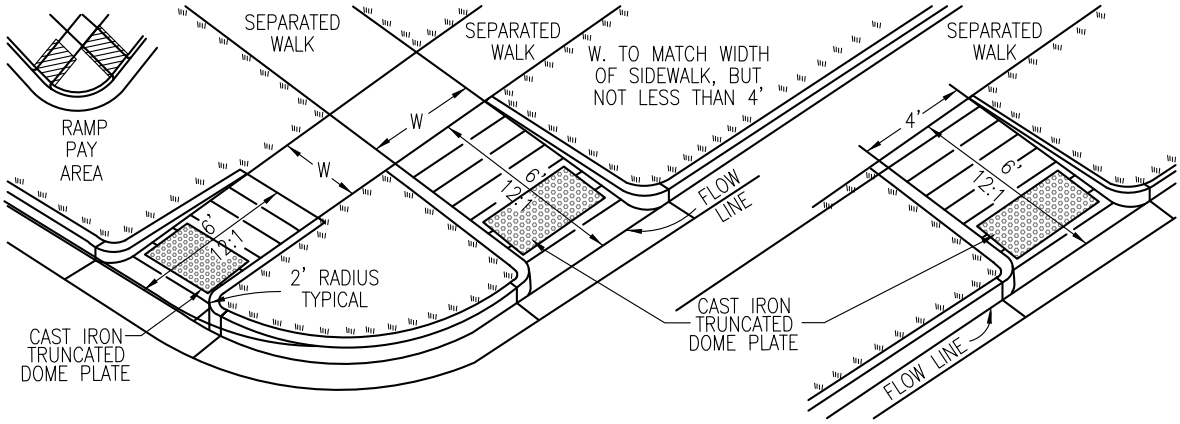

TYPE 1

TYPE 1 – FOR USE IN AREAS WHERE THE SIDEWALK IS SET BACK FROM THE STREET, AND WHEELCHAIR ACCESS FROM THE SIDE OF THE RAMP IS NOT LIKELY TO OCCUR BECAUSE THE APPROACH AREA IS COVERED BY LAWN OR GRAVEL, OR AN OBSTRUCTION IS PRESENT. TYPE 1 CAN USED ANYWHERE IN THE BLOCK.

		DATE: DEC 2013
Town of Superior — Gateway to Boulder Valley©	ROADWAY DESIGN STANDARDS	STANDARD DRAWING
	TYPE 1 HANDICAP RAMP	29

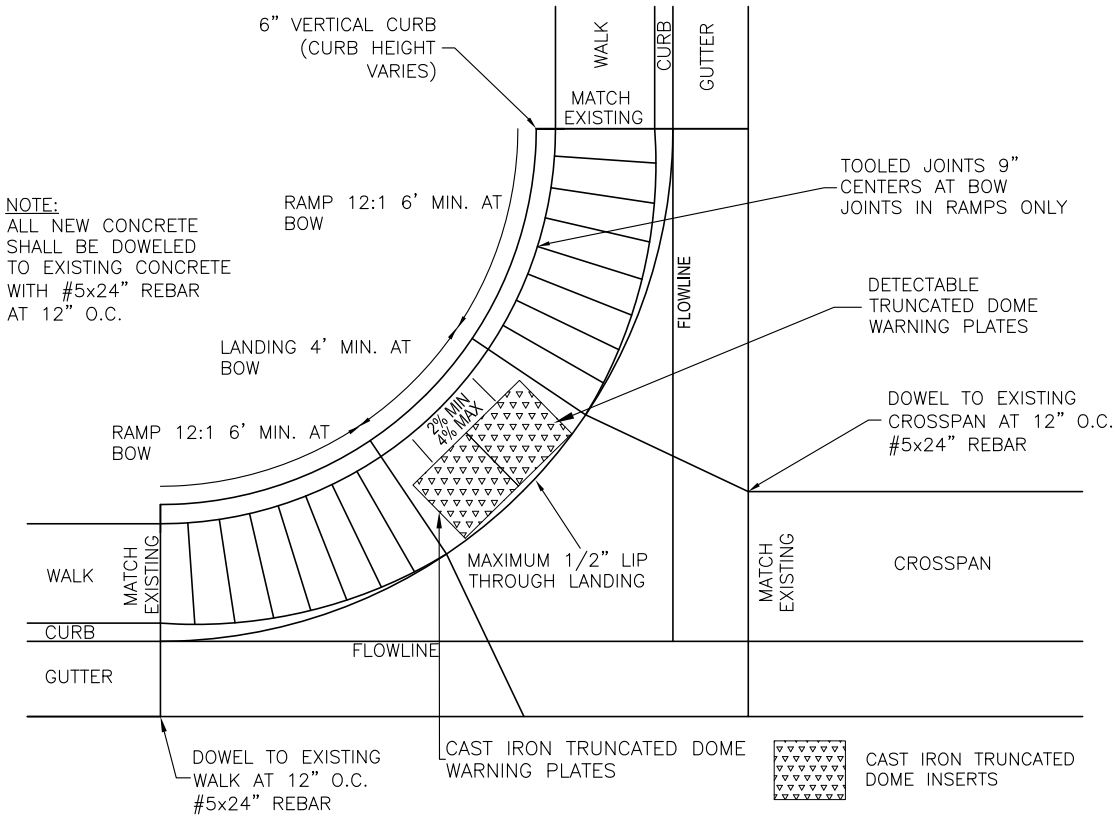

		DATE: DEC 2013
Town of Superior™ Gateway to Boulder Valley©	ROADWAY DESIGN STANDARDS	STANDARD DRAWING
	TYPE 2 HANDICAP RAMP	30

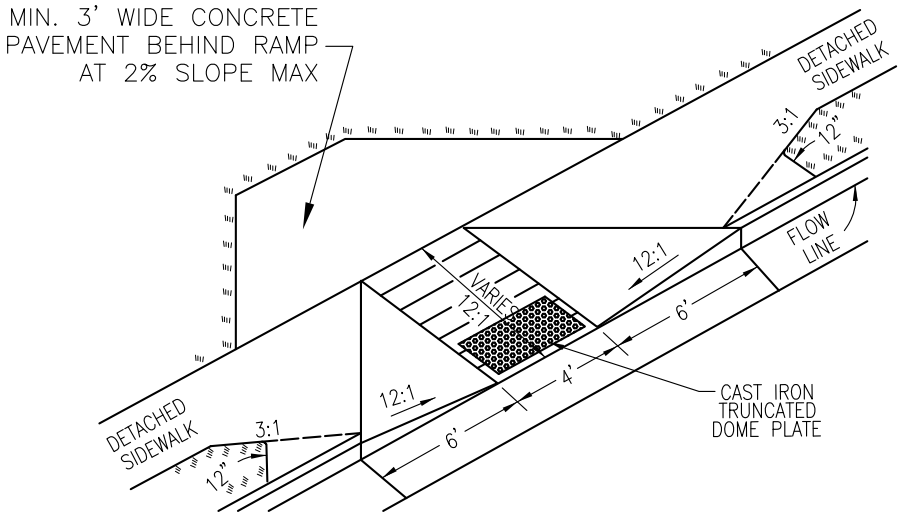

TYPE 3

TYPE 3 – RAMP IS FOR USE WHERE THE SIDEWALK EXTENDS TO THE CURB OR CAN BE EASILY TRANSITIONED TO PERMIT WHEELCHAIR ACCESS TO THE RAMP FROM THE SIDE. TYPE 3 CAN BE USED ANYWHERE IN THE BLOCK, AS WELL AS AT INTERSECTIONS.

		DATE: DEC 2013
Town of Superior — Gateway to Boulder Valley©	ROADWAY DESIGN STANDARDS	STANDARD DRAWING
	TYPE 3 HANDICAP RAMP	31

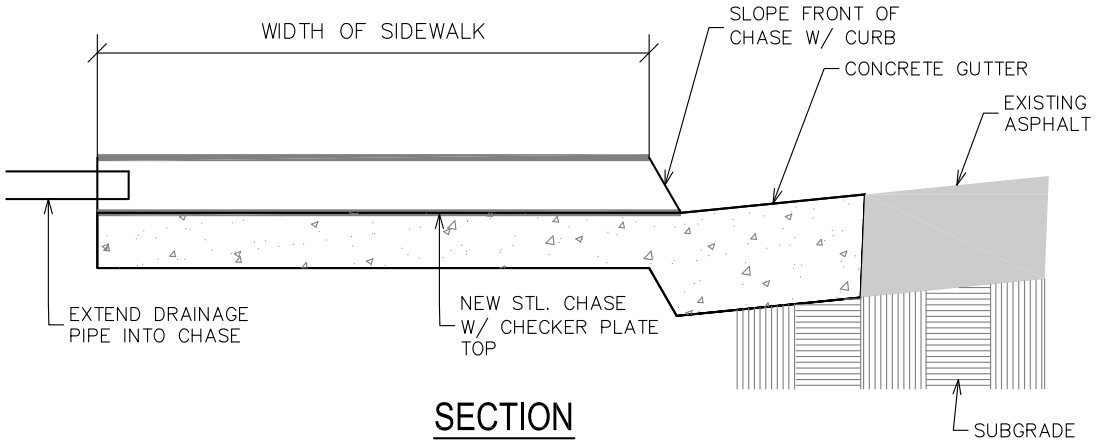

SECTION

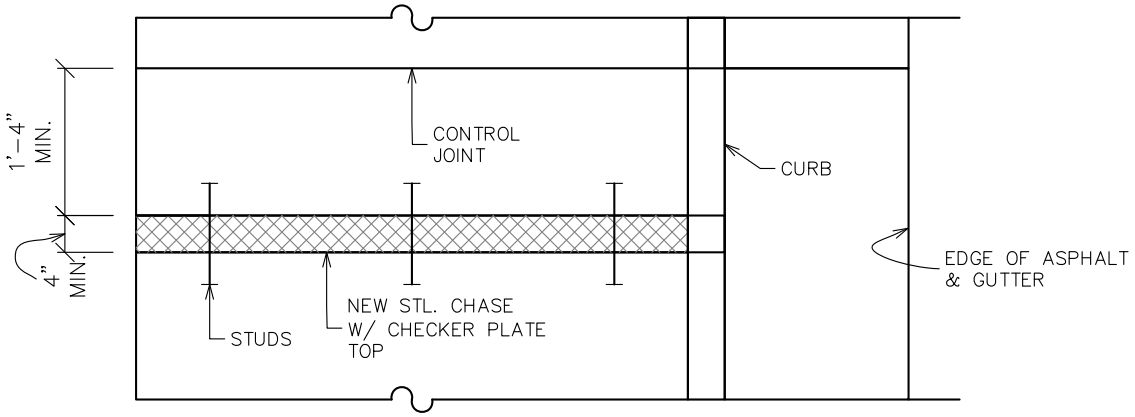

PLAN

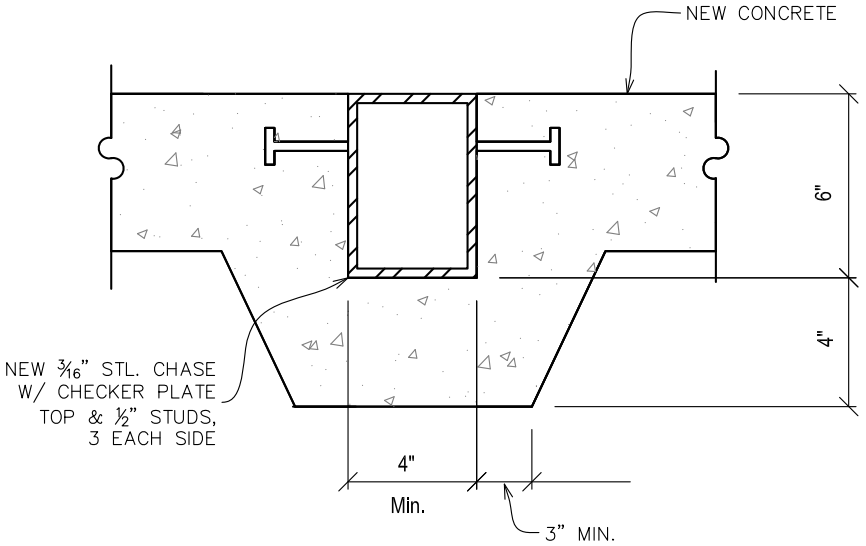

CROSS SECTION

		DATE: DEC 2013
Town of Superior™ Gateway to Boulder Valley©	ROADWAY DESIGN STANDARDS	STANDARD DRAWING
	DRAINAGE CHASE IN EXISTING ATTACHED SIDEWALK	32

NOTE: CHASE NOT PERMITTED IN 4" CURB SECTION UNLESS TRANSITIONED INTO 6" VERTICAL

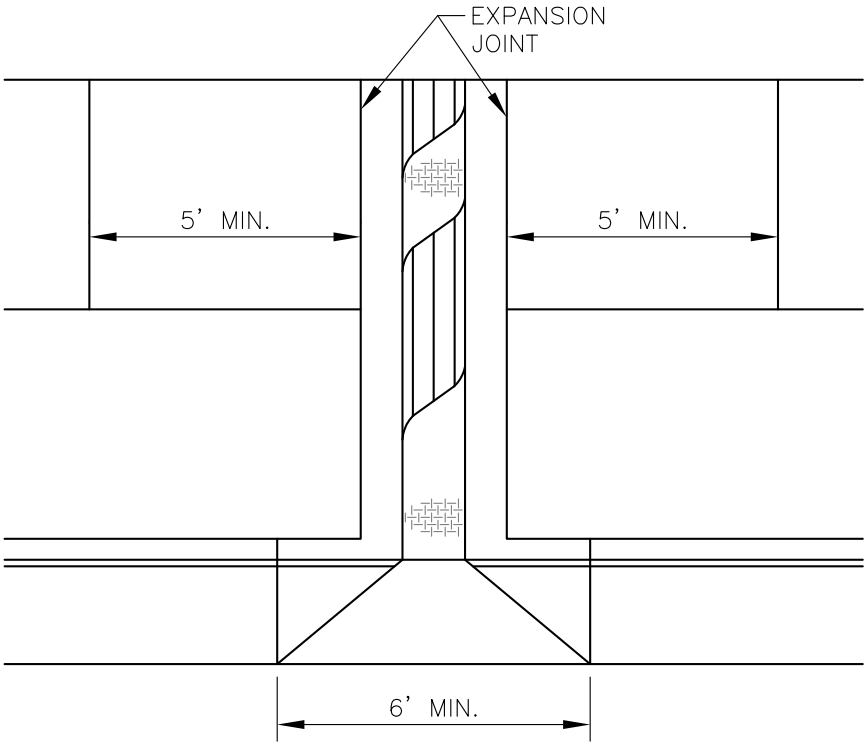

PLAN VIEW

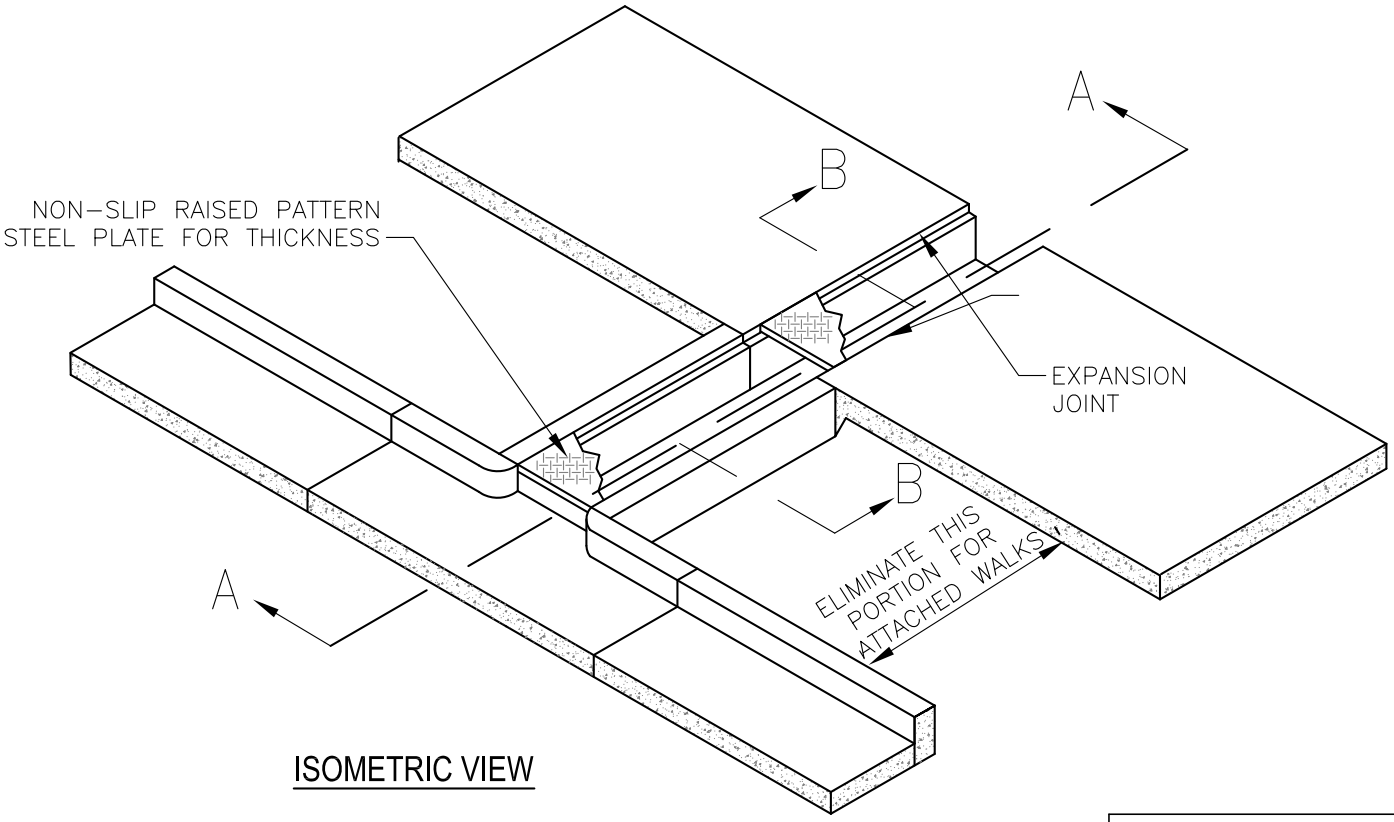

ISOMETRIC VIEW

		DATE: DEC 2013
Town of Superior — Gateway to Boulder Valley®	ROADWAY DESIGN STANDARDS	STANDARD DRAWING
	SIDEWALK CHASE DETACHED SIDEWALK	33

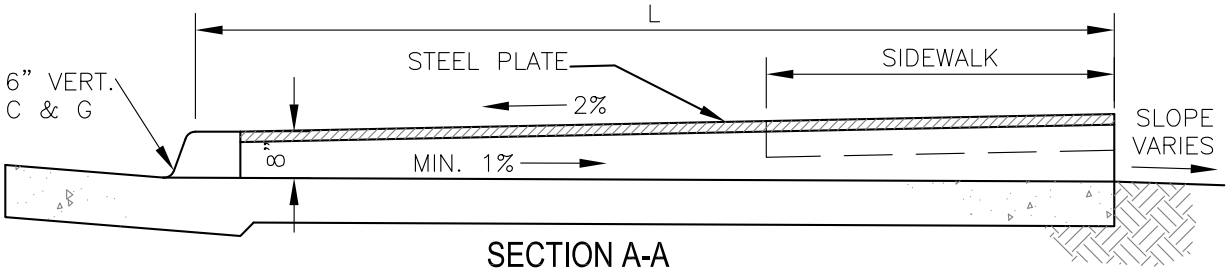

SECTION A-A
FLOW FROM GUTTER

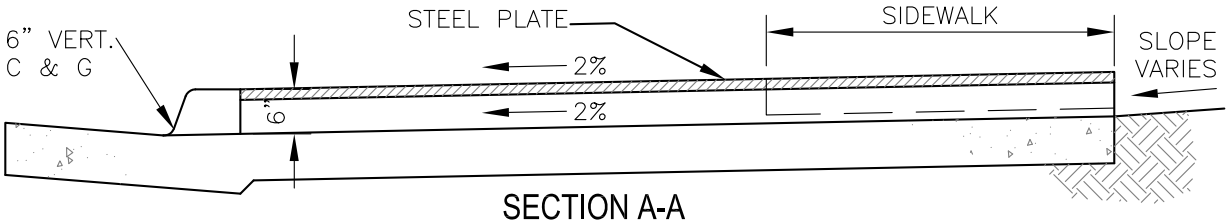

SECTION A-A
FLOW TO GUTTER

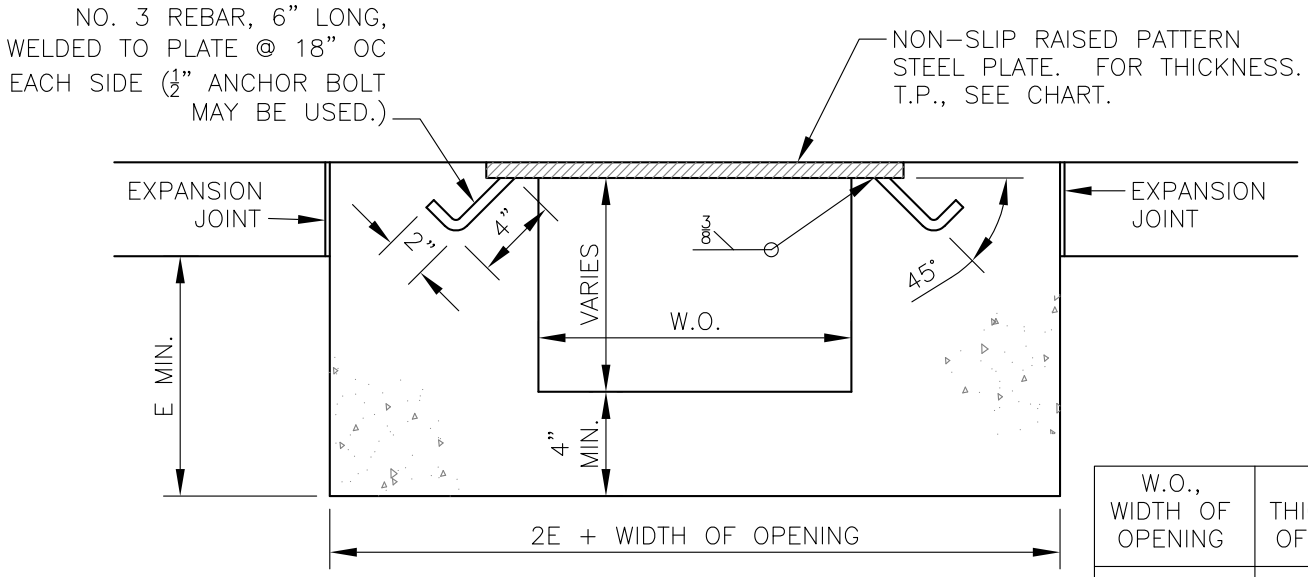

W.O., WIDTH OF OPENING	T.P., THICKNESS OF PLATE
12"	1/2"
12–18"	9/16"

E = 8" WHEN FLOW IS FROM GUTTER.
E = 6" WHEN FLOW IS TO GUTTER.

SECTION B-B

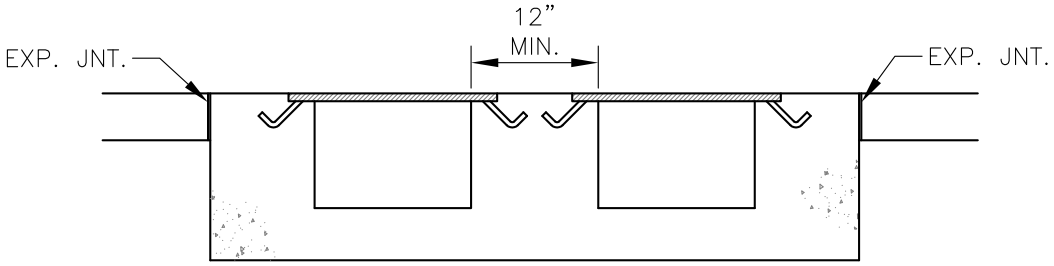

MULTIPLE CHASE
WHEN OPENINGS ARE LARGER THAN 18"

DATE: DEC 2013

	ROADWAY DESIGN STANDARDS	STANDARD DRAWING
Town of Superior — Gateway to Boulder Valley®	SIDEWALK CHASE DETACHED SIDEWALK	34

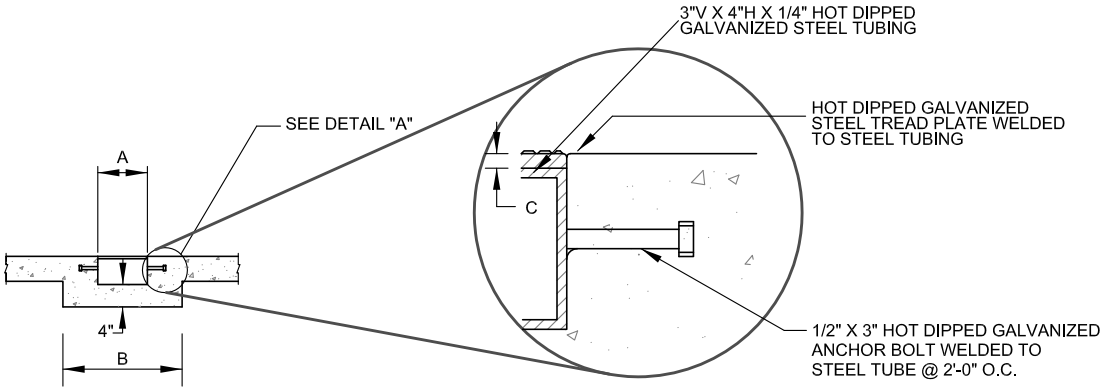

SECTION A-A

DETAIL "A"

NOT TO SCALE

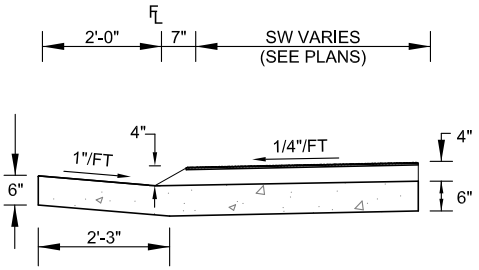

SECTION B-B
MOUNTABLE CURB

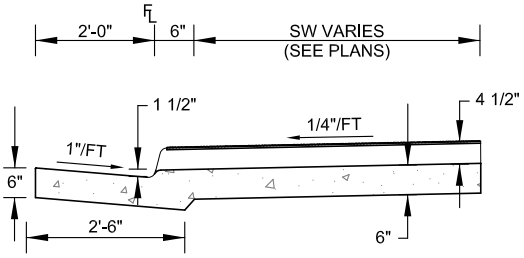

SECTION B-B
VERTICAL CURB

TYPE	A	B	C
SC	4"	18"	3/8"

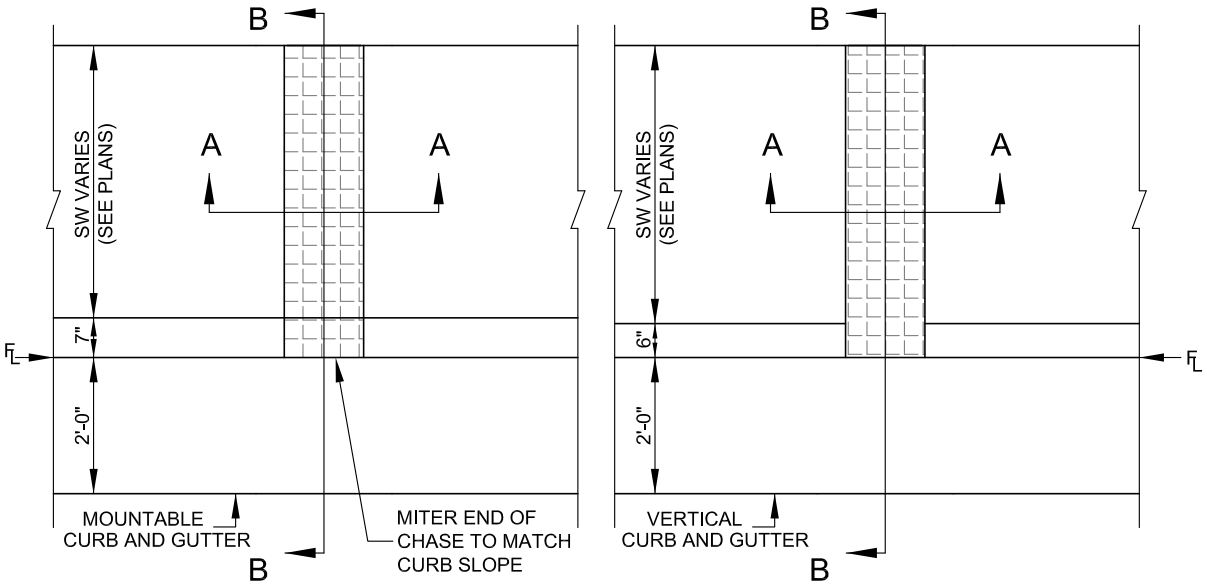

PLAN VIEW

		DATE: DEC 2013
Town of Superior — Gateway to Boulder Valley©	ROADWAY DESIGN STANDARDS	STANDARD DRAWING
	SIDEWALK CHASE SECTIONS	35

NOTE:
PAVEMENT CUTS WILL NOT BE ALLOWED WITHOUT TOWN ENGINEER APPROVAL WITHIN TWO (2) YEARS AFTER A STREET HAS BEEN CONSTRUCTED, RECONSTRUCTED, OR OVERLAID. EMERGENCY REPAIRS ARE EXEMPT.

	MINIMUM ASPHALT PATCH THICKNESS			
	ZONING			
STREET CLASSIFICATION	INDUSTRIAL		ALL OTHER	
	THICKNESS	LIFTS	THICKNESS	LIFTS
ARTERIAL	11”	3	11”	3
COLLECTOR	7”	2	7”	2
LOCAL	6”	2	6”	2

NOTE: SEE ALSO STANDARD STREET SECTION DETAIL.

MAXIMUM LIFT DEPTH – 5”

MINIMUM LIFT DEPTH – 2”

THICKNESS OF EACH LIFT BELOW THE TOP SHALL NOT VARY MORE THAN 3/8”
TOP LIFT SHALL BE GRADE Sx HOT BITUMINOUS PAVEMENT

Asphalt Patch

HMA over Compacted Subgrade with 2" Mill and
Overlay 2' Wider than Full Depth Patch on Both Sides

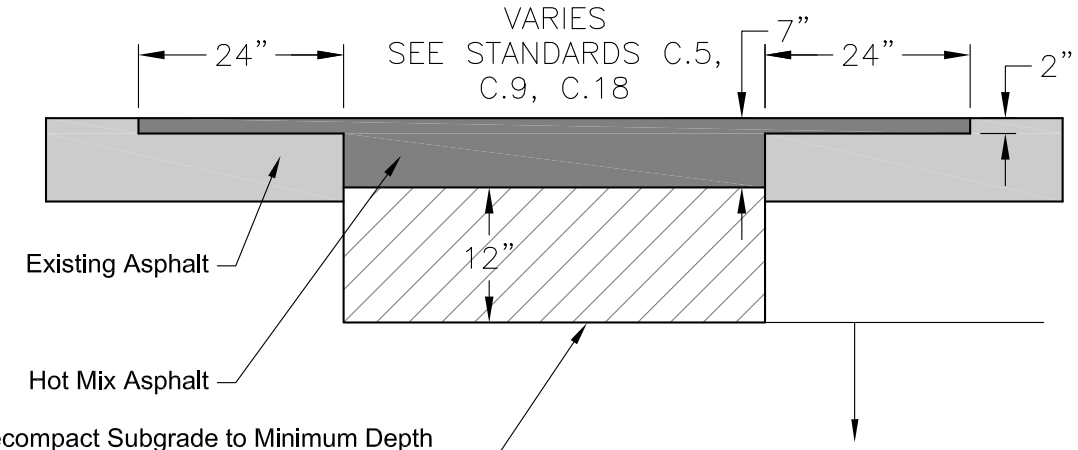

Scarify and Recompact Subgrade to Minimum Depth of 12" to 95% ± 2% of Optimum Moisture AASHTO T99. If Subgrade Soils are Unsuitable then Remove and Replace to a Minimum Depth of 12" with Class 6 Recycled Concrete Compacted to 95% ± 2% of Optimum Moisture AASHTO - T180.

Any excavation greater than 12" shall be flowfilled to pavement subgrade

		DATE: APRIL 2014
Town of Superior — Gateway to Boulder Valley©	ROADWAY DESIGN STANDARDS	STANDARD DRAWING
	TRENCH PATCH	42

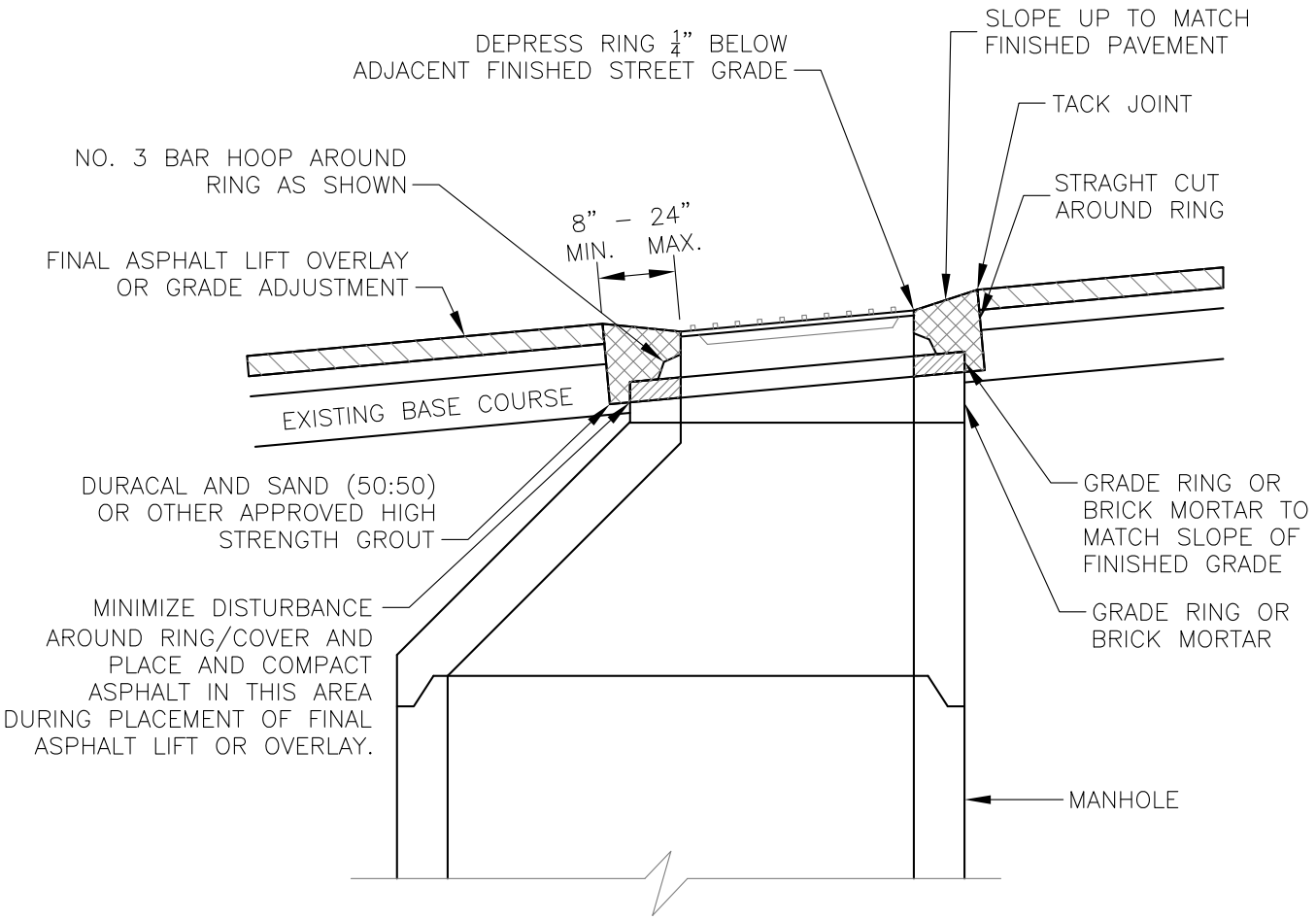

NOTES:

1. ADEQUATE BARRICADES SHALL BE PLACED AND MAINTAINED UNTIL THE COLLAR ATTAINS A COMPRESSIVE STRENGTH OF 3,000 PSI.

2. DURACAL GROUT SHALL BE A MIXTURE OF 100 LBS. DURACAL, 26 LBS. WATER (3.12 GAL.), AND 100 LBS. OF SAND CONFORMING TO ASTM C–33.

		DATE: DEC 2013
Town of Superior — Gateway to Boulder Valley©	ROADWAY DESIGN STANDARDS	STANDARD DRAWING
	MANHOLE RIM AND COVER ADJUSTMENT	43

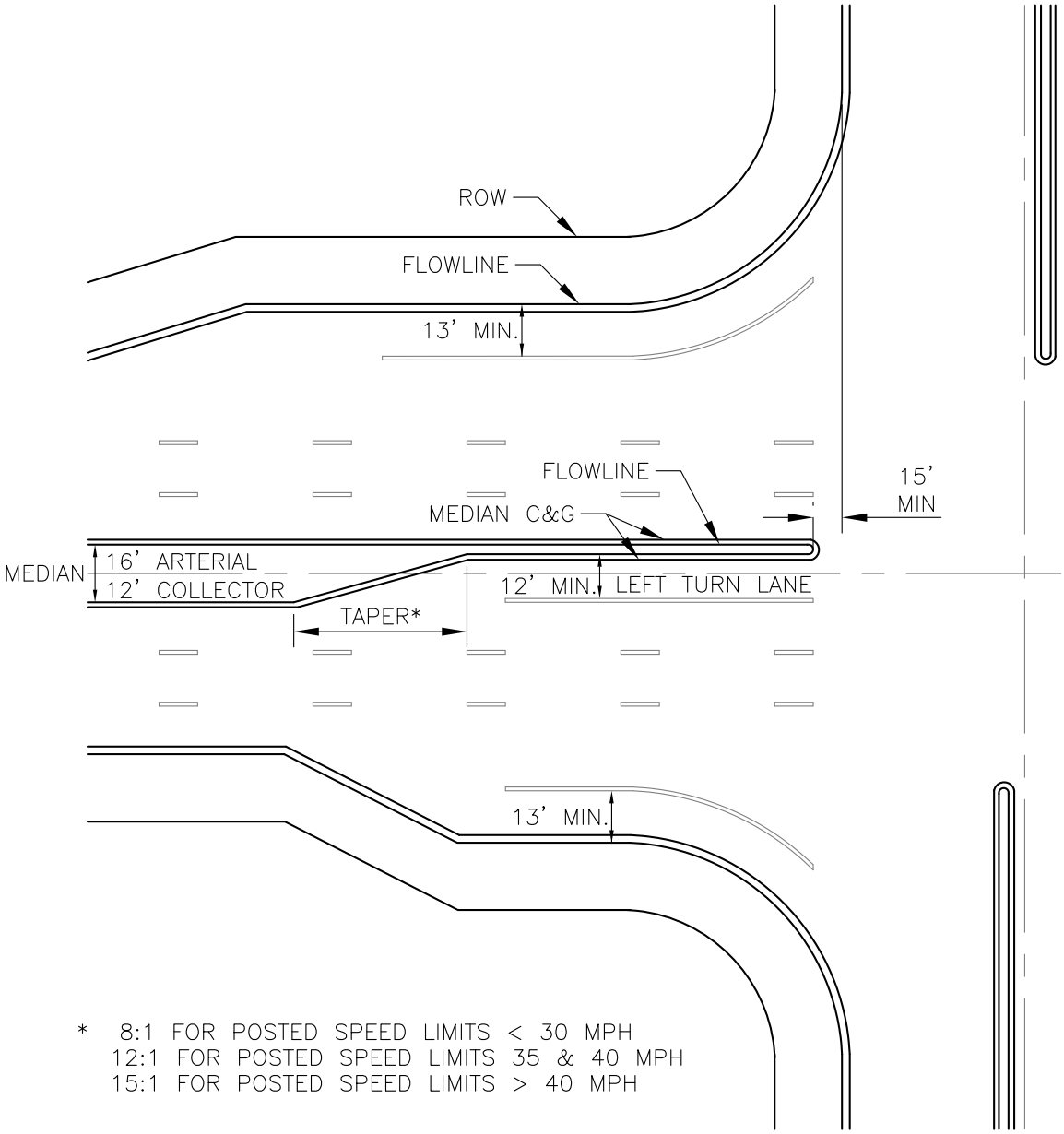

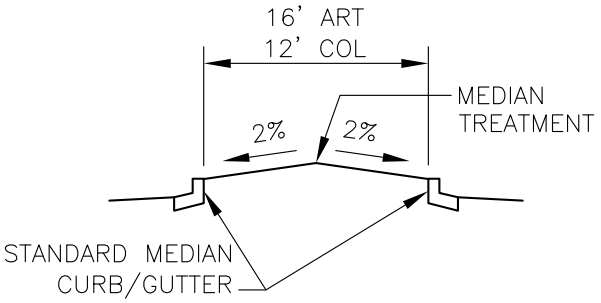

NOTES:

1. TOP OF CURB TO BE LEVEL, INCLUDING DURING SUPERELEVATION. AT LEFT TURN LANES THERE WILL BE A VERTICAL DIFFERENCE BETWEEN THE TWO MEDIAN CURBS IN ORDER TO PROVIDE A TWO PERCENT (2%) CROSS SLOPE IN THE TURN LANE. ANY OTHER VERTICAL OFFSET IN THE TWO MEDIAN CURBS SHALL NEED TO BE APPROVED BY THE TOWN.

2. MEDIANS TO BE PAVED (DECORATIVELY TREATED CONCRETE) OR LANDSCAPED. MEDIAN TREATMENT TO BE APPROVED BY THE TOWN.

		DATE: DEC 2013
Town of Superior — Gateway to Boulder Valley©	ROADWAY DESIGN STANDARDS	STANDARD DRAWING
	STANDARD MEDIAN	48

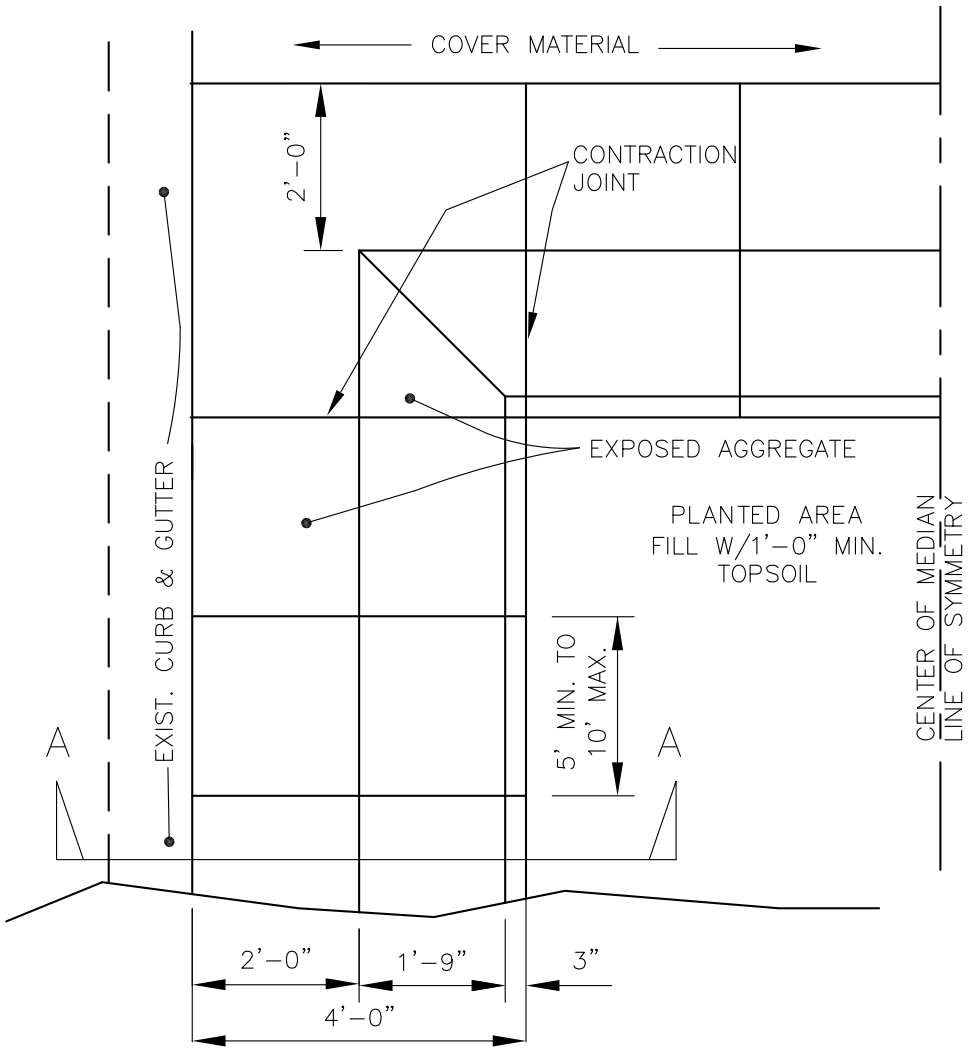

PLAN

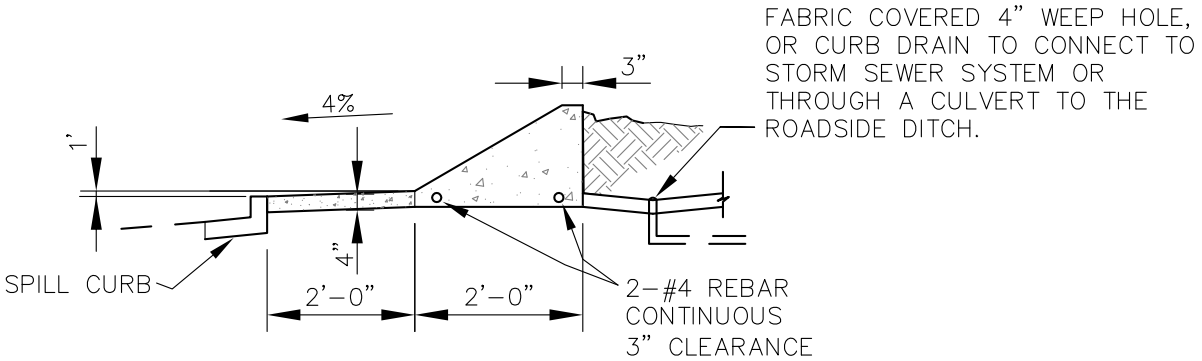

SECTION A-A

		DATE: DEC 2013
Town of Superior — Gateway to Boulder Valley©	ROADWAY DESIGN STANDARDS	STANDARD DRAWING
	MEDIAN PLANTER	49

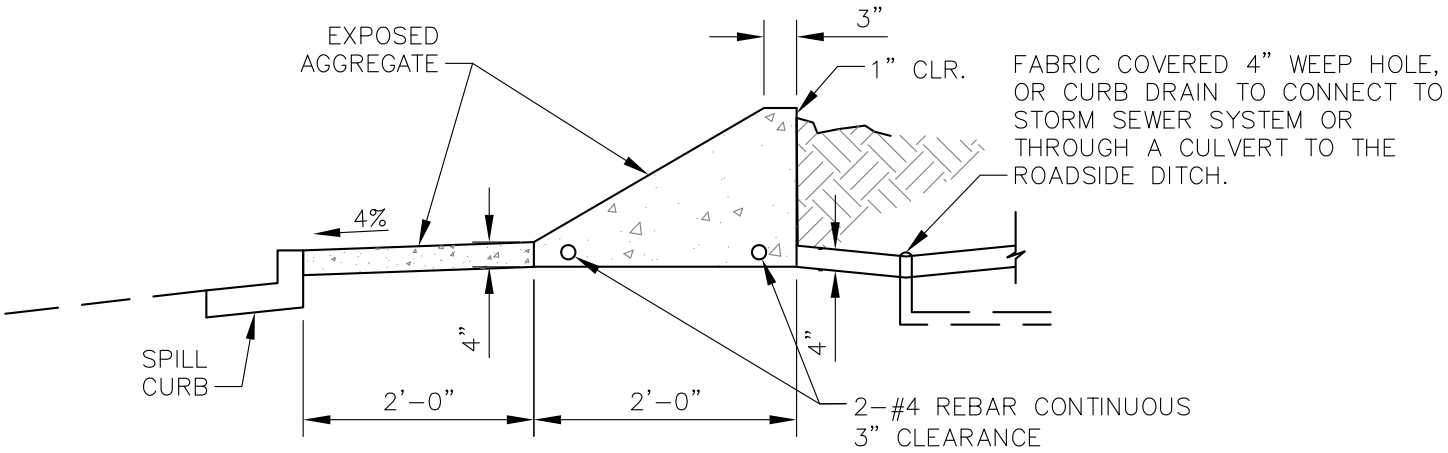

THERE IS NO SETBACK REQUIREMENT FOR MEDIAN LANDSCAPING IF THE SLOPED PAVING DETAILS SHOWN HERE ARE USED.

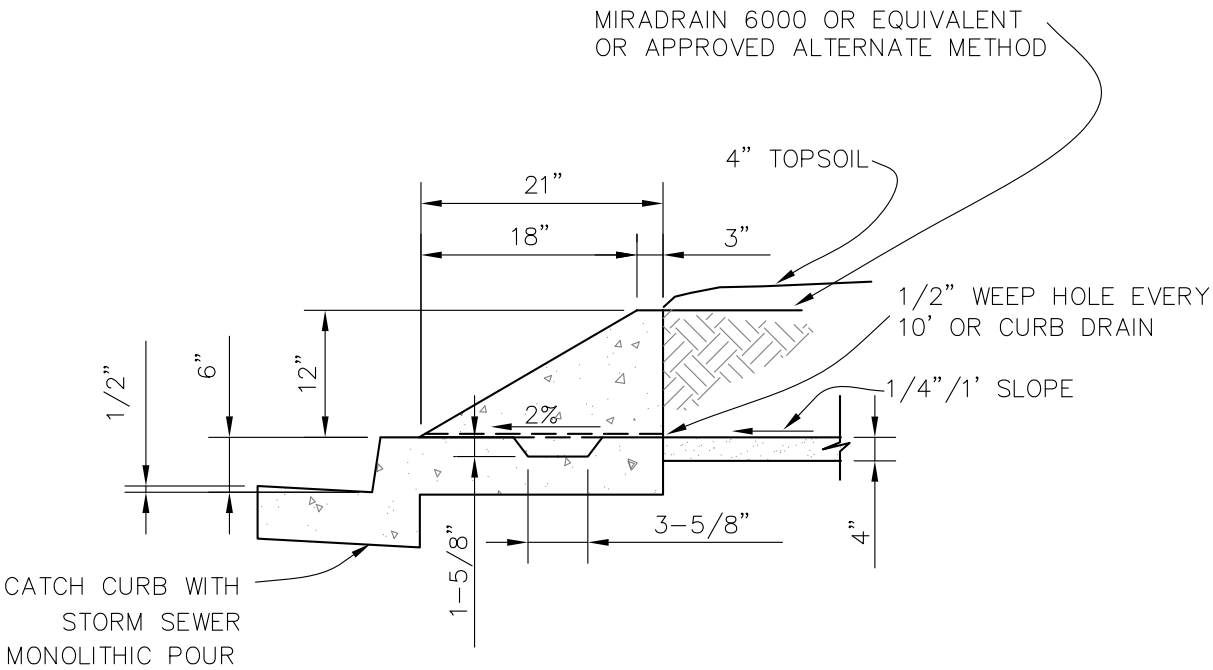

		DATE: DEC 2013
Town of Superior — Gateway to Boulder Valley©	ROADWAY DESIGN STANDARDS	STANDARD DRAWING
	MEDIAN PLANTER	50

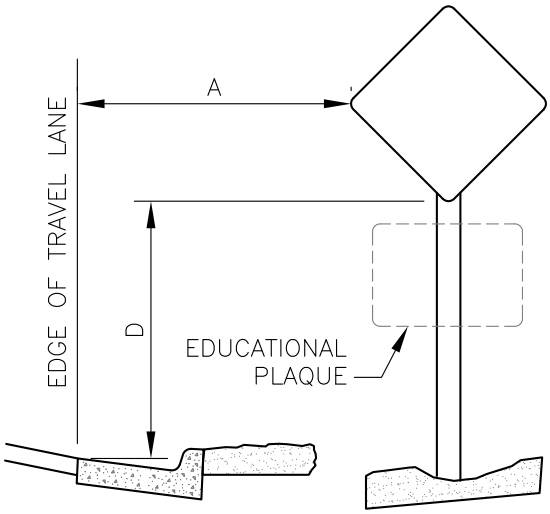

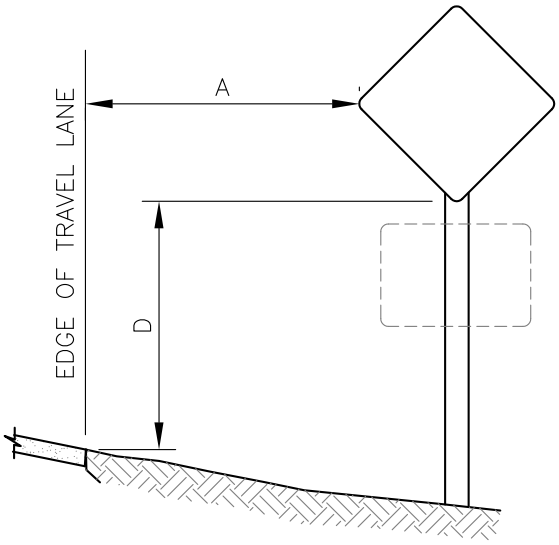

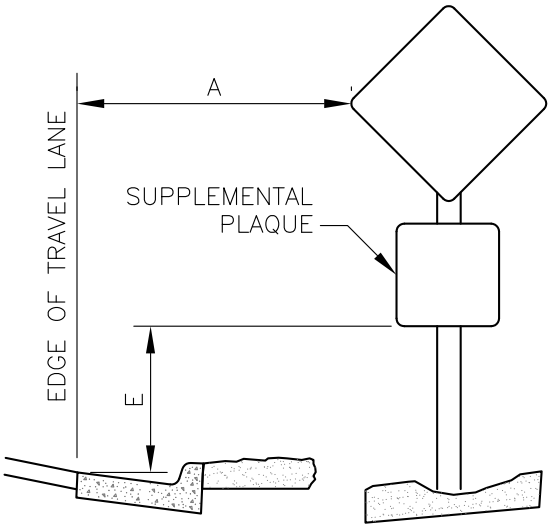

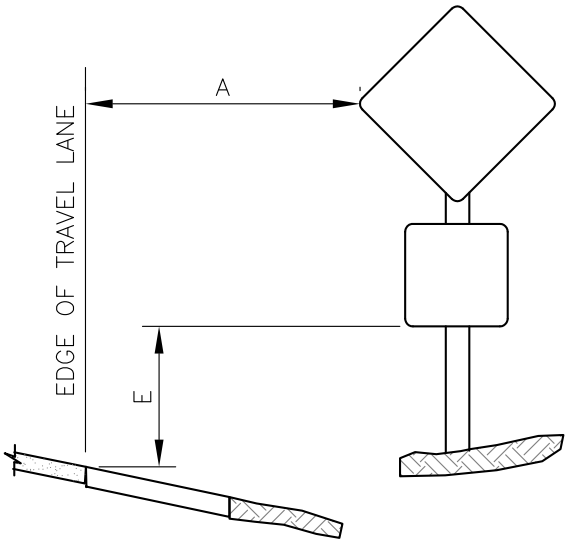

NOTE: SEE STANDARD DRAWING 52 FOR DIMENSIONS A, D, & E

WARNING SIGN PLACEMENT

		DATE: DEC 2013
Town of Superior — Gateway to Boulder Valley©	ROADWAY DESIGN STANDARDS	STANDARD DRAWING
	SIGNAGE	51

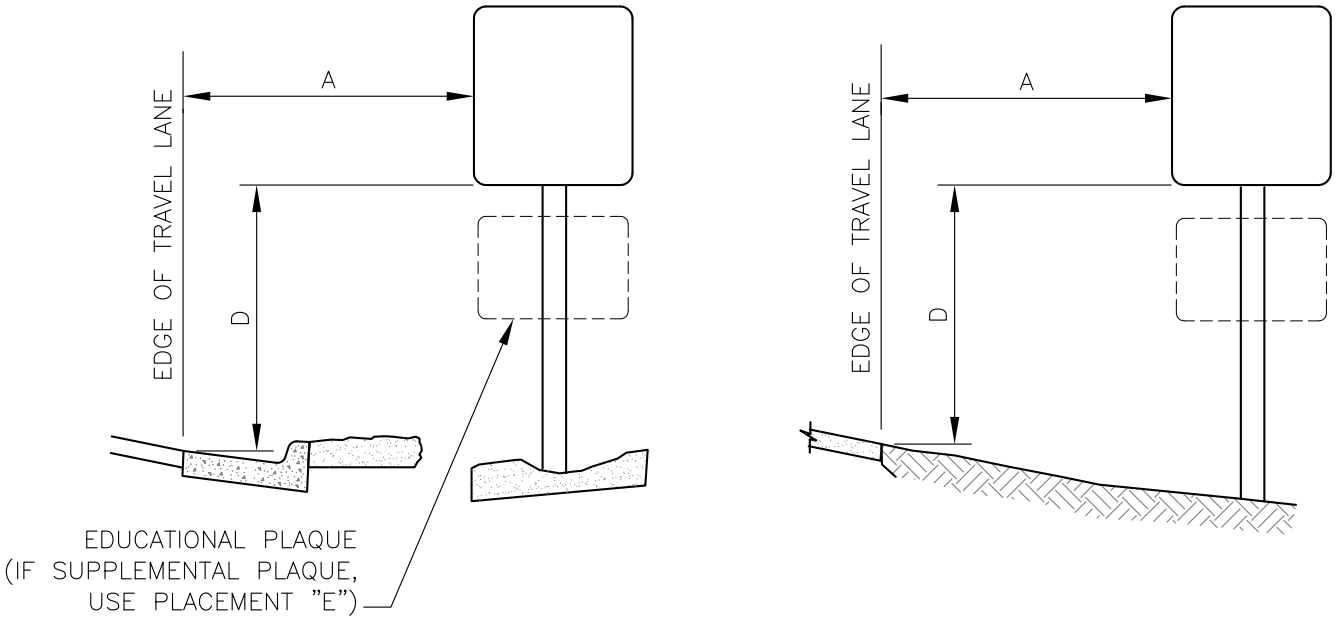

REGULATORY SIGN PLACEMENT

LATERAL PLACEMENT				
	LOCAL STREETS		COLLECTORS & ARTERIALS	
KEY	MINIMUM	NORMAL	MINIMUM	NORMAL
A	8'–0"	12'–0"	10'–0"	14'–0"

VERTICAL PLACEMENT (MINIMUM)				
	URBAN		RURAL	
KEY	WITH SIDEWALKS	W/O SIDEWALKS	WITH SIDEWALKS	W/O SIDEWALKS
D	7'–0"	7'–0"	N/A	5'–0"
E	7'–0"	6'–0"	N/A	4'–0"

		DATE: DEC 2013
Town of Superior — Gateway to Boulder Valley©	ROADWAY DESIGN STANDARDS	STANDARD DRAWING
	SIGNAGE	52

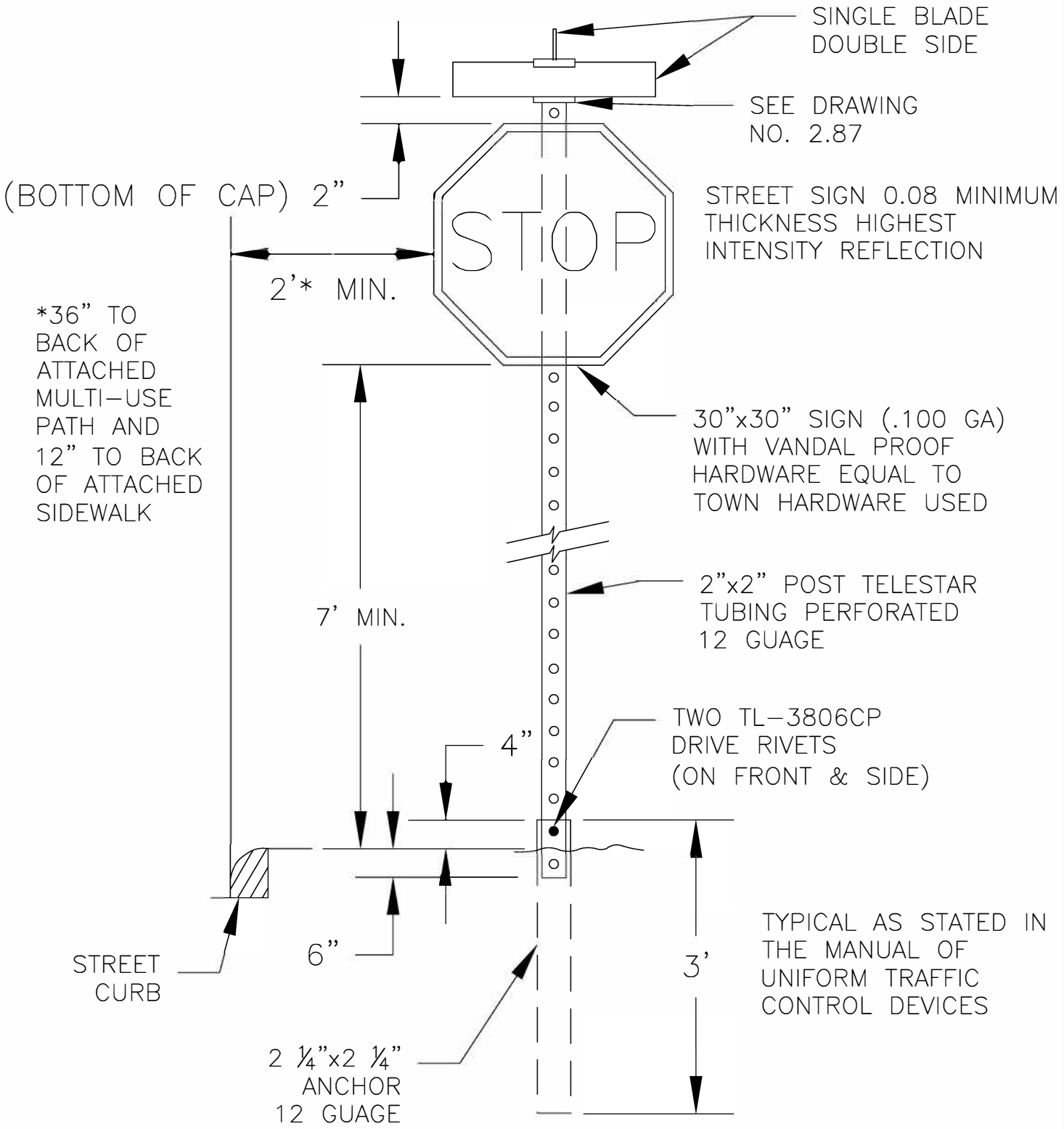

THESE DETAILS ARE PROVIDED FOR STANDARDIZATION PURPOSES ONLY. THIS DETAIL REPRESENTS MINIMUM DESIGN STANDARDS WHICH MAY REQUIRE UPGRADING FOR SPECIFIC APPLICATIONS.

		DATE: JUL 2016
Town of Superior	ROADWAY DESIGN STANDARDS	STANDARD DRAWING
	SIGN INSTALLATION	53a

Town of Superior Street Name Sign Standards

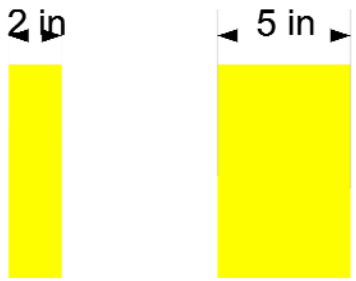

**Above 25 mph sign height shall be increased to 9 inches and all other dimensions increased by 33% to maintain proportions

SINGLE BLADE DOUBLE SIDE
0.08 MINIMUM THICKNESS
HIGHEST INTENSITY REFLECTION

36"x6" HIP/G

36"x6" HIP/G QTY 3

30"X6" HIP/G

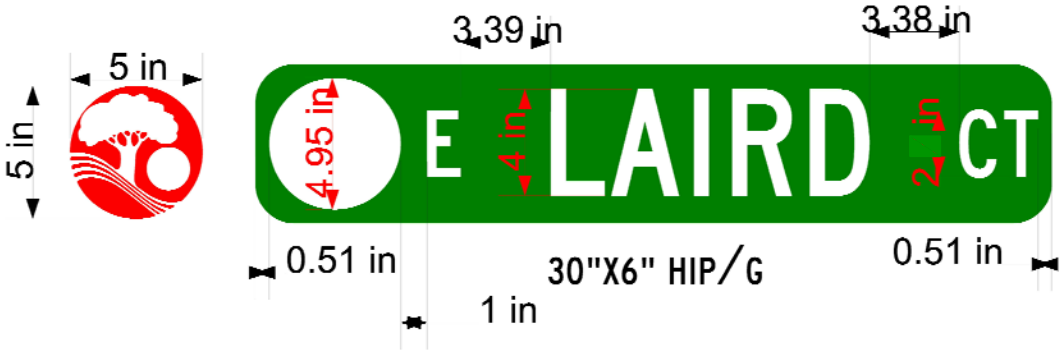

30"X6" HIP/G

THESE DETAILS ARE PROVIDED FOR STANDARDIZATION PURPOSES ONLY. THIS DETAIL REPRESENTS MINIMUM DESIGN STANDARDS WHICH MAY REQUIRE UPGRADING FOR SPECIFIC APPLICATIONS.

		DATE: JUL 2016
Town of Superior	ROADWAY DESIGN STANDARDS	STANDARD DRAWING
	STREET NAME SIGNS	53b

NOTE:

ALL 9" STREET NAME SIGNS SHALL BE OF EXTRUDED ALUMINUM ALLOY 6065–T6, OR APPROVED EQUAL. .08" OR GREATER THICK WEB WITH .250" THICK EDGES. THEY SHALL BE DOUBLE–SIDED SINGLE BLADE WITH HIGH INTENSITY REFLECTION.

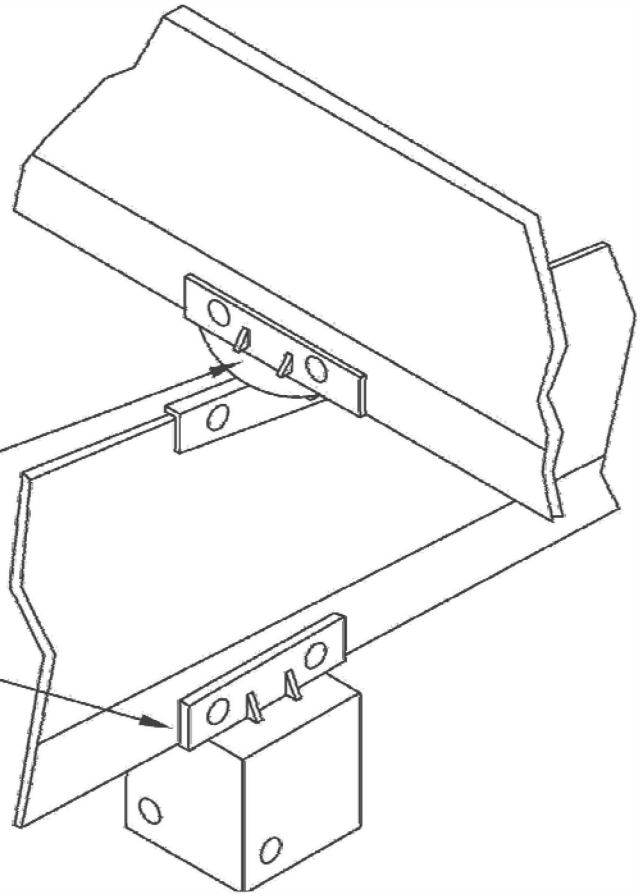

ALL HARDWARE CONSISTANT WITH EXISTING TOWN MATERIALS

THESE DETAILS ARE PROVIDED FOR STANDARDIZATION PURPOSES ONLY. THIS DETAIL REPRESENTS MINIMUM DESIGN STANDARDS WHICH MAY REQUIRE UPGRADING FOR SPECIFIC APPLICATIONS.

		DATE: JUL 2016
Town of Superior	ROADWAY DESIGN STANDARDS	STANDARD DRAWING
	STREET NAME SIGN MOUNTING	53c

T-INTERSECTION

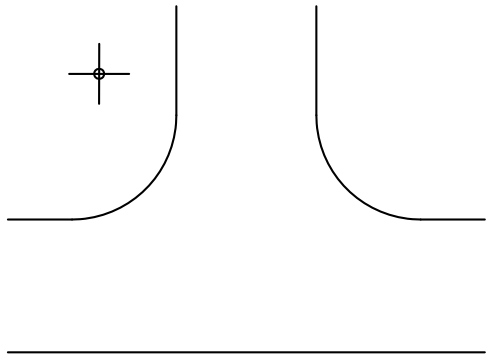

ASSEMBLY MUST BE PLACED AT THIS LOCATION.

LOCAL-COLLECTOR STREET INTERSECTION

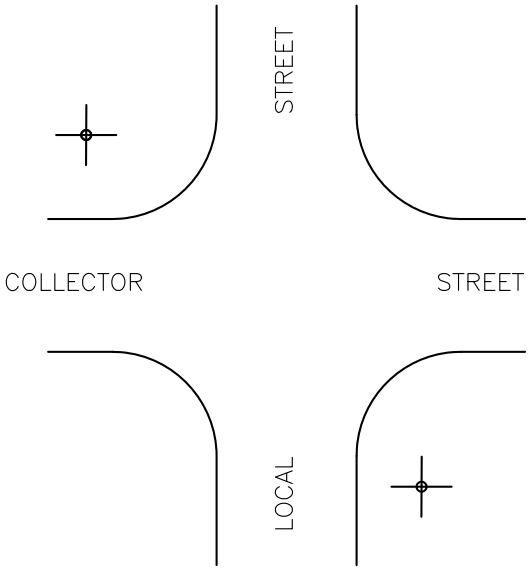

LOCAL-LOCAL STREET INTERSECTION

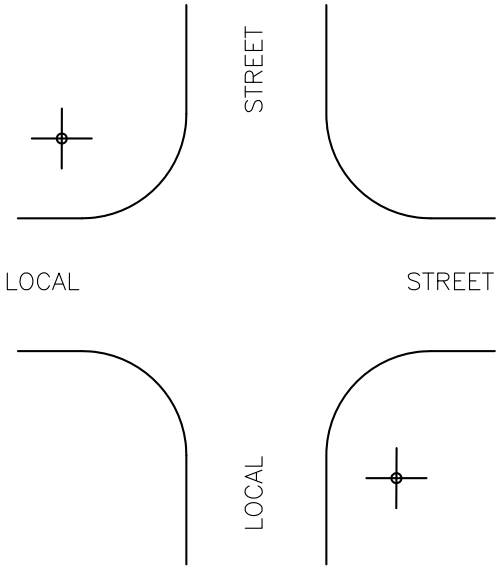

NOTE:
REFER TO THE MOST RECENT EDITION OF THE MANUAL OF UNIFORM TRAFFIC CONTROL DEVICES FOR ADDITIONAL INFORMATION.

STREET NAME ASSEMBLY LOCATIONS

		DATE: DEC 2013
Town of Superior — Gateway to Boulder Valley©	ROADWAY DESIGN STANDARDS	STANDARD DRAWING
	STREET NAME SIGNAGE LOCATIONS	54

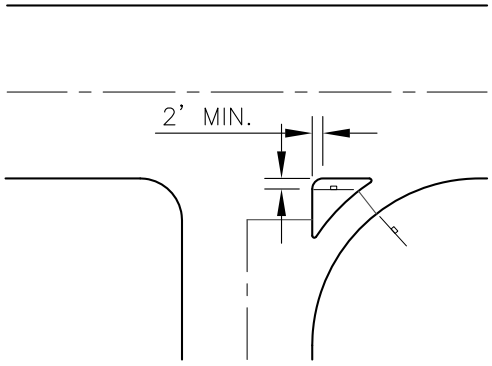

CHANNELIZED INTERSECTION

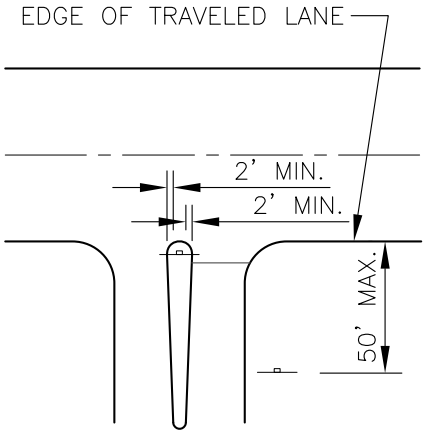

DIVISIONAL ISLAND

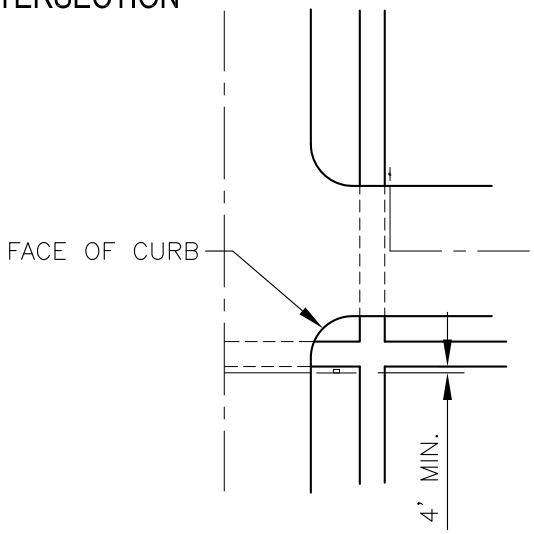

URBAN INTERSECTION

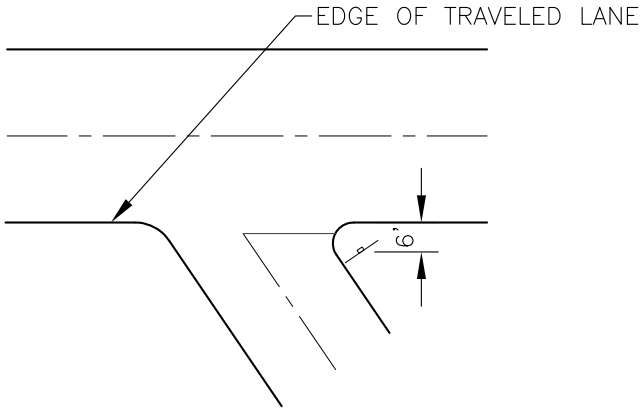

ACUTE ANGLE INTERSECTION

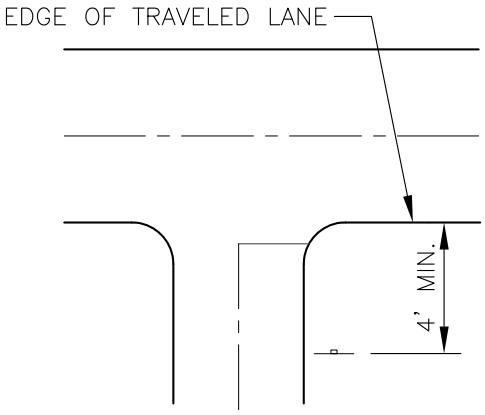

WIDE THROAT INTERSECTION

NOTE:
REFER TO THE MOST RECENT EDITION OF THE MANUAL OF UNIFORM TRAFFIC CONTROL DEVICES FOR ADDITIONAL INFORMATION.

TYPICAL LOCATIONS - STOP SIGNS AND YIELD SIGNS

		DATE: DEC 2013
Town of Superior — Gateway to Boulder Valley©	ROADWAY DESIGN STANDARDS	STANDARD DRAWING
	STOP OR YIELD SIGNAGE LOCATIONS	55

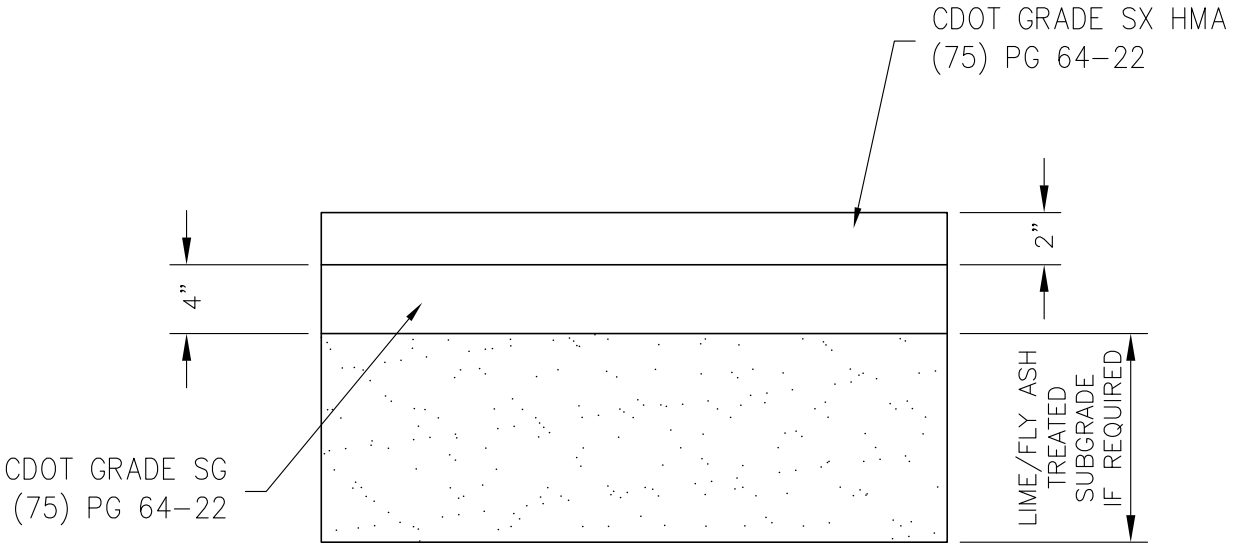

Min. 6" Pavement Section

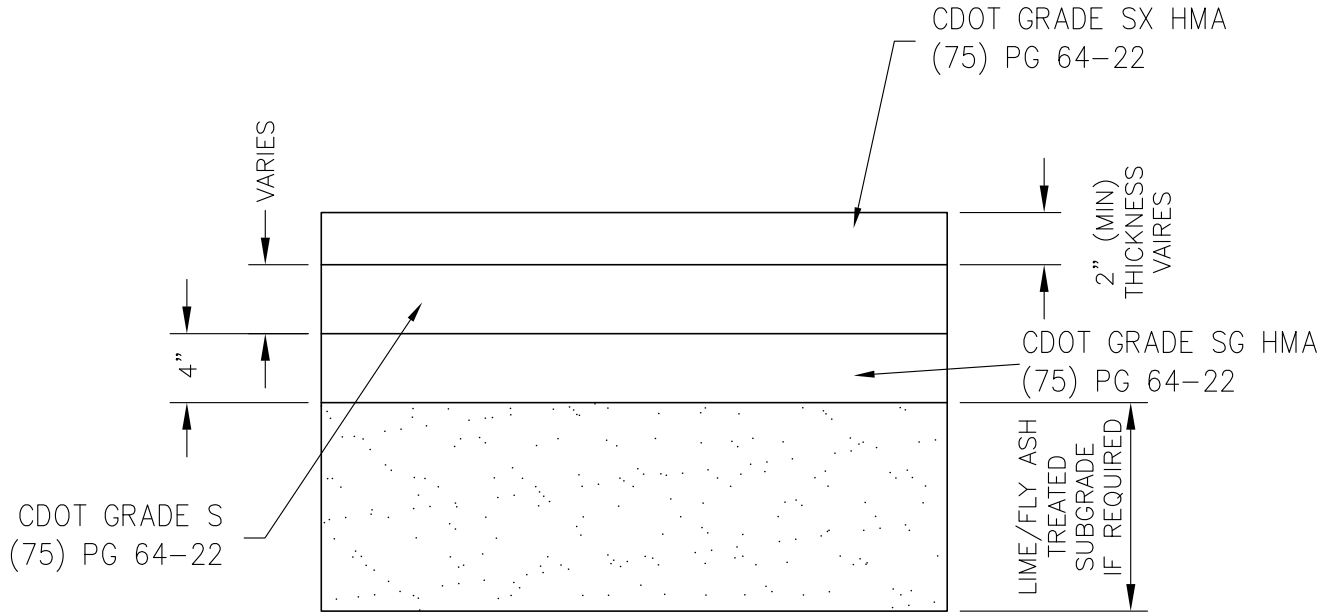

Greater Than 6" Pavement Section

		DATE: DEC 2013
Town of Superior — Gateway to Boulder Valley©	ROADWAY DESIGN STANDARDS	STANDARD DRAWING
	ROADWAY SECTIONS	56